BANDIT
HAND-FED CHIPPERS

OPERATING & PARTS MANUAL

INTIMIDATOR™ 15XP / 1390

Model No: **INTIMIDATOR 15XP / 1390**

Serial No: _____

Engine Make: _____

Serial No: _____

Clutch Make: _____

Model: _____ S/N _____

DEALER:

Name: _____

Address: _____

City/State: _____

Phone No: _____

Delivery Date: _____

Copyright 9/18

ATTENTION:

Depending on what replacement parts you are ordering, we will need the following information:

CHIPPER COMPONENTS	ENGINE COMPONENTS	CLUTCH COMPONENTS
Serial Number	Brand	Brand
Model Number of Chipper	Engine Serial Number	Clutch Serial Number
	Engine Model Number	Clutch Model Number

Bandit INDUSTRIES, INC.
6750 Millbrook Rd. • Remus, MI 49340 • 1-989-561-2270

MANUFACTURED BY BANDIT INDUSTRIES, INC
PHONE: (989) 561-2270
PHONE: (800) 952-0178 IN USA
FAX: (989) 561-2273 ~ SALES DEPT.
FAX: (989) 561-2962 ~ PARTS/SERVICE
WEBSITE: www.banditchippers.com

CALIFORNIA PROPOSITION 65

⚠ WARNING

Breathing diesel engine exhaust exposes you to chemicals known to the State of California to cause cancer and birth defects or other reproductive harm.

- **Always start and operate the engine in a well-ventilated area.**
- **If in an enclosed area, vent the exhaust to the outside.**
- **Do not modify or tamper with the exhaust system.**
- **Do not idle the engine except as necessary.**

For more information go to:
www.P65warnings.ca.gov/diesel

⚠ ADVERTENCIA

Respirar gases de escape de motores diesel le expone a químicos conocidos por el estado de California como causales de cáncer y defectos congénitos u otros daños reproductivos.

- **Siempre encienda y opere el motor en áreas bien ventiladas.**
- **Si está en un área cerrada, ventile escape hacia el exterior.**
- **No modifique ni altere el sistema de escape.**
- **No deje el motor en ralentí a no ser que sea necesario.**

Para mayor información visite:
www.P65warnings.ca.gov/diesel

SPW-46 8/18

⚠ WARNING
⚠ ADVERTENCIA

Cancer and Reproductive Harm

Cáncer y daño reproductivo

www.P65warnings.ca.gov

SPW-47 8/18

DANGER

ACCIDENTS INVOLVING BRUSH CHIPPERS CAN AND SHOULD BE PREVENTED...

Operator training and enforcement of safety policies are

ESSENTIAL!

⚠ DANGER

READ, UNDERSTAND AND FOLLOW ALL SAFETY RULES AND INSTRUCTIONS

This safety booklet describes important safety features on Brush Bandit® Chippers. This booklet involves safety for your employees and the chipper. The safety features are available as update kits for older chippers and can be obtained for very little expense. If you have chippers that Do Not have any of these - Add them to your chipper now.

If you have purchased a Brush Bandit® Chipper second hand, know someone that has, or have resold a Brush Bandit® Chipper - please contact us. Please fax us at (989) 561-2273 or e-mail us at www.banditchippers.com with the chipper model number, chipper serial number, and current owners name, address, etc. We need to know them and we want them to know us. Your assistance is greatly appreciated.

Make sure your chipper operators have been properly trained, and have read, understand, and follow safety and operational procedures contained in the manuals, on the chipper itself, on decals, in this booklet, and the video. These devices can be obtained through your local Bandit® dealer. To find your closest dealer, look in the yellow pages, look on our web page (www.banditchippers.com), or call 800-952-0178 or 989-561-2270.

Most, if not all, chipper related accidents are caused by operator negligence. A lack of proper and ongoing training and lack of enforcement of safety policies significantly increase the opportunity for operator error.

Many companies involved in tree care or tree maintenance have weekly meetings to review potential hazards and discuss how accidents can be avoided. These meetings are a benefit to new inexperienced employees, and also remind experienced employees of the obvious dangers involved with tree work. Even experienced employees may be injured if they mistakenly believe they fully understand the machine, yet take unnecessary chances.

Industry leaders agree that safety should be at the top of everyone's priority list. Employees need constant reminders not to become over confident and not to take a casual approach to the potential hazards they encounter on a daily basis. Improperly operating a brush chipper is very dangerous. The operator must be trained and warned that amputation and death can happen unless they follow all warning instructions. They must also always be in position and ready to operate feed controls if a dangerous situation should arise.

Bandit Industries, Inc. provides numerous decals on our chippers, safety instructions in operator manuals, and videos to warn operators of hazards involving the use of the chipper. Additionally, we endeavor to provide safety features on the machines to help prevent possible accidents when operators become careless and neglectful.

The Brush Bandit® Chipper was introduced in 1983. Since then there have been several accidents in the feed wheel area involving hands, arms, feet, and legs, some of which have resulted in death. These injuries are caused by operators who improperly reach or kick into the chipper feedwheels. An operator reaches or kicks into the feedwheels when he or she feels a need to push small twigs, leaves, etc. into the feedwheels or to dislodge a piece of material in the machine. DO NOT reach or kick into the infeed hopper under any circumstances!

⚠ DANGER

NEVER REACH INTO THE INFEED HOPPER.

Operators must be trained to be constantly thinking about being in a position and ready to use the forward-off-reverse feed control bar and other controls. They should be thinking and ready to stop or reverse the feed control bar the instant they feel any pulling toward the infeed hopper or feedwheels. It is very easy to activate the control when the operator is properly positioned, to stop or reverse the feedwheels, especially if they are properly trained and paying attention.

It is difficult to activate the forward-off-reverse feed control bar if the operator is bent over, reaching into the infeed hopper of the chipper. In this position the operator is past the feed control bar, and in a very unsafe situation requiring him/her to reach back and contact the control bar to stop or reverse the feedwheels. The operators manual, video, and decals (located several places on chipper) state; "never put feet or hands into the infeed hopper for any reason".

If you have short pieces of wood, leaves, or twigs simply lay them on top of longer material while it is feeding into the chipper. You can also use the wooden pusher tool. Do not feed vines or vine type material into the chipper. Cut the vines into 4 to 5 foot lengths and lay them on top of longer material while it is feeding into the chipper. With the vine material at this length, stop the feedwheels and lay the 4 to 5 foot pieces in the infeed hopper, then they should be fed with the wooden pusher paddle. If you can't cut the vines to this length, don't feed it into the chipper. Never put feet or hands into the infeed hopper for any reason! Always be positioned and ready to operate control handle.

Always stand to the side of the infeed hopper when inserting material. This will allow you to turn away from the wood, and walk away, without passing through the material. Feeding from the side also positions the operator further from the feedwheels.

If you or your employees are not following these instructions, a very serious accident could occur. There is no such thing as a "minor accident" if an operator gets into the feedwheels. Severe lacerations, amputations, or even death can occur.

⚠ DANGER

NEVER REACH INTO THE INFEED HOPPER.

Do not let this happen to you or your employees. Follow correct operating instructions. There have been several accidents that involved foot amputations, leg amputations, and death as a result of operators kicking into the infeed hopper of the chipper. Brush chippers are designed to be operated with hands placing the material into the chipper - NOT FEET! If the operator kicks the material that has become lodged or is not going into the feedwheels, he or she is placing themselves in extreme danger. If the wood does free up and goes into the feedwheels, the operator can be thrown off balance. NEVER KICK OR PLACE A FOOT IN THE CHIPPER INFEED HOPPER! Use a wooden push paddle to feed light, loose, wood material such as twigs, leaves, etc. or when job is done you can shut off everything, sweep up everything, and throw it in the chip box or pile. If the wood material becomes lodged and stops feeding, back it out, and turn it to a better position or trim it with a chain saw. Then, re-feed it into the chipper. NEVER FIGHT WITH THE WOOD TO GET IT TO ENTER THE CHIPPER!

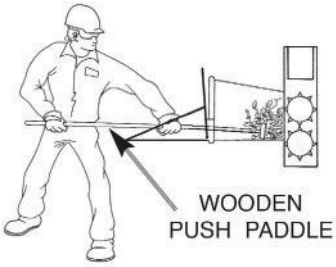

Bandit Industries, Inc. continues looking into what can be done to reduce chipper injuries. The following safety features have been developed for, and are currently being used on Brush Bandit® Chippers. They are available from your local Bandit® Dealer. Some are new and some have been presented before. We urge you to update your chippers with these devices.

To update your chippers, you must supply chipper models and serial numbers of every unit where you are installing these very important safety features. Safety devices available vary between "Hand Fed" and "Loader Fed" Chippers.

When you supply chipper model and serial number, these kits are available from your local Bandit® dealer.

⚠ SAFETY FEATURE

WELD ON INFEED PAN EXTENSION

Update Kit # UK-1007
"WELD-ON INFEED EXTENSION PAN"

Update Kit # UK-1014
"12" EXTENSION FOR 18" PAN"

You must supply the chipper model number and chipper serial number when ordering, to ensure an accurate fit of the weld-on pan or pan extension. Also supply the inside width dimension of the inlet end of the infeed hopper or existing 18" deep folding infeed pan. Folding infeed pans were optional on Bandit Chippers for many years. The 18" deep infeed pan became standard equipment on Bandit hand-fed chippers in February 1994. The 30" deep folding infeed pan became standard in January 2000. If your chipper is not equipped with the pan device that extends the infeed hopper 30", one of these two weld-on kits would apply. They are simple to install. The purpose is to help locate the chipper operator further from the feedwheels; in the event he/she negligently reaches toward the feedwheels. THERE IS NO NEED TO REACH OR KICK INSIDE THE INFEED HOPPER AREA. It is foolish, negligent, and extremely dangerous. DO NOT DO IT! DON'T use your foot to push material inside the infeed hopper. ALWAYS be in a position and ready to quickly activate the forward-neutral-reverse feed control bar whenever you are near the infeed hopper. "Stop To Think" BEFORE you put your hand, foot, or body in a dangerous position - and then DON'T DO IT!

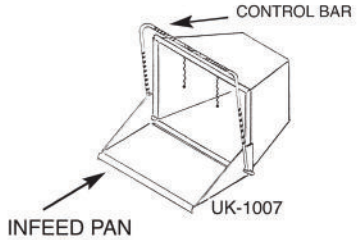

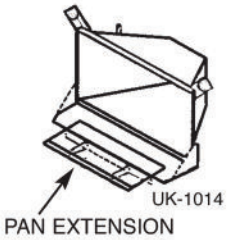

⚠ SAFETY FEATURE

WOODEN PUSH AND PADDLE MOUNT

Update Kit # UK-1008
"WOODEN PUSH PADDLE AND MOUNT"

The "Wood Push Paddle and Mount" have been standard equipment on our hand fed chippers since March 21, 1994. The wooden push paddle, if used correctly, is intended to reduce the chance of a negligent operator disregarding correct procedures, and using his/her foot or hand to push small wood debris in the infeed hopper area. The wooden push paddle allows the operator to safely push materials from outside the infeed hopper.

The wooden push paddle can also be used to push wood that may be hung up in the feedwheels. If the hang up can not be dislodged by the wooden push paddle, a foot or hand won't help either. Do Not use steel or shovels or rakes. Reverse the material and trim it down,or shut down the chipper, wait as many minutes as it takes for everything to completely stop and dislodge the material using safety procedures. Have you heard reports or seen operators bending over and reaching way back into the infeed hopper, near the feedwheels? Have you seen or heard of your employees using their foot to kick or push material that is inside the infeed hopper? If either answer is yes, think how important the wooden push paddle can be to discourage reaching or kicking into the feedwheels. The wooden push paddle can be ordered through the Bandit® dealer:

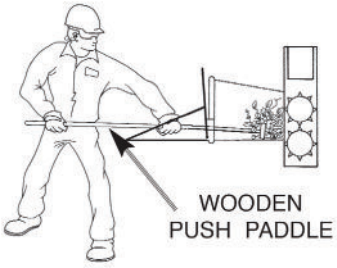

#980-0507-42
19" Wide Paddle

#981-1005-30
22" Wide Paddle

⚠ SAFETY FEATURE

SPRING LOCK FOR HOOD PIN

Update Kit # UK-1009
"SPRING LOCK FOR HOOD PIN"

Since November 1996 Bandit Industries, Inc. has been installing on our hydraulic feed disc chippers a patented spring lock device for the hood pin. If properly maintained the device prevents the hood pin from being removed when the chipper disc is turning. The spring pin is positioned in front of a collar on the hood pin and when the hood pin is secured in place the hood is kept closed. While the disc is turning, the spring lock pin prevents the hood pin from being removed. The disc and disc shaft must stop turning to recess the spring lock pin and remove the hood pin. Do Not open the chipper hood with the chipper disc turning. Do Not run the chipper with the hood open. Do Not close the hood with the chipper disc turning. Do Not operate without a factory approved chipper hood pin system securely in place, and padlocked.

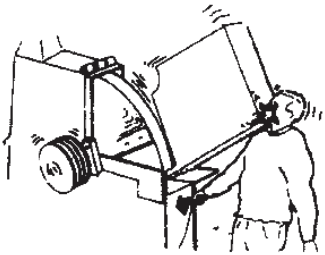

⚠ SAFETY FEATURE

CHIPPER HOOD ENGINE DISABLE PLUG

Update Kit # UK-1010
"CHIPPER HOOD ENGINE DISABLE PLUG"

Since September 1998 mechanical feed hand fed Bandit® Chippers have been built with a plug-in device on the chipper hood that disables the engine if the hood pin is not properly in place holding the chipper hood in the closed position. Correctly installed and maintained, the engine will not start or it will shut off if the plug-in is disconnected. The chipper hood must NEVER be opened, or pushed closed if the disc/drum is turning.

When you supply the chipper model and serial number, this kit is available through your local Bandit® dealer. You also need to supply us with the engine make and model, then we will include the electric schematic to wire the device into the engine system.

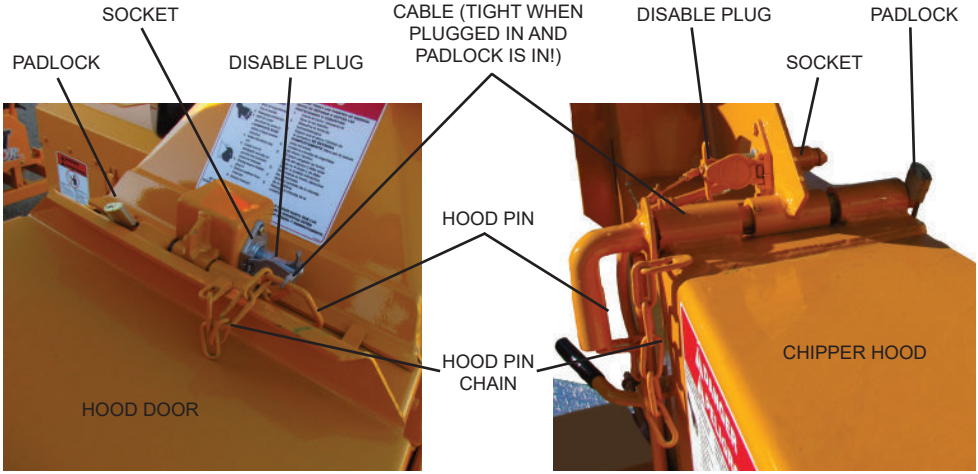

DRUM CHIPPER

DISC CHIPPER

SAFETY FEATURE

LAST CHANCE STOP

Update Kit # UK-1011
"LAST CHANCE STOP"

Have you heard reports or seen your employees bending over and reaching into the infeed hopper, near the feedwheels? Along with the wooden push paddle and the infeed hopper tray, Bandit Industries, Inc. began installing on their mechanical feed hand fed chippers the patented "Last Chance Stop" cable system. This system has been standard on Bandit® Chippers since March 1997. This device was developed to provide an emergency shut-off/reverse for the hydraulic feedwheels on most hand fed chippers, and operates without any electric parts. The system typically consists of two simple cables hanging inside the infeed hopper and in front of the feedwheels approximately halfway between the entrance of the infeed hopper and the feedwheels.

If an operator incorrectly finds themselves past the feed control bar and inside the infeed hopper, he/she has a cable to reverse/stop feedwheels and wood flow.

The "Last Chance Stop" is Not installed to encourage an operator to reach into the infeed hopper. Operators should never reach into that area with hands or feet. If your operator gets into a situation that the safety cable needs to be pulled, they have been operating the chipper in an unsafe manner contrary to all safety instructions. The system must be properly maintained and periodically checked. The "Last Chance Stop" will do nothing for the negligent operator kicking into the infeed hopper.

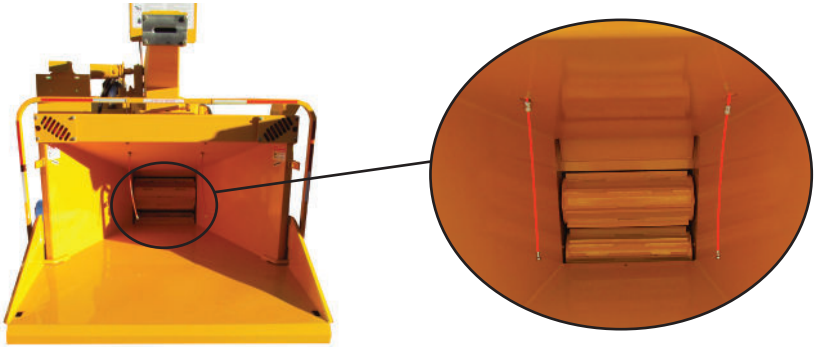

SAFETY FEATURE

HOOD LOCK PIN WITH ATTACHING CHAIN

Update Kit # UK-1012
"HOOD LOCK PIN WITH ATTACHING CHAIN"

Brush Chippers have been involved in a number of hood related accidents over the years. Some have resulted in death! All known hood accidents happened because the factory installed solid steel pin joining the hood halves was removed and the disc was spinning when the chipper hood was opened or being closed. Do Not open the chipper hood with chipper disc/drum turning. Do Not close the hood with chipper disc/drum turning. Do Not run the chipper with the hood open. Do Not operate without the factory approved chipper hood pin system securely in place.

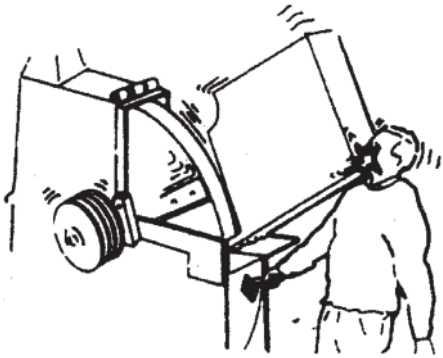

The Hood Pin has to be in place to do what it was designed to do.

Hood pins and associated parts like padlocks, engine disable plug, and spring lock for the hood pin are all available from Bandit® Dealers.

Do Not attempt to remove the hood pin or open chipper hood until the engine is shut off, you have waited as many minutes as it takes, and you can see, feel, and hear that the chipper disc/drum has stopped turning.

If the hood contacts a spinning chipper disc/drum it can suddenly fly open and severely injure or kill you.

Make-shift replacement pins don't work and are dangerous. Use the correct size factory approved pins.

SAFETY FEATURE

FEED CONTROL BAR

FEED CONTROL BAR

Brush Bandit® Chippers that are designed to be hand fed have a simple, easy to reach feed control bar located across the top and down both sides of the infeed hopper. The feed control bar operates the feedwheels forward-neutral-reverse pulling, stopping, and reversing the wood branches into the chipper. The operator must always be thinking, ready, and in position to reverse the wood flow if a dangerous situation should arise. Push the control bar away from the operator (toward chipper) to reverse wood flow on all chippers that are designed for hand feeding.

Keep the control handle serviced, and properly operational at all times. If something gets hung up in the chipper feed system, reverse it back out. Reposition the material and re-feed it back into the infeed hopper. If the wood material is too big or limby, back it out, trim it, and re-feed it in portions. NEVER fight or wrestle with limbs or branches! Forcing material into the chipper is an unsafe practice. When you supply the chipper model and serial number, replacement feed control bars are available at your Bandit® dealer.

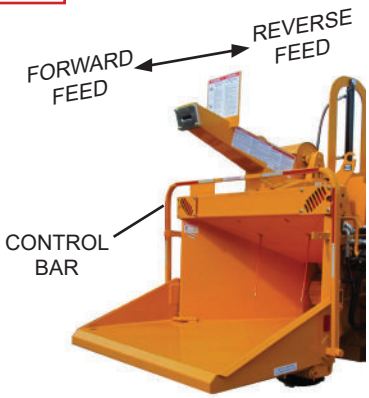

SAFETY FEATURE

ROPE / LINE SHEAR BAR

Update Kit # UK-1039
"ROPE/LINE SHEAR"

The "Rope/Line Shear" can be added to the chipper drum housing to shear or deflect either winch line or climbers' rope should either accidently enter the rotating knives in the chipper housing, in order to prevent it from further being wrapped around the chipper drum. The device can offer an improved chance that the line can be severed, detached, or deflected from the chipping system in an accident situation.

WARNING

HOOD HINGE AND HOOD REST

HOOD HINGE AND HOOD REST

The hood hinge and the hood pin are what holds the pivoting hood half in place. Both have to be properly and securely fitted and maintained. A loose or bent hinge could cause the hood to come in contact with the chipper disc/drum. IF A HOOD HINGE GETS SLOPPY OR CRACKED OR BENT, IT MUST BE REPLACED! Don't wait, replace it! The hinge is used for hood alignment and hood location security.

Don't slam the chipper hood open! It damages the hinge!

The hinge needs periodic lubrication to properly operate and to avoid excessive wear! The hinge, hood rest, and hood require scheduled inspection. If they are damaged, replace them! Use only a Bandit factory replacement part.

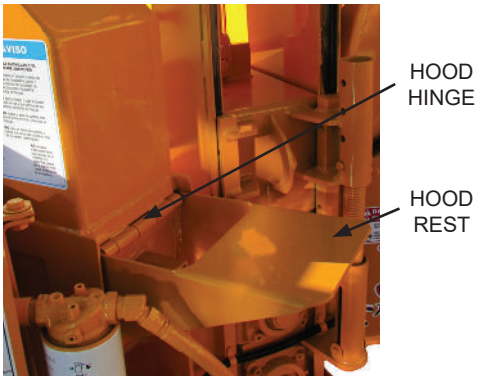

WARNING

CHIPPER KNIVES

CHIPPER KNIVES

You must use sharp, good quality chipper knives that have not been resharpened past the recommended width, per manual. Dull chipper knives are not only dangerous, but add to operating costs and slow production. Chippers Do Not feed or throw chips properly when the knives are dull. Operating with dull knives may cause the operator to push, kick, or wrestle with the wood going into the chipper which is unsafe. Dull knives make the chipper vibrate excessively, causing machine fatigue, damage, and the engine to use more fuel. Keep the knives sharp and the chipper will work smoother, feed wood easier, and make a safer operation. In the long run, sharp knives can save you money.

The chipper knives must be of good quality and the correct design for that model chipper. The knives must be properly hardened at the edge, annealed at the bolt holes, and the correct metallurgical composition. Improper knives may break and cause a dangerous and costly accident. Use only factory approved knives and mounting hardware from Bandit Industries, Inc.

Bandit Industries, Inc. offers through our dealers a unique knife sharpening device called "The Knife Saver Kit™" that within minutes can put a sharp edge back on a dulled chipper knife. The knife doesn't have to be removed from the disc or drum. Use The Knife Saver Kit™ on brand new knives, on freshly resharpened knives, every day during Daily Start-Up & Maintenance while the knives are checked, and when the machine is shut down for a break during the day. The Knife Saver Kit™ sells under part number 900-9901-68.

The kit includes the sharpener, protective glove, a touch-up file, and comes in a protective case. The Knife Saver Kit™ will not restore knives that are severely nicked or damaged, but will extend knife life before needing a professional knife grind.

PROCEDURE FOR UNPLUGGING YOUR CHIPPER

If your chipper is plugging, it is usually caused by allowing the engine to drop below required R.P.M.'s. This can be resolved by simply shutting the feedwheel(s) off when the engine begins to lug down. Operating the engine at speeds lower than full R.P.M.'s causes your chipper to plug. **Always run the chipper at full engine speed.** If your chipper is equipped with the optional autofeed feature, make sure it is set correctly. The setting for the low R.P.M. stop must be high enough not to allow the chipper discharge to plug. Dull chipper knives also contribute to chipper plugging. Dull knives can create slivers and chunks, causing the engine to lug excessively. Both of the aforementioned conditions cause a plugging situation.

⚠DANGER

If the chipper is properly maintained and operated correctly, the chipper should not plug. In the unlikely event that the chipper becomes plugged, do not attempt to clean out the discharge or chipper housing in the field. Take the machine to a local dealer or professional shop. If the machine is a rental, take it back to the rental company.

⚠DANGER

If the discharge or hood need to be removed, always use some sort of mechanical device like an overhead hoist, loader, lift truck, etc. that is rated for lifting that component. Follow all OSHA instructions for lifting.

⚠DANGER

Pinch points are created between the disc/drum and the housing for the disc/drum. Use a pry bar or wood bar to turn the disc/drum during the unplugging process. Do not use your hands to try to break free and turn a jammed disc/drum. The disc/drum could break free suddenly and your hand could become injured in the pinch point.

⚠DANGER

The knives are very sharp and can cause injury if you come in contact with the knives during the unplugging process.

STEPS TO FOLLOW WHEN UNPLUGGING YOUR CHIPPER

1. Before attempting any type of maintenance, disengage clutch, wait for the disc/drum to come to a complete stop, turn off engine, remove the ignition key, make sure the ignition key is in your possession, install the disc/drum lock pin, and disconnect the battery.
2. There should, also, be at least two people on site during maintenance and service procedures in case an accident should occur.
3. Make sure the chipper disc/drum is **NOT** turning and then open the hinged portion of the chipper hood.
4. Using gloved hands and some type of raking tool, dig the chips out of the chipper housing.
5. If the discharge chute is plugged, use a raking tool to pull the majority of chips out of the open outlet end of the chute. If the discharge chute needs to removed, use some sort of mechanical device like an overhead hoist, loader, lift truck, etc. that is rated to lift the discharge. Follow all OSHA instructions for lifting.
6. Never allow a person to turn the chipper disc/drum when someone else is working inside the chipper housing. More than likely, the chipper disc/drum will turn hard then loosen causing it to turn faster. If another person is anywhere near the chipper disc/drum, they may be injured.
7. Never turn the chipper disc/drum by hand. Always use a pry bar or wood bar. This will prevent the person turning the disc/drum from being injured should the disc/drum break loose.
8. Reinstall the discharge chute, mount securely and point it in a safe direction away from anything.
9. Never leave the chipper hood open and try to start the engine in order to engage the chipper disc/ drum to blow chips out of the housing, this is very hard on the P.T.O. of the chipper and may burn clutch plates. Also, the flying debris is very dangerous. An exposed chipper disc/drum turning very fast creates an unsafe condition. In other words, **DO NOT** start the chipper with the hood open because it is just too dangerous.
10. Once the disc/drum turns freely, close the chipper hood, insert the hood pin, install the padlock in the hood pin, reinstall the chipper hood engine disable plug, make sure the spring lock for hood pin springs back to the correct operating position on disc chippers, pick up all tools, make sure the chipper is free of all debris, start engine, properly engage clutch and throttle to full speed. Insert a small branch into the feedwheel(s). If the chips discharge properly, the chipper is clear and normal operation may resume.

DANGER

SAFETY CLOTHING AND APPAREL

It is essential that a chipper operator wears proper gloves, clothing, hard hat, face shield, hearing protection, safety glasses, etc. when operating a chipper. Don't wear gauntlet type gloves or loose improper clothing. Avoid wearing necklaces, rings, watches, and neckties while operating the equipment.

Follow the established "ANSI" and "OSHA" standards.

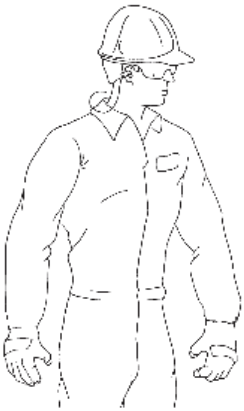

DANGER

REFLECTIVE STRIPED TAPE ON FEED CONTROL HANDLE

We began installing striped reflective tape on the feed control handle of our hand fed chippers. This tape is reflective, self adhesive, and has contrasting colors. The tape helps make the feed control bar stand out more and it makes the rear of the chipper more visible to a vehicle behind you while transporting the chipper. Striped tape can be obtained through your local Bandit® dealer. The striped tape can be ordered by the foot under part number 900-9901-69.

REFLECTIVE STRIPED TAPE ON FEED CONTROL HANDLE

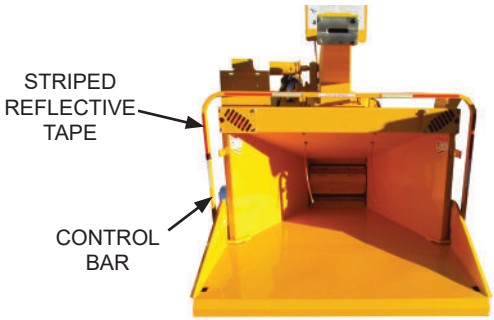

WARNING

WARNING DECALS

There are warning decals prominently displayed on the chipper to provide a constant reminder as to how the machine should be fed, operated, and maintained. It is the owners and operators responsibility to keep all decals, especially safety related decals, clean and readable. Every person involved in the operation or service of the chipper must be familiar, understand, and follow instructions on the decals. Decals are available in a variety of languages via Bandit® dealers or factory.

Correct Installation and Care of Decals

1. You should use soap and water to keep your decals clean. Never use mineral spirits or any other abrasive cleaners.
2. Immediately replace any missing or damaged decals. The location the decal is going to be applied to must be clean and dry, and at least 40°F (5°C) before applying decal.
3. When the need arises to replace a machine component with a decal attached, be sure and replace the decal.
4. Replacement decals are available, and can be purchased from the manufacturer or your Bandit Dealer.
5. Peel back about half of the backer paper on the decal. Position it on the flat, dry, clean surface so it is smooth and secure. Peel off the remainder of the backer paper as you continue to stick the decal on the surface.
6. Rub decal from the center outward to remove air bubbles and to secure contact.
7. Combination English / Spanish decals are typically standard. Other foreign language decals are available and may be purchased. Mail translated decals required to Bandit Industries, Inc.

WARNING

OPERATOR MANUALS

OPERATOR MANUALS

Chipper operator manuals are available for all of our equipment and when machines leave the factory, they are shipped with the manuals. There is extensive safety, service, and operational information in the manuals. An operator must never be allowed to use a chipper unless he/she is completely trained, has read and understands the manual and decals, and will follow the instructions provided. The instructions are for the safety of the operator, machine, bystanders, and nearby buildings. You can obtain manuals through your Bandit® dealers.

Training is essential! It is extremely important for everyone who operates a wood chipper to be trained. Operating instructions for the chipper are included in Bandit manuals, decals, and training videos with each chipper sold. We also highly recommend that you use the NAA chipper safety video. A copy of the video can be purchased by contacting NAA at the following address:

Tree Care Industry Association
3 Perimeter Road, Unit 1
Manchester, NH 03103
phone: 603-314-5380
800-733-2622
fax: 603-314-5386
website: www.tcia.org

Safety training and enforcement of safety operating procedures is an important process. No device will prevent accidents when equipment is operated in an improper manner. Operators need a frequent reminder as to the proper, safe operation of any piece of equipment, especially a chipper that is designed to quickly break down material much tougher than human flesh.

Please meet with your employees and have them read this Safety Booklet. Ask them what they think about the dangers we have discussed. Ask them if they have been guilty of some of the unsafe practices addressed in this bulletin. Lecture, preach, train, discuss, and enforce safety procedures constantly!!

Maintenance of a chipper also includes maintenance of safety devices. If you lose or destroy the wooden push paddle, get another one.

Chipper safety has to be a constant and continuing effort by all involved while operating and maintaining chippers.

Bandit Industries, Inc.
6750 Millbrook Rd.
Remus, MI 49340
USA

phone: (800) 952-0178 in USA
phone: (989) 561-2270 or 561-2272
fax: (989) 561-2273 ~ Sales Dept.
fax: (989) 561-2962 ~ Parts/Service Dept.
website: www.banditchippers.com

Copyright April 2017

WARRANTY VALIDATION FORM (HAND FED CHIPPER)

Customer Data Department
6750 Millbrook Road
Remus, MI, USA 49340
Phone: (800) 952-0178 in USA
Phone: (989) 561-2270
Fax: (989) 561-2273
Website: www.banditchippers.com

IMPORTANT - WARRANTY WILL BE DEEMED NULL AND VOID IF THIS FORM IS NOT FILLED OUT COMPLETELY AND ACCURATELY AND RETURNED TO THE CUSTOMER DATA DEPARTMENT WITHIN 10 DAYS OF EQUIPMENT DELIVERY

PURCHASER / OWNER INFORMATION:

Company Name _____ Contact Name _____

Mailing/Street Address _____ City _____

State _____ Zip Code _____ Country _____ Telephone Number (__) _____

E-mail _____ Machine Model No. _____ Date Put Into Service _____

Machine Serial No. _____ Machine Work Order No. _____ Machine Hours _____

Engine Make _____ Engine Serial No. _____ Machine Color _____

DEALER / SELLER INFORMATION:

Dealer/Seller Name _____ Contact Name _____

Mailing/Street Address _____ City _____

State _____ Zip Code _____ Country _____ Telephone Number (__) _____

1. _____ The customer has received instruction and fully understands all operational, safety and maintenance requirements of the equipment.

2. _____ The customer has received instruction and fully understands that everyone within 100 feet of the machine must wear proper personal safety equipment including hard hat, face shield, safety glass, gloves, ear protection and/or other items per OSHA and ANSI requirements.

3. _____ The customer has received instruction and fully understands the equipment maintenance schedules and procedures. The customer understands that it is their responsibility to perform scheduled maintenance that includes periodic relief valve adjustments, retightening all fasteners as needed, periodic cleaning of flow divider, clutch and belt adjustments, and other items.

4. _____ The customer has received instruction and fully understands not to reach into the infeed hopper with hands or feet.

5. _____ The customer has received instruction and fully understands that the operators must always be located within easy reach of all feed control and shut down devices.

6. _____ The customer has received instruction and fully understands that the wooden push paddle must be used to push small debris into the chipper and the operator is not to reach into or kick debris into the infeed hopper area of the machine.

7. _____ The customer has received instruction and fully understands the purpose and how to operate the last chance device, and if used the machine has been operated in an unsafe manner. The customer understands to never attempt to override any safety devices or guards.

8. _____ The customer has received instruction and fully understands that before performing any maintenance on the machine the ignition key must be removed, the cables must be completely disconnected from the battery, the disc/drum must have come to a complete stop, and the disc/drum lock must be installed. The customer understands they must allow the necessary time for the disc/drum to come to a complete stop before opening the disc/drum housing or starting any maintenance or service procedures. The customer has received instruction and fully understands the purpose of the beltshield inspection hole and that they are never to attempt any maintenance or service procedures until visually confirming the belts have come to a complete stop.

9. _____ The customer has received instruction and fully understands that the machine is not to be operated without the factory approved hood pin assembly in place and padlocked, the machine is not to be operated with any type of make shift hood pin, and the machine is not to be operated under any circumstances with the chipper hood open or unsecured.

10. _____ The customer has reviewed and fully understands limited warranty, and all written and visual instructions.

11. _____ The customer has received instruction and fully understands that warranty will not apply if the machine is operated with replacement parts or equipment not manufactured or recommended by Bandit Industries, Inc.

12. _____ The customer has received, been advised, and understands the manuals, and the Safety/Service video supplied with the chipper. A video is supplied for equipment models as available.

13. _____ All Danger, Warning and Operational decals are properly displayed on equipment and fully understood by customer.

14. _____ The customer has been instructed, understands, and agrees that all potential operators must: See the supplied video, be instructed on all the Danger, Warning and Operational decals, read the manual and follow the procedures.

15. _____ The customer has been advised of all safety options.

I have inspected this equipment and find it in correct working condition. To the best of my knowledge, the customer and his/her personnel are aware of, and agree to the above procedures.

Signed: _____ **Date:** _____

(Dealer Representative)

The equipment has been thoroughly checked by the above named dealer representative, and I am satisfied with his/her instructions. I have also read, understand, and agree to reverse side of page.

Signed: _____ **Date:** _____

(Customer)

Copyright 2/17 FORM #WV-122

Copyright 2-17 FORM #Q-111

TO BE RETURNED AFTER THIRTY (30) DAYS OF OPERATION

DATE PURCHASE: _____

MODEL: _____

SERIAL NUMBER: _____

DEALER NAME: _____

_____

Please return to: Customer Data Department
6750 Millbrook Road
Remus, MI 49340

Phone: (800) 952-0178 in USA
Phone: (989) 561-2270
Fax: (989) 561-2273
Website: www.banditchippers.com

EQUIPMENT QUALITY REPORT

All of the employees that build your equipment strive to manufacturer the **very best quality** product on the market. We would appreciate your efforts in letting us know how we are doing.

We would like you to operate your machine for thirty (30) days and then fill out this questionnaire and mail it to us. This will help us to keep producing a good product and improving our products through your recommendations.

1. Did your machine perform to your expectations? _____
2. Was the machine delivered on schedule? _____
3. Was the paint color and finish to your satisfaction? _____
4. Was machine equipment as ordered? _____
5. Did all welds appear to be high quality? _____
6. Was the overall machine to your liking? _____
7. What problems have you experienced? _____
8. Have any components regularly loosened that caused problems? _____
9. Does the hydraulic system seem to have adequate power for feeding wood into the machine? _____
10. Is the machine manufactured to accommodate service in an adequate manner? If not, please explain:
    _____
11. General comments and/or suggestions: _____
    _____
    _____
12. Would you like to be contacted concerning more of our equipment? _____

YOUR COMPANY: _____

NAME: _____

ADDRESS: _____

CITY: _____

STATE & ZIP: _____

PHONE: (____) _____

E-MAIL: _____

TABLE OF CONTENTS

PAGE
INTRODUCTION & WARRANTY 2
SERIAL NUMBER LOCATIONS 6
SAFETY PROCEDURES 7
EQUIPMENT SPECIFICATIONS 16
DECALS 17
AUTOFEED OPTIONS 25
CONTROLS 29
TRANSPORTATION PROCEDURES 41
MAINTENANCE 43
HYDRAULICS 78
ELECTRICAL 94
REPLACEMENT PARTS 95
- INFEED HOPPER COMPONENTS 96
- CHIPPER COMPONENTS 102
- CHIPPER KNIFE & HARDWARE 106
- ANVIL HARDWARE 107
- DISCHARGE COMPONENTS 108
- HYDRAULIC COMPONENTS 112
- FRAME & ACCESSORY COMPONENTS 122
- FUEL & HYDRAULIC TANK COMPONENTS 126
- OPTIONAL COMPONENTS 128

SERVICE RECORD 140
BANDIT CONTROLS 143

NOTICE

ANY PART, PORTION, DESIGN, NUMBER, SPECIFICATION, AND/OR DIMENSION IN THIS MANUAL IS SUBJECT TO CHANGE WITHOUT NOTICE BY THE MANUFACTURER.

INTRODUCTION

The purpose of this manual is to provide the user with specifications and procedures for the operation, maintenance and repair of this BANDIT product. As with any piece of equipment, safety should always be a constant thought while the machine is being operated, serviced or stored. In order to highlight this consideration, the material which addresses safety is proceeded by the following signal words:

Signal Word	Likelihood of Occurrence	Degree of Potential Injury or Damage
⚠ DANGER	Will occur if warning is ignored	Severe
⚠ WARNING	Can occur if warning is ignored	Severe
⚠ CAUTION	Will or can occur if warning is ignored	Minor to Severe
NOTICE	Important, but not hazard related	Minor

The equipment is designed and manufactured in accordance with the latest product industry standards. This alone does not prevent injury. It is the operator's responsibility to use good judgement and follow the warnings and instructions as indicated in this manual, on the machine and follow all safety standards per ANSI and OSHA instructions.

⚠ WARNING

Improper use of the product can result in severe personal injury. Personnel using the equipment must be qualified, trained and familiar with the operating procedures as defined in this manual, prior to operating the product.

⚠ WARNING

It is the responsibility of the owner or employer to ensure that the operator is trained and practices safe operation while using and servicing the machine. It is also the owner's responsibility to provide and follow a regularly scheduled preventative maintenance and repair program on the product, using only factory approved replacement parts. Any unapproved repairs or modifications may not only damage the machine and its performance, but could result in severe personal injury. Unapproved repairs or modifications will void warranty and eliminate manufacturer of any liability claims. Consult the equipment manufacturer with any questions.

Each machine is shipped with a manual, a customer's check sheet on the product, and any available parts & service manuals on component parts not produced by this manufacturer. Additional copies of these manuals and check sheets can be purchased from the manufacturer, or through the dealer. Engine parts, service and maintenance manuals MUST be purchased through the engine manufacturer or their dealer.

NOTICE

The producer of this Bandit product reserves the right to make any modifications or revisions to the design or specifications of its machine without advance notice. The producer also reserves the right to change machine and part prices as needed without advance notice.

TYPICAL CHIPPER SERIAL NUMBER AND/OR WORK ORDER NUMBER LOCATIONS

1. S/N on side of frame
2. W/O # on top of tongue

NOTICE

The engine information is located on the engine block. The clutch information is located on the clutch plate (if equipped).

SAFETY PROCEDURES

⚠DANGER

The words ⚠Danger, ⚠Warning, ⚠Caution, and Notice are used on the safety decals and throughout this manual, to make you aware of the safety procedures. These procedures are very important, read and obey them.

YOUR SAFETY IS VERY IMPORTANT TO US!

This machine is equipped with safety decals, guards and designs for your protection.

Don't ever take the machine for granted, always be cautious and careful when operating your equipment.

Read and follow all the instructions in your manual thoroughly. Your safety is dependent on your knowledge of how to operate and maintain this machine. You may obtain additional copies of this manual from your Bandit Dealer.

Before operating machine, you must have all potential operators; read and understand manuals and decals, watch the video and follow the recommendations.

Regardless of how hard a manufacturer tries to produce a safe machine, accidents still happen. Normally accidents are caused by people making mistakes. They do not read the manual, they ignore warning decals or do not use lockouts provided for their safety. This normally happens after the person has become accustomed to the machinery. In the initial start up and operation of the machinery, they are cautious, they are very careful because they do not understand the machine.

This equipment is intended for use by adults who have been properly trained and are physically capable of operating the machine safely. Never allow minors to operate this machine. Never operate any machine while under the influence of drugs or alcohol. Never operate equipment that is in need of repair or adjustment. Keep children, bystanders and animals clear of working area.

There must be at least two qualified and trained operators at the work site. They must be positioned in safe working locations, following safety procedures and instructions, and aware of each others whereabouts. There must, also, be at least two people on site during maintenance and service procedures in case an accident should occur.

⚠DANGER

Before starting the machine, take a minute to check a few things. The machine should be in an area restricted from people passing by. This area around the machine must be free of all objects that can obstruct your movement when working with the machine. The machine should be checked for loose tools or foreign objects, especially in the infeed hopper area. All tools not in use should be secured in a tool box.

⚠WARNING

Operators **must** at all times be located within easy reach of all feed control and shut-off devices when the unit is running. They must be attentive and prepared to activate the devices.

⚠DANGER

Torn or loose clothing is more likely to get caught in moving machinery parts or tree branches. Keep such items as long hair, shirt sleeves, and shirt tails properly contained. Avoid wearing necklaces, rings, watches, and especially neckties while operating this machinery. Make sure the machine is in excellent condition, and all the guards are in place, tight and secure.

Wear all personal protection equipment and follow all safety standards per ANSI and OSHA instructions. Examples of equipment: hard hat, face shield, safety glasses, gloves, ear protection, etc. Do not wear gauntlet or secured fit gloves. Always keep a fully charged fire extinguisher with the machine while operating or servicing the machine.

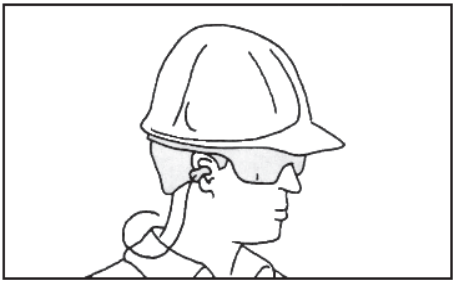

NOTICE

Striped reflective tape has been installed on the feed control handle of the machine. This tape is reflective, self adhesive and has contrasting colors. The tape helps make the feed control handle stand out more and it makes the rear of the machine more visible to a vehicle behind the machine while transporting. Striped tape can be obtained through your local Bandit Dealer.

SAFETY PROCEDURES

⚠DANGER

NEVER sit, stand, lay, climb or ride anywhere on this machine while it is running, operating, or in transit. You will be injured.

⚠DANGER

Pay attention to the direction of the discharge chute before chipping. Never stand in front of the chipper discharge chute. Never direct the chute towards anyone or anything that could cause an accident or problems. Always stop chipping and warn anyone that comes near the discharge area. Failure to do this could result in severe injury. Wood chips flying out of the discharge chute can be very dangerous!

⚠WARNING

It is very important after you have operated a new machine for approximately an hour to shut down the machine and recheck all nuts and bolts. It is normal for nuts and bolts to loosen once on a new piece of machinery. If you tighten them now, there is a good possibility they won't loosen again. Certain nuts and bolts should be checked periodically such as anvil and knife nuts and bolts, etc. for torque and fit.

Most of the nuts used on the machine are self locking. After a nut or bolt has been removed five times, it should be replaced to ensure proper tightness. This is especially critical on the chipper knife nuts and bolts!

After the engine is started, let the chipper disc/drum turn at the lowest RPM's possible. Listen for any type of noise that is foreign. Any steel on steel noise is foreign. If you hear a noise, stop the engine, find the problem and fix it.

⚠WARNING

It is very important after you have operated a new machine for approximately an hour to shut down the machine and recheck all hydraulic fittings. Relieve all pressure and retighten as needed.

DO NOT GO NEAR HYDRAULIC LEAKS! High pressure oil easily punctures skin causing serious injury, gangrene, or death. Avoid burns from fluid. Hot fluid under pressure can cause severe burns. DO NOT use fingers or skin to check for leaks. Lower load or relieve hydraulic pressure before loosening fittings. Relieve all pressure in the system before disconnecting the lines, hoses, or performing other work. Use a piece of cardboard to find leaks. Never use your bare hands. Allow system to cool down to ambient temperature before opening any coolant or hydraulic oil system.

In cold weather situations let your hydraulic system idle for approximately 15 minutes to allow the system to warm up to operating temperature.

⚠DANGER

Never reach into the infeed hopper area of the machine, there is never any reason to. The feedwheel(s) are designed to pull trees and brush of any length into the machine. Pulling a hand, arm, foot or entire body through the machine is much easier than pulling a tree. Do not think you will be able to pull yourself free of the feedwheel(s), they will not let go. There is absolutely no reason to work inside of the infeed hopper. If the feedwheel(s) become tangled or clogged: disengage clutch, turn off engine, wait for the chipper disc/drum to come to a complete stop, install the disc/drum lock pin, disconnect battery, and make sure the ignition key is in your possession before cleaning the feedwheel(s) out. If there are short pieces, or leaves and twigs, just leave them until feeding longer pieces. While the long pieces are feeding, simply toss the short pieces on top of them. The longer pieces will take them on into the machine.

A wooden push paddle has been provided to assist in feeding smaller material. It is the owner's and operator's responsibility to use and keep a wooden push paddle with the machine and to also secure it when transporting the machine. DO NOT use any body parts or any steel devices inside the infeed hopper area.

If there is larger diameter wood, try to feed it with smaller diameter wood. Start a small diameter limb which will partially open the feedwheel(s). Once the feedwheel(s) are partially open it is much easier to insert the larger diameter wood.

When feeding larger diameter wood, listen for the engine to possibly lug down. If it starts lugging down stop the feedwheel(s) by pushing the hydraulic control bar to off, and let the engine recover to full speed. If the machine is equipped with Autofeed and it is functioning properly, the feed system will automatically stop to let the engine recover. This will help stop the machine from plugging the discharge chute.

⚠DANGER

The patented "Last Chance Stop" is a means of stopping/reversing the feedwheels if a negligent operator does not follow the safety rules and finds themselves in trouble! DO NOT RELY ON THE "LAST CHANCE STOP" TO DISOBEY THE OPERATOR RULES! The "Last Chance Stop" does nothing for the foolish operator who kicks into the infeed hopper area.

With engine shut off and all moving parts stopped, DAILY pull last chance cables to ensure they freely disengage and reverse feed wheel hydraulic valve.

⚠WARNING

DO NOT operate this machine unless all hydraulic control devises operate properly. They must function, shift and position smoothly and accurately at all times. Faulty controls can cause personal injury!

SAFETY PROCEDURES

⚠DANGER

DO NOT operate this machine indoors! Exhaust fumes can be fatal. Never refuel while the machine is running. Never refuel in the shop or building. Always refuel in a well ventilated area, away from sparks or open flames, DO NOT SMOKE. Extinguish all smoking materials. Wipe up all spilled fuel before restarting the engine. Do not fill above 1/2" (12.7mm) from top of tank for diesel engines and 2" (50mm) from the top of the tank for gasoline engines.

To obtain the most from your machine, for the least amount of cost, it is a good practice to set up and follow a scheduled preventative maintenance program. It will eliminate many possible problems and down time.

⚠DANGER

Keep the machine in good condition. Be sure the machine is in good operating condition and that all safety devices, including guards and shields are installed and functioning properly. Visually inspect the machine daily before starting the machine. Refer to the "Daily Start Up & Maintenance". Make no modifications to your equipment unless specifically recommended or requested by Bandit Industries Inc.

⚠DANGER

Before attempting any type of maintenance disengage clutch, turn off engine, wait for the chipper disc/drum to come to a complete stop, install the disc/drum lock pin, disconnect battery, and make sure the ignition key is in your possession.

ALWAYS install the disc/drum lock pin to prevent inadvertent rotation. On disc chippers insert lock pin through lock pin tube on the belly band under hood rest. On drum chippers insert lock pin through lock pin tube on side of drum housing.

Simply slide the lock pin into the disc/drum lock tube. This is to ensure that the chipper disc/drum cannot be started while you are working inside the machine. If for some reason the chipper disc/drum would start to turn, it would simply hit the lock pin.

⚠WARNING

Never use jumper cables during freezing temperatures. Tow the machine inside and allow the battery time to warm up. If the machine must be started outside, inspect the battery acid for ice formation. Explosion will occur with a frozen battery. If the machine is going to be operated in excessively cold conditions, a larger cold cranking amp battery may be needed to ensure proper and prompt starting. Never use jumper cables in a confined or unventilated area. Battery acid fumes are explosive. Battery acid can cause severe burns. Never expose an open flame or spark near the battery. Keep all burning materials away from the battery. When servicing the battery, shield eyes and face, and do not smoke. Service in a well ventilated area.

⚠DANGER

The knives must be securely fastened and torqued in position. If one comes loose or breaks during operation, someone or something may get injured or damaged.

⚠DANGER

Chipper knives are sharp and can be dangerous. It is always necessary for your protection to be extra careful and wear proper hand protection when handling knives.

⚠WARNING

This chipper is designed to be "HAND FED" only! DO NOT feed wood with any type of knuckle boom loader, front end loader, or mechanical device. It will cause damage to the machine. If this happens, the machine WILL NOT be covered under warranty.

⚠DANGER

Avoid moving parts. Keep hands, feet, and clothing away from power driven parts. Keep all guards and shields in place and properly secured.

⚠DANGER

Never feed any materials that might contain wires, stones, nails, metal objects, or any foreign object which may damage the knives and become dangerous projectiles.

⚠DANGER

DO NOT feed vines or vine-like material! DO NOT pile vines or vine-like material in front of the infeed hopper which may cause you to trip or fall! DO NOT allow vines or limbs to become entangled with you or your clothing! ALWAYS cut vine-like material into 4 to 5 foot (1.2 to 1.5 meter) length's, away from the chipper area! ALWAYS stop the feed system before feeding the cut vine-like material into the infeed hopper! ALWAYS use a wooden pusher paddle when feeding the cut vines into the feedwheel(s)! ALWAYS be in position and prepared to activate the feed control handle!

⚠DANGER

DO NOT remove the hood pin until the chipper disc/drum has came to a complete stop. The chipper disc/drum will coast for several minutes after the engine is shut down. Always wait at least several minutes.

DO NOT operate this machine without the Hood Pin in place. Do not operate the machine with any type of makeshift hood pin or an improperly installed hood pin! The Hood Pin MUST be padlocked.

DO NOT operate the machine with the chipper hood open under any circumstances.

SAFETY PROCEDURES

⚠DANGER

Before opening or closing the feedwheel trap door: disengage clutch, turn off engine, wait for the disc/drum to come to a complete stop, install the disc/drum lock pin, disconnect battery, and make sure the ignition key is in your possession. In the event that dirty material is being run through the chipper the feedwheel trap door can be opened.

⚠WARNING

The machine was built with a chipper hood engine disable plug which disables the engine if it is not installed properly with the hood pin holding the chipper hood in the closed position. Correctly installed and maintained, the engine will not start or it will shut off if the chipper hood engine disable plug is disconnected. The chipper hood must NEVER be opened, or pushed closed if the chipper disc/drum is turning.

⚠DANGER

DO NOT slam the chipper hood to the open position. This will cause damage to the hinge. If your hinge has become damaged by slamming the hood to the open position, Replace The Hinge Immediately! If the hinge has become damaged it will cause misalignment of the hood, the chipper disc/drum may then hit the hood and cause a serious accident! Lubricate the hood hinge daily.

⚠DANGER

Never turn the chipper disc/drum by hand, always carefully use a pry bar or wood bar. This will help prevent the person turning the disc/drum from being injured should the disc/drum break loose.

A sight hole in the chipper beltshield has been provided. If chipper belts are moving do not open chipper hood. Do not stick fingers in sight hole.

⚠DANGER

Do not work inside the mouth of the chipper or around the feedwheel(s), until you have installed the yoke lock pin completely and securely to help keep the top feedwheel in the raised position. Remove the yoke springs if equipped, block and chain top wheel up before doing any work inside throat. Always block or stabilize the infeed hopper when working inside the infeed hopper.

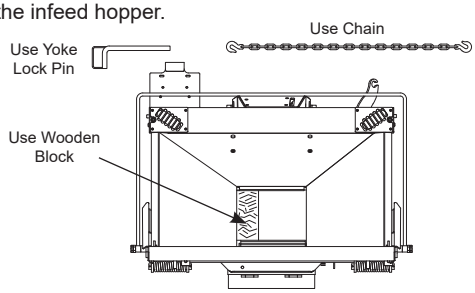

⚠DANGER

If the chipper is properly maintained and operated correctly, the chipper should not plug. In the unlikely event that the chipper becomes plugged, do not attempt to clean out the discharge or chipper housing in the field. Take the machine to a local dealer or professional shop. If the machine is a rental, take it back to the rental company.

⚠DANGER

If the discharge or hood needs to be removed, always use some sort of mechanical device like an overhead hoist, loader, lift truck, etc. that is rated for lifting that component. Follow all OSHA instructions for lifting.

NOTICE

Do not attempt to start the engine or engage the engine PTO (power-take-off) system on this machine if the chipper disc/drum is jammed or frozen in place. If you do, you will damage or ruin the drive belts and/or the PTO which will not be covered under warranty and will cost you down time and money.

⚠DANGER

Do not work on the machine if the engine is running with the clutch disengaged. A clutch can self engage if either the pilot or throw-out bearing happens to seize to the main output shaft.

There are various types of clutches (PTO's) available for this type of equipment. Make sure to study the original clutch manufacturer's manual that is provided with the machine and follow its instructions for operation, service, and adjustments. Some styles require clutch engagement to be maintained so that it takes a lot of force, others will require very little force, and some are push button, electric, manual lever, or hydraulic activation. Each different style clutch (PTO) is a very expensive item that will fail if not correctly maintained and adjusted. It will be quite costly if a few minutes are not taken daily, weekly, and monthly to keep the clutch serviced as required.

The operator must take care in the engagement and disengagement of the clutch, engine RPM must always be at idle speed. When the engine has sufficiently warmed up, bump the clutch handle against engagement to start the chipper disc/drum turning. This will have to be repeated until the chipper disc/drum is turning at proper ratio with engine RPM. Then push the handle all the way in gear until it locks into position securely. After engagement raise engine RPM to full throttle. Engaging and disengaging the clutch at high engine RPM will quickly and excessively wear out clutch plates as well as bearings. Refer to clutch manufacturer's manual for proper service and operation.

SAFETY PROCEDURES

⚠DANGER PROPER MAINTENANCE AND USE OF BOTTOM CLEAN-OUT DOOR

There is never any reason to open the bottom clean-out door while the chipper is in operation. Opening and closing the bottom clean-out door should always be done after the chipper has been turned off and the feedwheels have stopped turning. Disengage clutch, turn off engine, wait for the disc/drum to come to a complete stop, install the disc/drum lock pin, disconnect battery, and make sure the ignition key is in your possession.

Never reach or kick underneath the chipper in the area of the feedwheel clean-out door. If your hand or foot comes into contact with the bottom feedwheel, serious injury could occur. Always turn off the chipper and make sure the feedwheels have stopped turning before performing any maintenance in the bottom clean-out door.

There is never any need to remove debris that collects underneath the chipper while the chipper is in operation. Make sure the chipper engine is off and the feedwheels have stopped turning before cleaning any debris from underneath the chipper, or simply move the chipper to assist with cleaning debris from underneath it.

The bottom clean-out door is located directly underneath the feedwheels. It is hinged to the chipper and can be secured in a closed position with spring-loaded pins. When the door is in the closed position, access is restricted to the bottom feedwheel from underneath the chipper. When in the closed position, the door keeps debris from piling on the ground. The door can be opened to perform maintenance to the bottom feedwheel or to assist with unclogging, should vine-like material become wrapped around the bottom feedwheel.

During chipping operations, the bottom clean-out door should be closed. It is intended to be open ONLY when materials that need to be placed into the chipper contain muddy gravel or rocks. If possible you should try to remove all gravel, mud, and rocks from the brush before feeding it into the chipper. By opening the bottom clean-out door, mud, and rocks are allowed to drop down onto the surface below, preventing damage to the knives and discharge chute which can cause damage to the chipper, as well as serious risk of injury. Stray rocks and gravel may damage or break the knives. Rocks and broken knives will be propelled out through the discharge chute, which could cause injury to anyone in the vicinity.

Never transport the chipper with the bottom clean-out door in the open position because it subjects the door to physical abuse and damage during transportation. This can damage the hinge and prevent the door from being properly closed during operation.

Once the bottom clean-out door has been opened to perform maintenance or prevent debris from damaging the chipper, the door should always be closed before continuing operations.

⚠WARNING

The ANSI required control bar is designed to reverse the feedwheels when pushed. Check the direction and proper operation of the control bar before operating the chipper.

CORRECT OPERATION OF FEED CONTROL BAR

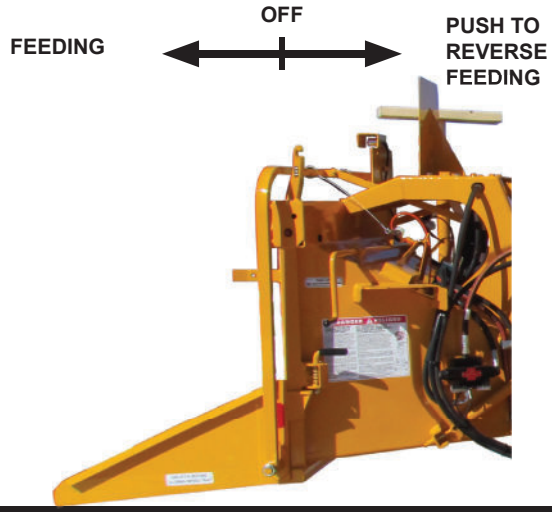

SAFETY PROCEDURES

NOTICE

Tongue jacks or optional rear stabilizers, whether hydraulic or manually operated are designed to stabilize the machine. The tongue jack or rear stabilizers are not designed to hold the machine off the ground at any time. Install secure blocking and / or chocking as needed. Before transporting the machine, ensure the tongue jack and rear stabilizers are fully retracted and secured in the transport position.

⚠WARNING

Always stand to the side of the infeed hopper when inserting material. This will allow you to turn away from the wood, and walk away, without passing through the material. Machines should be fed from curbside (right side) whenever possible. Anytime an operator is near the infeed hopper, they must be within easy reach of the feed control devices.

To increase production, don't waste time watching the material being fed. Once the limbs have started into the machine, you can walk away and get more material.

Keep the feedwheel tension springs adjusted only tight enough to keep the feedwheel teeth from slipping on the material. DO NOT OVERTIGHTEN! This will overwork the hydraulic system, and make it difficult to feed larger material.

Always start the larger end (base end) of the log, tree, or branch into the feedwheel(s) first.

Keep the engine R.P.M.'s at full throttle whether you are chipping brush or round wood. Lower R.P.M.'s will cause weak throwing power, and can cause plugging in the discharge.

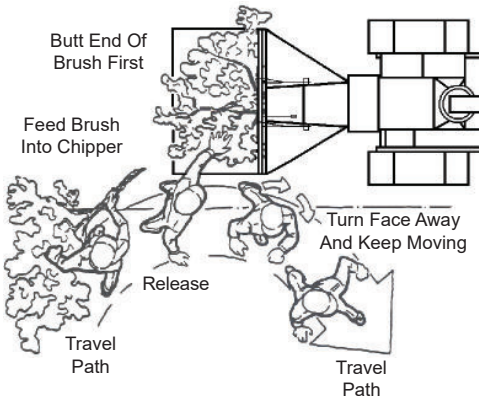

⚠DANGER

Always block the tires and the machine tongue whenever the machine is unhooked for operation. DO NOT rely on the tongue jack for operational stabilization.

⚠WARNING

Check laws and regulations. Know and obey all federal, state, and local laws and regulations that apply to your work situation and the transportation of a machine this size.

⚠WARNING

Before you begin to transport your trailerized machine follow all of the transportation procedures on page 41 - 42. Make sure that the tongue has been raised to the proper height and attach the machine securely to the towing vehicle. Once secured to vehicle, locate tongue jack and secure it in the transport position. Always hook safety chains to vehicle by crossing them under the tongue allowing enough slack to avoid binding or dragging the ground when making turns. Check brakes and highway lights make sure that they are all operating properly. Check that the plug terminal functions match the towing vehicle for proper operation. Make sure that the discharge chute is in the transport position pointed over the tongue of machine and the transport bolt is securely in its place. Be sure to check tire pressure before you begin to transport the machine. Close the folding tray, if equipped for the infeed hopper and make sure spring latches are locked into place. If machine is equipped with a vise, make sure to secure in place and clamp jaws closed. Close and secure any of the following, if equipped: tool box, battery box, engine cowl doors and side panels, radiator debris screens, inspection doors, cabinet doors, housing covers, tank caps and covers, etc.

⚠WARNING

Improperly adjusted or maintained rope/line shear could result in serious injury or death and damage to the chipper.

⚠WARNING

Before performing maintenance on the machine remove all debris, oil, grease, water, snow, ice, etc. from all machine surfaces.

⚠DANGER

Keep hands clear of all pinch points.

⚠DANGER

Do not touch hot machine surfaces. The machine surfaces may be hot due to the machine operating recently or the machine setting in the sunlight.

SAFETY PROCEDURES

⚠WARNING

CLEAN MACHINE OF ALL DEBRIS! DO NOT leave this machine unattended until all potential fire debris is removed, no fire or smoldering exists, and hot spots are cold. The engine creates many hot spots including: exhaust manifold, exhaust, turbo (if equipped), etc. Remove all flammable debris such as wood, chips, leaves, oils, fuels, etc. from engine exhaust, engine turbo (if equipped), beside, around, and under engine, around and under tanks, inside belt shields and guards, inside battery and tool boxes, inside cabinets (if equipped), and anywhere materials collect. ALWAYS keep several type A:B:C fire extinguishers operational and on the job at all times.

⚠WARNING

Operation of this equipment may create sparks that can start fires around dry vegetation. A spark arrester may be required. The operator should contact local fire agencies for laws or regulations relating to fire prevention requirements.

NOTICE

The Bandit has only been run for a short time to test proper hydraulic pressures, possible leaks, etc. The fuel tank will be empty. Fuel is provided through a small auxiliary tank for testing. This immensely helps maintain safety in our manufacturing facility and while shipping.

NOTICE

Expensive damage to the Bandit will occur if proper preparation is not taken before welding on the machine. Be sure to disconnect both battery cables and the engine ECM (engine control module) before welding. Follow the specific Engine MFG. instructions for proper welding and grounding procedures, before attempting to weld on the machine. If welding on the machine, do not ground the welder through the machine bearings, ground near work to be performed.

⚠WARNING

EXPLOSION HAZARD: Ultra low sulfur diesel (ULSD) poses a greater static ignition hazard than earlier diesel formulations with higher sulfur content. Avoid death or serious injury from fire or explosion; consult with your fuel or fuel system supplier to ensure the delivery system is in compliance with fueling standards for proper grounding and bonding practices.

⚠DANGER

Brush being fed into the chipper infeed hopper can snag an extended winch line. The knives on the spinning disc/drum can grab and pull in the winch line at a high rate of speed resulting in serious injury or death to workers nearby.

⚠DANGER

The winch line is under tension at times and could suddenly release, snapping back into the operator causing serious injury or death.

⚠DANGER

Never operate the hydraulic winch with the wood chipper detached from the towing vehicle. The load may move the wood chipper or pull the tongue off the support blocking.

⚠DANGER

Climbers' ropes and other lines present at the work site can become entangled in brush being fed into the chipper. The knives on the spinning disc/drum can grab and pull in ropes at a high rate of speed resulting in serious injury or death to workers nearby.

⚠DANGER

Most winch lines contain a metal hook at the end. If the metal hook enters the infeed hopper, it could be ejected out of the discharge chute at a high rate of speed causing serious injury or death.

⚠DANGER

There must be outbound tension on the winch line whenever the winch line is being powered out. Using the hydraulic control to power out the winch line rather than free spool the line out could result in the line becoming tangled around the spool and wind inward when the hydraulic lever is in the unwind position. If a worker is holding the winch line when this happens a potential nip point is created between the winch line housing and hook and also the winch line and material.

⚠DANGER

If used, the block and tackle, rigging, and accessories must be sized appropriately, properly maintained, and used by a trained professional. Failure could result in serious injury or death.

⚠DANGER

Never reach into the winch or winch roller area.

⚠WARNING

The winch line hook must be sized properly so that it will not fit through the winch fairlead or rollers.

SAFETY PROCEDURES FOR OPERATING OPTIONAL HYDRAULIC WINCH

This Notice describes important safety information for all Brush Bandit wood chipper owners and operators. The information below is meant to provide you with notice of a potentially dangerous situation that can and should be avoided.

Everyone working around wood chippers should be well-trained to understand that lines commonly used at the job site can inadvertently be pulled into the chipper while feeding brush. This includes the lines on the optional hydraulic winch attached to the top of the infeed hopper. When the winch line is extended, the opportunity exists for brush or workers to become entangled in the winch line. Never place yourself between the brush and winch line. Feeding brush with the winch line extended or when other ropes are in the area of the infeed hopper can result in the line becoming entangled in the brush being fed into the chipper. If this happens, the winch line or rope will be pulled into the chipper. If any rope or line becomes caught in the spinning knives, it could be pulled into the chipper at a high rate of speed and when a worker is in its path, there is little or no opportunity to avoid it. The result is serious injury or death.

Chipper owners and operators should not feed brush into the chipper while the winch line is extended. The intended use of the winch is to assist the operator in pulling large tree limbs to the wood chipper feedwheels without having to lift and carry. Never pull out the winch line while brush or limbs are feeding into the chipper. When you are not using the winch, ensure that it is retracted and stowed so that it cannot become tangled in brush and pulled into the chipper.

Make sure there is outbound tension on the winch line whenever the winch line is being powered out. Using the hydraulic control to power out the winch line rather than free spool the line out could result in the line becoming tangled around the spool and wind inward when the hydraulic lever is in the unwind position. If a worker is holding the winch line when this happens a potential nip point is created between the cable housing and hook and also the winch line and material.

⚠ DANGER

Brush being fed into the chipper infeed hopper can snag an extended winch line. The knives on the spinning disc/drum can grab and pull in the winch line at a high rate of speed resulting in serious injury or death to workers nearby.

⚠ DANGER

Climbers' ropes and other lines present at the work site can become entangled in brush being fed into the chipper. The knives on the spinning disc/drum can grab and pull in ropes at a high rate of speed resulting in serious injury or death to workers nearby.

⚠ DANGER

Never operate the hydraulic winch with the wood chipper detached from the towing vehicle. The load may move the wood chipper or pull the tongue off the support blocking.

⚠ DANGER

Never reach into the winch or winch roller area.

⚠ DANGER

Most winch lines contain a metal hook at the end. If the metal hook enters the infeed hopper, it could be ejected out of the discharge chute at a high rate of speed causing serious injury or death.

⚠ DANGER

Make sure there is outbound tension on the winch line whenever the winch line is being powered out. Using the hydraulic control to power out the winch line rather than free spool the line out could result in the line becoming tangled around the spool and wind inward when the hydraulic lever is in the unwind position. If a worker is holding the winch line when this happens a potential nip point is created between the cable housing and hook and also the winch line and material.

⚠ DANGER

The winch line is under tension at times and could suddenly release, snapping back into the operator causing serious injury or death.

⚠ DANGER

Follow all winch operating procedures, if not followed severe injury or death can result.

- The intended use of the winch is to assist the operator with pulling large tree limbs to the wood chipper feedwheels without having to lift and carry.
- Pinch point hazards may develop during winching operations. The hydraulic controls are located on the side of the infeed hopper. Operating the winch is a one-man operation. Do not have one person operating the winch hydraulic control with another person operating or holding the winch line. The person holding the winch line could have his hand pinched when another person is operating the winch control.
- Winching large limbs to the wood chipper should be performed by one person.
- Stay clear when winching.
- Do not allow winch line or other ropes to be snagged and pulled into the chipper knives.
- Avoid becoming entangled in the winch line. Never place yourself between the brush and the winch line while using the winch line to pull large tree limbs toward the chipper.
- The metal hook at the end of the winch line entering the wood chipper could result in serious damage to the knives and other internal components causing the potential for injury to operators.
- When you are not using the winch, ensure that the winch line is retracted and stowed so that it cannot be pulled into the chipper.
- Never pull out the winch line while brush or limbs are feeding into the chipper.
- Never attach winch line to an installed choker if other limbs are feeding into the machine.
- Brush can snag winch line or climbers' ropes. Knives can grab and pull in line and anything attached to it at a high rate of speed.
- If you are in between the chipper and the winch line that is caught in the knives, the winch line will be pulled in at a very rapid speed and you will not have time to get out of its way. Death or serious injury may result.
- Do not overload the winch. The line can break or the choker can come off and strike a worker.
- Be aware of the hazards of winch line breakage. Ensure that everyone remains clear of the recoil area in the event of load or line breakage.
- Pull loads in a manner that avoids angles which could result in tipping or other unintended movement of the chipper and towing vehicle.

SAFETY PROCEDURES

IF MACHINE IS EQUIPPED WITH A SELF PROPELLED UNDERCARRIAGE

Machines equipped with undercarriage tracks are shipped with a manual from the track manufacturer. Refer to it for service, operation, and safety information.

⚠WARNING

Do not attempt to operate the machine on an ascending or descending slope of more than 25° or 46% or a side slope of more than 17° or 30%, it is Dangerous and could be Fatal. This is the maximum slope grade the machine can be operated on if the hydraulic system, self propelled undercarriage, and engine are running at maximum performance and good traction is sustained.

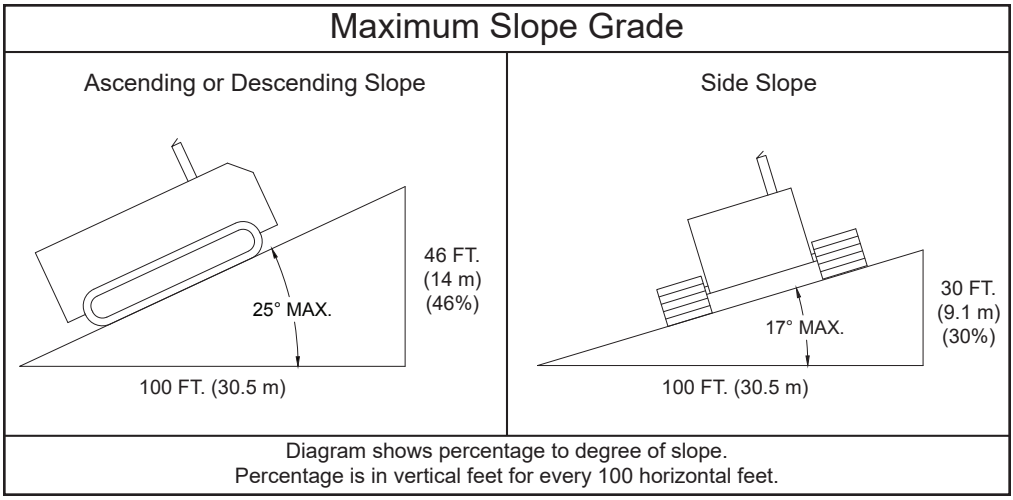

⚠WARNING

Any increase from the specified maximum operating angles may cause loss of lubrication function and damage the engine.

⚠DANGER

The machine should never be parked on a slope at any time. The machine can coast or creep causing equipment damage and/or personal injury.

⚠DANGER

Make sure everyone is clear of machine before moving the machine. Stay clear of undercarriage travel system when the machine is moving.

⚠DANGER

NEVER sit, stand, lay, climb or ride anywhere on this machine while it is running, operating, or in transit. You will be injured.

⚠DANGER

Use **EXTREME CAUTION** when traveling over non-level surface! This machine can tip over or tip backwards on non-level surface. You will cause engine damage, machine damage and possible personal injury!

⚠DANGER

DO NOT entangle feet or hands in undercarriage travel system.

EQUIPMENT SPECIFICATIONS

Approximate Dimensions & Weights

(Dimensions & weights will vary depending on optional equipment)

Model 15XP/1390		Model 15XPTRACK/1390TRACK	
Height:	104” (2.6 m)	**Height:**	115” (3.0 m)
Length:	214” (5.4 m)	**Length:**	177” (4.5 m)
Width:	78” (2.0 m)	**Width:**	90” (2.3 m)
Weight:	8000 lbs. (3630kg)	**Weight:**	11,000 lbs. (5670kg)
Fuel Tank Capacity:	30 gal. (113L)	**Fuel Tank Capacity:**	50 gal. (189L)
Hydraulic Tank Capacity:	12 gal. (45L)	**Hydraulic Tank Capacity:**	50 gal. (189L)

DECALS

WARNING

WEAR EYE & PERSONAL PROTECTION EQUIPMENT

Wear all personal protection equipment and follow all safety standards per ANSI and OSHA instructions.

DANGER

LOCKOUT ALL ENERGY SOURCES BEFORE SERVICING OR REMOVING GUARDS OR HOODS!

1. Shut off engine/motor. Key in possession.
2. Disengage pto/clutch.
3. Wait for cutter disc/drum to come to a **COMPLETE STOP** (takes at least several minutes).
4. Install disc/drum lock pin.
5. Loader arm (if equipped) securely on ground and hydraulic pressure released.

6. Unplug engine disable plug-in.
7. Remove padlock from hood pin.
8. Press down and hold hood spring lock pin (on disc chippers).
9. Retract hood pin.

DO NOT RESTART UNTIL ALL GUARDS AND HOODS ARE SECURELY AND PROPERLY INSTALLED.

DECAL LOCATIONS

Decal locations may vary, these are general locations.

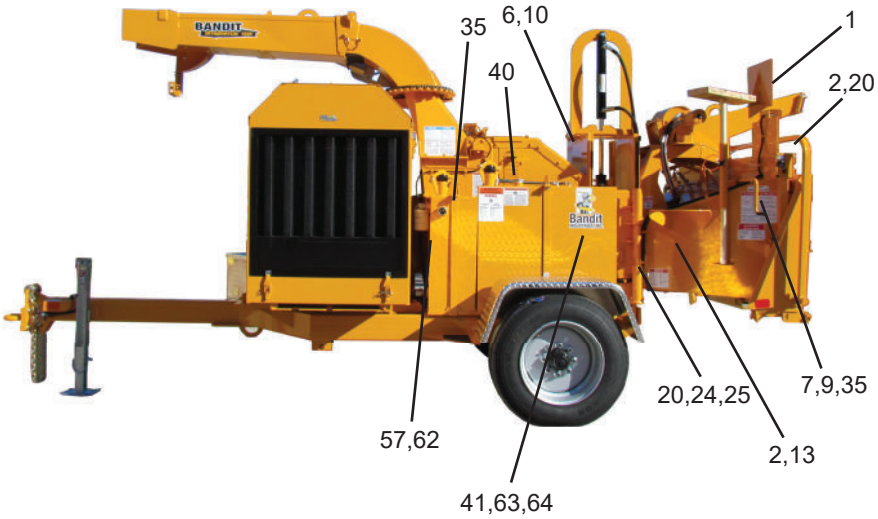

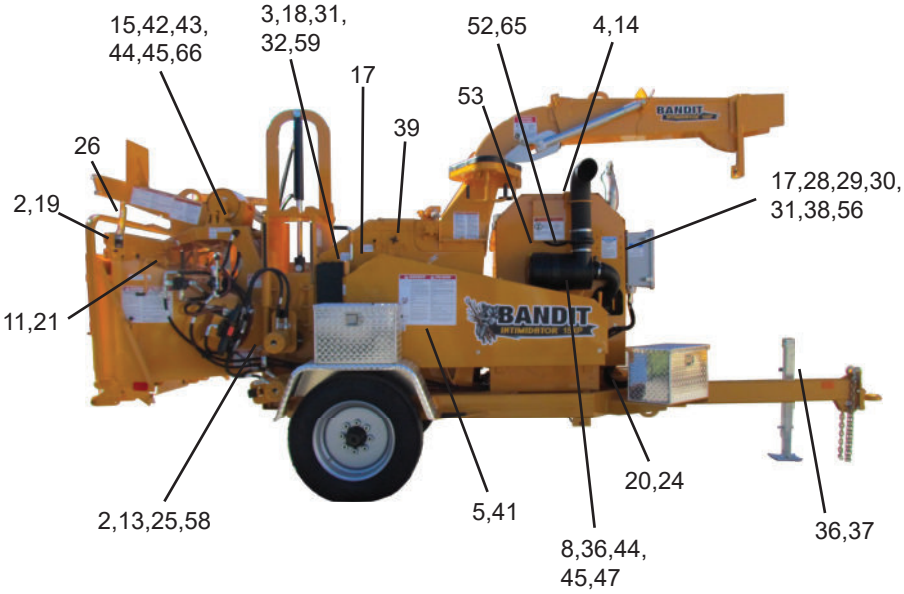

DECAL LOCATIONS

Modifications and/or additions of decals to this list will happen.
Consult chipper dealer or manufacturer for most current decal package.

LOCATION	NUMBER	DESCRIPTION
1.	SPD-01	Avoid Injury Or Death...
2.	SPD-02	Moving Parts...
3.	SPD-03	Lockout All Energy Sources...
4.	SPD-04	Flying Discharge Material...
5.	SPD-07	Last Chance Stop Cables...
6.	SPD-09	Do Not Work Under Top Feed...
7.	SPD-12	Do Not Feed Vine-Like...
8.	SPD-28	Do Not Insert Fingers
9.	SPD-30	Do Not Sit, Stand, Lay, Climb...
10.	SPD-33	Do Not Work Under...
11.	SPD-34	Brush Chippers Are Very Dangerous...
12.	SPD-52	Never Open Bottom Clean-Out Door...
13.	SPD-53	...Always Use Some Sort Of Mechanical Device...
14.	SPD-54	Winch Operation
15.	SPD-62	Stay Clear...Tongue Jack
16.	SPD-70	Keep Hands Clear...
17.	ID-67	Bandit Industries Inc...USA
18.	INST-02	Yoke Lock Hole
19.	INST-03	Yoke Lock Bar
20.	INST-04	Arrow
21.	INST-05	Yoke Lift Up / Down
22.	INST-07	Discharge Swivel Right / Left
23.	INST-08	Winch Control
24.	INST-11	Motor Coupler Guard...
25.	INST-12	Grease Daily (Arrow)
26.	SPINST-13	Push To Reverse
27.	INST-15	Flipper Down / Up
28.	INST-16	Grease Weekly Arrow
29.	INST-39	Oil Daily Arrow
30.	INST-44	California Proposition 65
31.	INST-46	Autofeed Basic Info...
32.	INST-48	Disc/Drum Lock Tube
33.	INST-49	Disc/Drum Lock Pin
34.	INST-53	Hydraulic Oil...Hydrex XV...
35.	INST-76	Yoke Lift Down / Up
36.	INST-90	Stabilizer Up / Down
37.	INST-95	Electric Plug-In Schematic
38.	INST-101	Canada Engine Decal
39.	INST-109	Basic Maintenance Check List
40.	INST-169	Lubricate Cutter Head Bearings
41.	INST-199	Grease Axle Torsion Arm Bushing...
42.	INST-210	Winch Clutch Lock Pin Unlock / Lock (Australia)
43.	INST-211	Winch Clutch Lock Pin Lock / Unlock
44.	INST-212	Winch Clutch Handle Engage / Disengage
45.	INST-229	Push to Activate Momentary Feed/Reverse

NOTICE Some decals are for optional equipment. Decal locations may vary, these are general locations. If any decals become damaged, replace immediately.

DECAL LOCATIONS

Decal locations may vary, these are general locations.

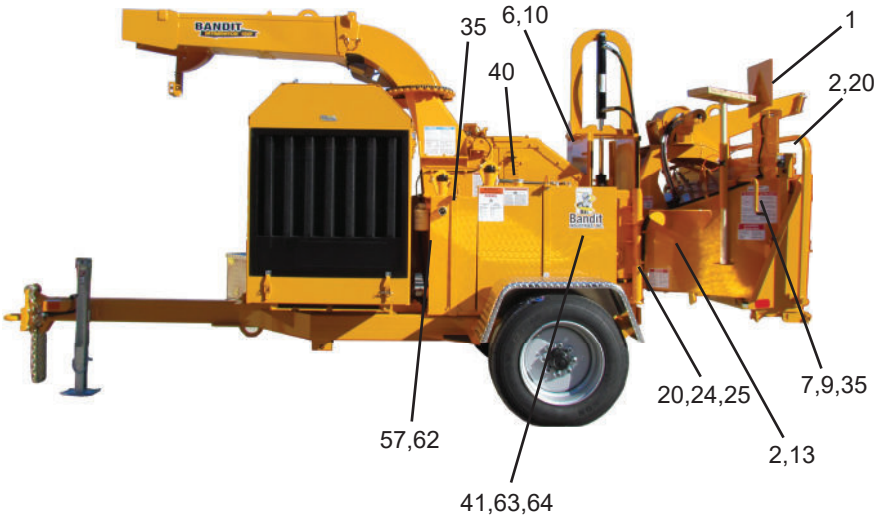

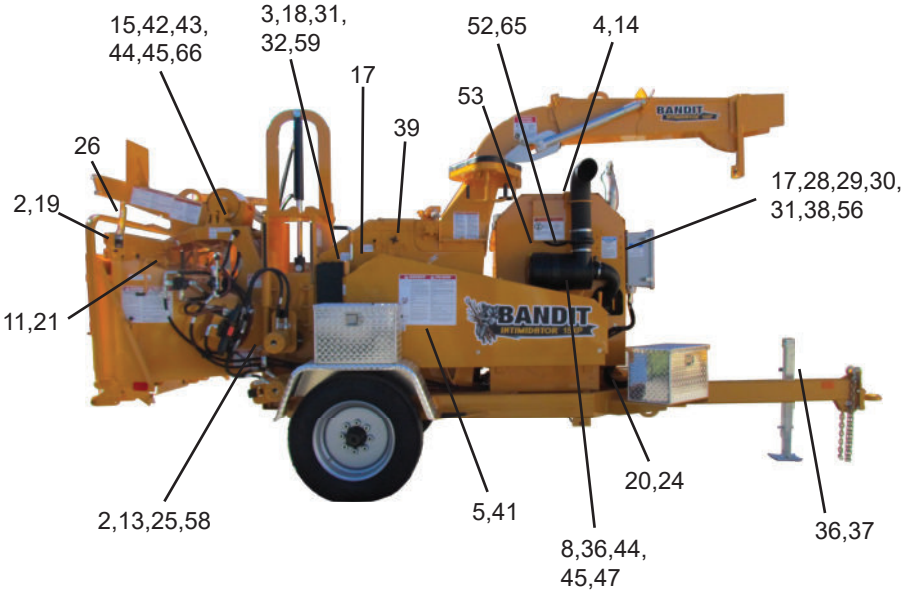

DECAL LOCATIONS

Modifications and/or additions of decals to this list will happen.
Consult chipper dealer or manufacturer for most current decal package.

LOCATION	NUMBER	DESCRIPTION
46.	INST-230	Hydraulic Bump Bar Reset
47.	INST-231	Hydraulic Bump Bar Stop
48.	INST-270	Unlatch Before Closing Infeed Tray
49.	INST-276	Test Trailer Brake System
50.	INST-294	Start Up
51.	INST-382	LOR Controls...
52.	N-02	Maintain Lubrication...
53.	N-03	Service Required Under Beltshield...
54.	N-05	Frequently Adjust...PTO...
55.	SPN-06	Decal Maintenance...
56.	N-07	Clutch Operation...
57.	N-09	Adjustable Feed Speed...
58.	SPN-11	Correct Knife And Hardware...
59.	SPN-53	Rope/Line Shear Maintenance...
60.	N-70	Patents...
61.	SPW-01	Do Not Go Near Oil Leaks...
62.	SPW-02	Diesel Fuel Only...
63.	SPW-03	Gasoline Fuel Only...
64.	SPW-04	Frozen Battery Can Explode...
65.	SPW-08	Wear Personal Protection...
66.	SPW-10	Hydraulic Winch...
67.	SPW-27	Creating Sparks
68.	SPW-30	Cable Rope Shear Req'D Maintenance
69.	SPW-31	Explosion Hazard
70.	SPW-40	Hydraulic Winch...
71.	900-8900-32	Basic Safety Decal Kit (Options may require additional decals)
72.	900-8910-74	Bandit Model 15XP Logo Decal Kit
73.	900-8901-45	Bandit Model 1390 Logo Decal Kit
74.	900-2909-94	Red Reflective Decal
75.	900-2909-95	Amber Reflective Decal
76.	900-9901-69	Reflective Conspicuity Tape (Red/White)

Additional Decals for Machine Equipped With A Track Undercarriage - Consult dealer or manufacturer for general locations.

77.	SPD-19	...Minimum 10 Feet Away From Tracks...
78.	SPD-38	Do Not Entangle Feet...
79.	INST-137	Remote / Tether
80.	INST-261	Remote Starting Procedure - Kar-Tech
81.	SPW-06	Do Not Attempt...Slope Of More Than...
82.	SPW-07	Do Not Move Machine...Horn Is Blown...
83.	SPW-11	Do Not Leave Unit Parked On A Slope...
84.	OL-274	Gasoline Only
85.	OL-312	Diesel Only
86.	OL-313	Hydraulic Only

NOTICE Some decals are for optional equipment. Decal locations may vary, these are general locations. If any decals become damaged, replace immediately.

DECALS

Decals located on your Bandit equipment contain useful information to assist you in operating your equipment safely. Some of the decals on your machine and their location are shown in this section.

It is very important that all decals remain in place and in good condition on your machine. Please follow the care and instructions given below.

1. You should use soap and water to keep your decals clean. Never use mineral spirits or any other abrasive cleaners.
2. Immediately replace any missing or damaged decals. The location the decal is going to be applied to must be clean and dry, and at least 40°F (5°C) before applying decal.
3. When the need arises to replace a machine component with a decal attached, be sure and replace the decal.
4. Replacement decals are available, and can be purchased from the manufacturer or your Bandit Dealer.
5. Peel back about half of the backer paper on the decal. Position it on the flat, dry, clean surface so it is smooth and secure. Peel off the remainder of the backer paper as you continue to stick the decal on the surface.
6. Rub decal from the center outward to remove air bubbles and to secure contact.
7. Combination English / Spanish decals are typically standard. Other foreign language decals are available and may be purchased. Mail translated decals required to Bandit Industries, Inc.

EXAMPLES:

NOTICE

DECAL MAINTENANCE IS THE RESPONSIBILITY OF THE OWNER OF THIS MACHINE. KEEP DECALS LEGIBLE. DECALS (ETC.) ARE AVAILABLE IN OTHER LANGUAGES.

CONTACT: PARTS DEPARTMENT
6750 MILLBROOK RD.
REMUS, MI USA 49340
PHONE (888) 748-6348

⚠ DANGER

DO NOT insert fingers or amputation could occur.

DO NOT perform any maintenance until belts inside this hole have completely stopped moving.

NOTICE

THE CLUTCH SHOULD NOT BE ENGAGED OR DISENGAGED AT ENGINE SPEEDS ABOVE LOW IDLE.

DO NOT operate this Clutch/PTO unless proper adjustments and lubrication are maintained per the Clutch/PTO Manufacturer's Manual. Different brands and models require different service and operation procedures. New Clutch/PTO's require more frequent adjustment.

GOOD OPERATORS DON'T WASTE MONEY!

Clutches will fail, glaze over, and burn up from improper adjustment. This will cost the owner of this machine thousands of dollars to repair. A well maintained, correctly adjusted clutch should function properly for years.

LEAVING THE CLUTCH DISENGAGED EVEN FOR SHORT PERIODS OF TIME WILL REDUCE PILOT BEARING AND CLUTCH PLATE LIFE! REFER TO CLUTCH MANUAL FOR OPERATING AND MAINTENANCE PROCEDURES.

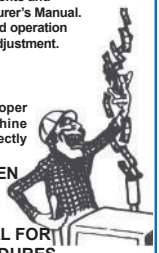

⚠ DANGER

DO NOT sit, stand, lay, climb or ride anywhere on this machine while it is running, operating or in transit.

YOU WILL BE INJURED!

⚠ DANGER

AVOID INJURY OR DEATH!

DO NOT OPERATE THIS MACHINE UNLESS:

- Only properly and fully trained people are used.
- Wearing clothing and personal protective equipment per ANSI Z133 and OSHA 29-1910 standards.
- Constantly prepared and positioned to activate the feed control bar.
- All guards and covers are secure and in place.
- Only factory approved pins, guards and replacement parts are used.
- All safety devices and controls are operational.
- Never allow hand, foot or body part to enter infeed hopper during operation or while running.
- All decals are legible, in place and operator thoroughly understands them.
- Never open chipper hood cover while disc/drum is turning or engine is running.

Follow all safety and operational instructions per manuals decals, video, ANSI Z133 and OSHA 29-1910 standards.

⚠ WARNING

DO NOT GO NEAR LEAKS!

- **Pressured oil easily punctures skin causing injury, gangrene or death.**
- **Seek immediate medical care.**
- **Do not use finger or skin to check for leaks.**
- **Remove hydraulic pressure or load before loosening fittings.**

⚠ DANGER

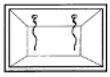

LAST CHANCE STOP CABLES FOR EMERGENCY USE ONLY!

Any Contact with infeed rollers will cause serious injury or death. The "Last Chance Stop" is a means of stopping/reversing the feed rollers if a negligent operator doesn't follow the safety rules and finds themself in trouble!

DO NOT RELY ON THE "LAST CHANCE STOP" TO DISOBEY OPERATOR RULES!!

"Reaching in" is usually associated with trying to hand feed small wood debris into the feed rollers.

DO NOT reach or kick into infeed hopper for any reason!

DO NOT hand feed small wood debris into feed rollers!

DO feed small wood debris with wooden push paddle, or throw material on top of big wood as it feeds!

DO always be positioned and prepared to activate forward-off-reverse control bar!

DO always follow operation and safety instructions! (ANSI, OSHA and manufacturer)

DO NOT REACH IN!

DO NOT operate this machine unless you have read the operators manual, read decals, watched video tape and have been thoroughly trained for safe operating procedures!

The "Last Chance Stop" does nothing for the foolish operator that kicks material into the infeed hopper. This can cause loss of foot, leg or death. Don't kick into infeed!

⚠ DANGER

BRUSH CHIPPERS ARE VERY DANGEROUS MACHINES TO OPERATE! READ & BELIEVE THIS WARNING DECAL!

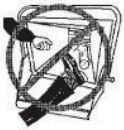

The chipper feedrolls are VERY DANGEROUS. They are designed to pull large diameter trees of any length into the chipper. Pulling your hand, arm, foot or entire body through the machine is much easier than pulling a tree. FOLLOW the operating instructions in the operator's manual, and ALWAYS be in a position to activate the *Forward-Off-Reverse Control Bar*. NEVER take chances pushing wood too far into the infeed hopper of the chipper. NEVER use your feet to try to kick wood into the machine. There have been ACCIDENTS involving the feed rolls, resulting in the amputation of hands, arms, feet, legs and DEATH. DO NOT let this happen to you!

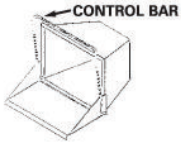

DO NOT open the chipper hood without letting the chipper disc come to a complete stop. THIS MEANS A COMPLETE STOP - NOT ALMOST! WAIT at least 3 minutes before disengaging the hood lock pin.

NEVER operate the chipper without the hood lock pin SECURELY installed and the hood lock pin padlock LOCKED. Failure to do this will allow the chipper hood to slam to the open position and possibly injure someone.

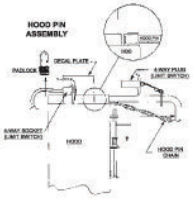

There have been ACCIDENTS, all of them were SERIOUS INJURIES or DEATH involved with chipper hoods flying open and hitting someone. In ALL of the cases the hood lock pin was NOT INSTALLED PROPERLY. DO NOT operate this chipper if the hood lock pin is not LOCKED INTO POSITION.

DO NOT OPERATE THIS MACHINE UNLESS YOU HAVE READ THE OPERATOR'S MANUAL AND HAVE BEEN TRAINED FOR SAFE OPERATING PROCEDURES!

AUTOFEED OPTIONS

AUTOFEED SYSTEM

Consult the original manufacturer's manual for your chippers
Autofeed operating and maintenance procedures

When processing material through the chipper, the feed system will automatically stop when the engine drops below a preset RPM point. The engine is constantly being monitored by an adjustable electronic speed switch. The switch can be adjusted so that at a given RPM, an electronic relay system will operate the hydraulic solenoid valves to stop the feedwheels until the engine has recovered speed. The patented "Autofeed Plus" system will reverse the feedwheels for a set period of time and then stop until the engine has recovered speed. Both autofeed systems will then automatically turn the feed on to resume forward travel.

Due to required components and equipment options a machine may have various types or brands of autofeed systems. Each chipper is shipped with the original manufacturer's manual for the autofeed system it is equipped with.

For the approximate autofeed settings on all optional autofeed systems refer to page 28 of the chipper manual. For part numbers on the hydraulic portion of the autofeed systems refer to pages 116 - 117 of the chipper manual. Refer to the Bandit Controls manual for more information.

Do not power wash the digital tach hour meters. Pressure causes unwarranted damage. **Do not spray tach, this will void warranty.**

PART NUMBERS FOR AUTOFEED DIGITAL TACH HOUR METERS

IEC (formerly ESI Intelli-Feed)

Part Number: 900-2908-11

For Service Call: 1-815-985-0383

L.O.R. MFG.

Part Number: 900-2906-82L

For Service Call: 1-866-644-8622

BANDIT CONTROLS

AUTOFEED TERMINOLOGY

PPR Pulses per revolution. On magnetic pick-up machines, this setting will be the number of teeth on the gear or sprocket it is reading. On alternator pick-up machines, the setting will need to be obtained from your local dealer or Bandit Industries.

Mag Pick-up Magnetic pick-up, also called pick-up probe. This is normally located screwed into the flywheel housing on the engine block. It can also be found on the clutch housing or chipper shaft. See Figure 1.

Dump Block This block was used previously. It is located near the fender on the frame of the chipper. An easy way to find it is by following the hydraulic hose from the pump. The block will be the first thing it is hooked into. This block also contains the main relief. When the solenoid is activated (indicated by the light in the connector) the feedwheel(s) are stopped by the autofeed system. See Figure 2.

Reverse Valve Located on the infeed hopper of the chipper. It can be recognized by a valve with one solenoid bolted on a square block. The solenoid is approximately 2-1/2" (63.5mm) diameter x 2-3/4" (69.9mm) long. It will have two wires coming from it or on the newer machines it will have a connector with a light screwed to it. When the solenoid is activated (indicated by the light in the connector) the feedwheel(s) are reversed by the autofeed plus system. See Figure 3.

Dual Coil Reverse Valve This will normally be located on the infeed hopper of the machine. It can recognized by a valve with two solenoids bolted on a square block. The solenoid is approximately 2-1/2" (63.5mm) diameter x 2-3/4" (69.9mm) long. It will have two wires coming from it or on the newer machines it will have a connector with a light screwed to it. The feed coil must have power (indicated by the light in the connector) for the feedwheels to feed and pull material in. See Figure 4.

Solenoid Electronically activated to produce a magnetic pull which shifts the spool inside the hydraulic valve. Shifting of the spool changes oil flow direction from operating forward or dumping oil to tank.

High High or HI is the setting when the feedwheels will turn back on (feeding operation).

Low Low or LO is the setting when the autofeed will reverse (if equipped) the feedwheels and then turn the feedwheels off.

Back Amount of time in seconds the feedwheels will back the wood away from the cutter disc/drum. Normally this will be set at 180 milliseconds (139 for model 12XP/12XPC/990/915/95) (IEC) or .3 seconds (LOR).

Figure 1

Figure 2

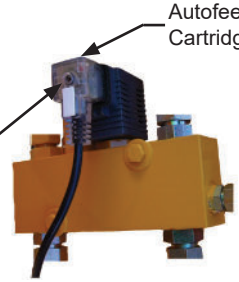

Figure 3

Figure 4

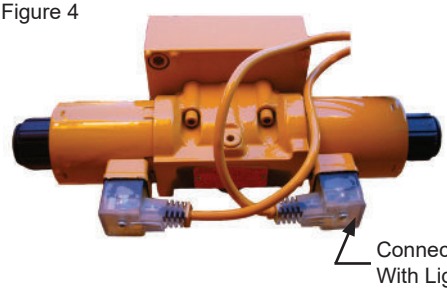

TROUBLE SHOOTING GUIDE

PROBLEM	POSSIBLE CAUSE	SOLUTION
No Display	- Gauge not getting power.	- Check continuity of Red wire to a clean power source. - Check fuse (LOR - 7.5 amp; ESI - 10 amp). - Check connection at engine disable plug at hood pin. - Check key switch for switched power in and out.
	- Gauge not properly grounded.	- Check continuity of Black wire to ground connection.
	- Dead battery.	- Charge or replace.
Feedwheels Do Not Stop (Autofeed Doesn't Activate)	- Loose chipper belts.	- Tighten or replace per manual specifications.
	- Clutch slipping.	- Adjust per clutch manufacturer's recommendations.
	- Sticky dump cartridge.	- Lightly tap on dump block to free up. - Take cartridge out and clean free of debris. - Replace solenoid and/or cartridge.
	- No power to dump valve solenoid.	- Check fuse on dump valve signal wire (if equipped). - Check continuity on the dump valve wire (normally green wire).
	- Faulty tach.	- Check autofeed tachometer settings.
	- Low or "LO" setting wrong.	- Check autofeed tachometer settings.
Feedwheels Do Not Re-engage	- Engine RPM not reaching HI set point on tach	- Check for stretched or out of adjustment throttle cable. This would not let engine reach full RPM. - Check HI RPM setting on gauge to make sure it is not set too close to full RPM of engine. HI setting should be 150 to 200 RPM below full engine RPM.
	- Sticky dump cartridge.	- Lightly tap on dump block to free up. - Take cartridge out and clean free of debris. - Replace solenoid and/or cartridge.
	- System pressure.	- Check and readjust per manual specifications.
	- Faulty tach.	- Consult local dealer or Bandit Industries.
No Signal	- Engine not running.	- Normal operating condition.
	- Bad signal wire.	- Check continuity of the signal wire (white wire in autofeed harness).
	- No signal from alternator.	- Check for at least 3.5 VAC output at idle and 10-20 VAC at HI RPM
	- No signal from mag pick-up.	- Check for approx. 2-7 VAC at idle and approx. 14-20 VAC at HI RPM. Testing must be done at the two wires coming out of mag pick-up after disconnecting. Remove and clean off magnet at end. Reinstall by turning it in until it bottoms out. Then back off approx. 1/2 a turn. Lock with jam nut.
	- Bad mag pick-up.	- Replace mag pick-up.
Gauge Jumped Program	- Low voltage to tach.	- Check engine disable plug at hood. Clean and check for tight connection. Re-install using dielectric grease.
	- Shorts in wire harness.	- Check for possible worn wires or loose connections.
	- Faulty ground.	- Check black wire for a good ground.
	- Faulty tach.	- Consult local dealer or Bandit Industries.

TROUBLE SHOOTING GUIDE cont.

PROBLEM	POSSIBLE CAUSE	SOLUTION
Feedwheels Run In Reverse From Normal	- Backup time set wrong.	- Reset backup time. Normal setting is 180 milliseconds (139 for Models 12XPC/12XP/15XP/95/990) (IEC) or .3 seconds (LOR)
	- Sticking reverse valve.	- Check solenoid operation. - Override cartridge manually by sticking a small allen wrench in the end of the solenoid. - Replace solenoid and/or cartridge.
	Type settings programmed wrong.	- Reprogram or consult local dealer or Bandit Ind

NOTICE Autofeeds with dump blocks can be unplugged and run manually. Autofeeds with dual output block will need a jumper plug. This can be a good test to determine if you problem is hydraulic or electronic.

LOR Jumper Plug Part No.: 900-2913-51	IEC Jumper Plug Part No.: 900-2914-09

APPROXIMATE DIGITAL AUTOFEED SETTINGS
(FOR ALL AUTOFEED SYSTEMS - REFERENCE ONLY)

NOTICE Refer to the Completion/Check Sheet, that is shipped with the machine for the correct engine rpm. If needed, contact your local dealer or Bandit Industries.

Some Current Engine Types	Maximum RPM	PPR	Off RPM	On RPM	Feed Reverse Time
GM 4.3 - 130 Hp	2600	2	2400	2150	180 / .3
GM 5.7 - 165 Hp	2800	2	2700	2400	180 / .3
CAT C3.4 / Perkins 854F - 74 Hp	2200	N/A	2100	1750	180 / .3
CAT C4.4 / Perkins 1104D - 97 Hp	2375	126	2280	2030	180 / .3
CAT C4.4 / Perkins 1104D - 114 Hp	2375	126	2280	2030	180 / .3
CAT C3.4 / Perkins 854F - 112.5 Hp	2200	N/A	2100	1750	180 / .3

OPERATION

⚠ DANGER

Avoid moving parts. Keep hands, feet, and clothing away from power driven parts. Keep all guards and shields in place and properly secured. Contact with moving parts will result in serious injury or death.

Never feed any materials that might contain wires, stones, nails, metal objects, or any foreign object which may damage the knives and become dangerous projectiles.

Do not operate this machine without the hood pin in place. Do not operate the machine with any type of makeshift hood pin or an improperly installed hood pin. The hood pin must be padlocked.

⚠ WARNING

There must be at least two qualified and trained operators at the work site. They must be positioned in safe working locations, following safety procedures and instructions, and aware of each others' whereabouts.

NOTICE

Do not operate this machine unless all machine controls operate properly. They must function, shift smoothly and accurately at all times.

Make sure machine safety guards are properly installed and safety devices are functioning properly.

This chipper is designed to be hand fed only. Do not feed wood with any type of knuckle boom loader, front end loader, or mechanical device. It will cause damage to the machine.

Check laws and regulations. Know and obey all laws and regulations that apply to your work situation.

Make sure that all required maintenance has been completed before following the set-up procedures.

SET-UP

Before starting the machine, read all safety procedures and watch the start-up and safety videos.

- Prepare and set up the work site. Make sure there are no loose tools, cans, lines or any other foreign objects in the area. Anything not in use must be stored in a tool box or stowed away.
- Stabilize the infeed hopper and tongue if unhooked from a tow vehicle.
- Do not rely on a tongue jack to keep the machine stable if unhooked from a tow vehicle.
- Make sure to chock the tires.
- Fold the infeed tray out.
- Check for and remove any foreign objects in the infeed hopper.
- If using a winch, make sure the machine stays hooked to a tow vehicle.
- Remove transport bolt and nut, then make sure the discharge is pointed in a safe direction and locked into place.
- Adjust the flipper as needed.
- Make sure all personal protective equipment (PPE) is worn. Examples of PPE: hard hat, face shield, gloves (no gauntlet style gloves or secured fit), ear protection, high visibility vest, and steel toe boots.
- Follow all start-up procedures.

START-UP

1. Follow all engine manufacturer's recommendations for starting the engine.
2. Bump the clutch handle until the drum or disc is moving, then fully engage the clutch handle.
3. Throttle the machine up.

MACHINE OPERATION

1. Once the machine is at full RPM, engage the feedwheels in the forward direction.
2. Refer to feeding diagram in the SAFETY PROCEDURES section.
   A. Follow the travel path.
   B. Feed only from the side of the infeed tray.
   C. Release the limb or log.
   D. Turn away and keep moving after releasing the limb or log and from the infeed hopper.
3. Feed large, or butt end, of the branch or log into the infeed hopper first.
4. If the limb or log does not feed, it may need repositioned. To reposition, read the following steps:
   A. Reverse the feedwheels, reposition the limb or log, and feed again.
   B. The log may need to be removed from the machine to a safe work area and trimmed before attempting to feed again if it still will not feed.

MACHINE OPERATION

NOTICE

Chippers are not designed to cut chunk wood, dimensional lumber including rail road ties, or end cut logs standing on end. Chipper knives coming in contact with a flat surface puts an extreme shock load on the chipper drum or disc components and bearings. This can cause damage to the machine that will not be covered under warranty.

SHUT DOWN

1. Stop feeding material.
2. Allow the machine to clear out any remaining material.
3. Make sure the top feedwheel is in the lowered position.
4. Throttle the machine down.
5. Disengage the clutch.
6. Wait for the chipper drum or disc to come to a complete stop.
7. Shut the engine off.
8. Remove the key, and make sure it stays in your possession.
9. Allow the machine to cool down
10. Remove all debris, wood chips, sawdust, leaves, etc. from the machine.
11. If transporting the machine, follow the transport procedures.

MACHINE ORIENTATION REFERENCE

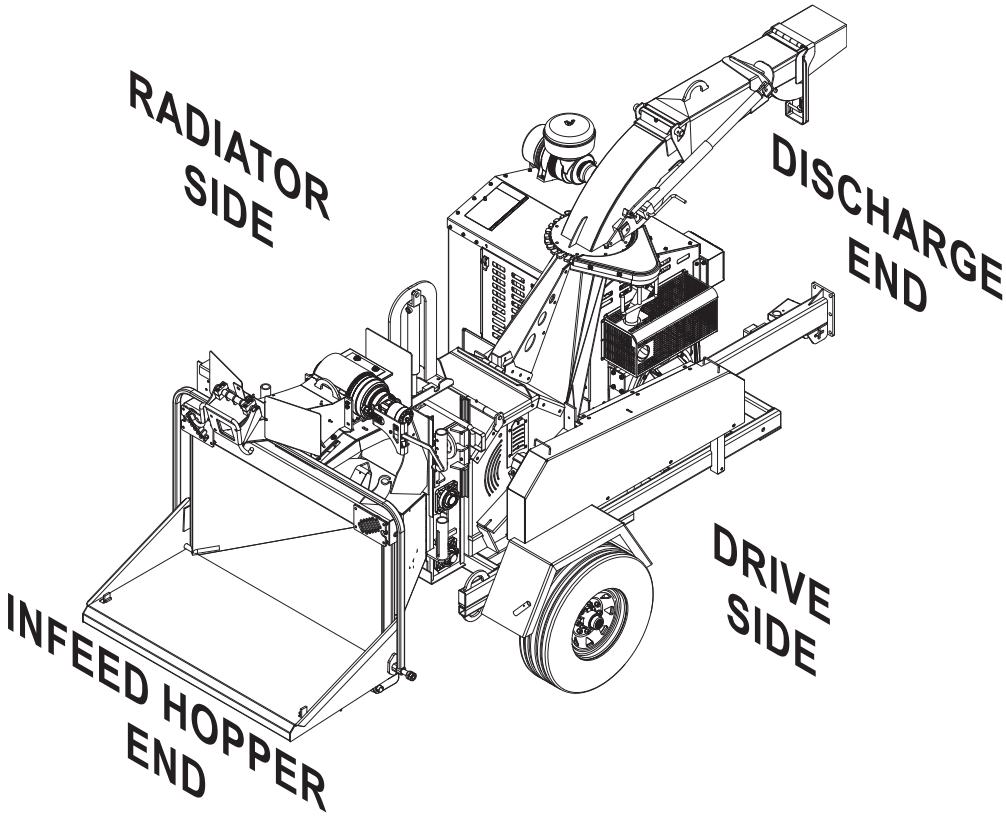

CONTROLS

Basic Location of Controls and Components

LOCATION SHOWN

1. Foot Pad Jack
2. Clutch Handle
3. Chipper Belts / Pump Belts
4. Lug Nuts
5. Feedwheel Trap Door
6. Infeed Hopper
7. Folding Infeed Tray
8. Feedwheel Control Bar
9. Hydraulic Control Valves
10. Yoke Lift Cylinder “Optional”
11. Swivel Discharge
12. Discharge Chute
13. Discharge Flipper Adjuster
14. Autofeed Controls “Optional”
15. Engine Controls, Adjusters
16. Electric Engine Throttle Adjuster (if equipped)
17. “Bandit” Lever Throttle Adjuster (if equipped)

NOT SHOWN

Knives & Hardware
Feedwheel Motor Coupler
Wooden Push Paddle
Adjustable Height Discharge “Optional”

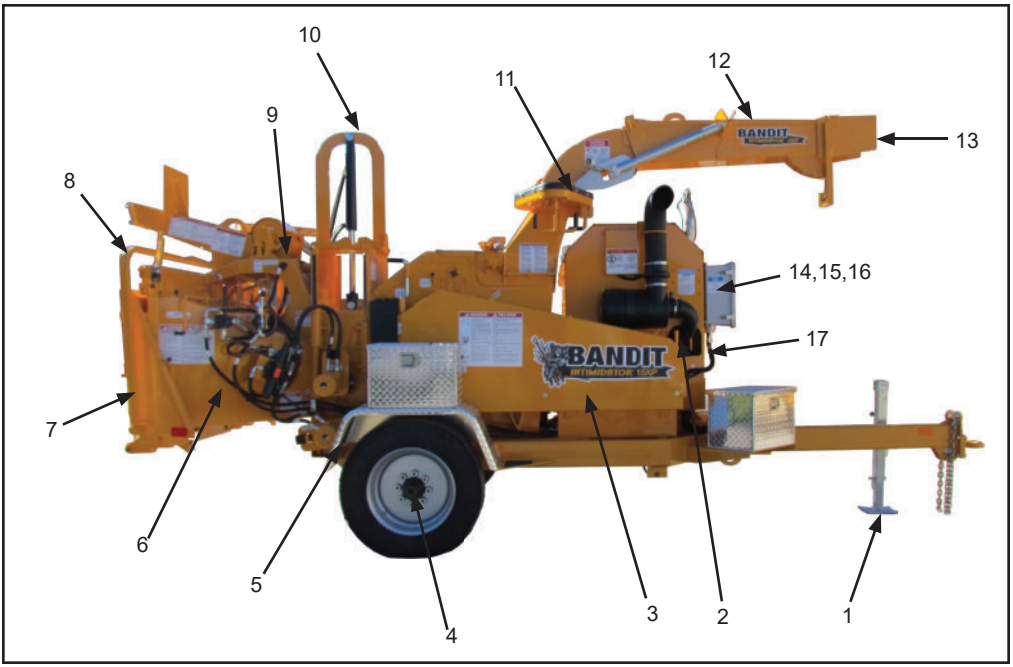

CONTROL OPERATING PROCEDURES

Feedwheel Control Bar:

The feedwheel control bar operates the feedwheel(s). To make the feedwheel(s) operate so they are pulling material into the machine, pull the control handle towards the operator away from the chipper. To make the feedwheel(s) operate so they are pushing material out of the machine, away from the chipper disc/drum, the control handle should be pushed away from the operator, away from you and towards the machine. The control bar is in the off position when it is in the center location.

Feedwheel Trap Door:

⚠DANGER

Before opening or closing the feedwheel trap door: disengage clutch, wait for the disc/drum to come to a complete stop, turn off engine, remove the ignition key, make sure the ignition key is in your possession, install the disc/drum lock pin, and disconnect the battery. In the event that dirty material is being run through the chipper the feedwheel trap door can be opened.

Yoke Lift Control - Optional:

The yoke lift control operates the top yoke lift cylinder. To lower the yoke, push the yoke lift control handle towards the tongue of the machine. To raise the yoke, push the yoke lift control handle towards the infeed hopper of the machine. The yoke lift control handle is in the flotation position when it is in the center location.

Winch Control - Optional:

The winch control operates the winch option. To make the winch reel out push the winch control valve handle in, away from the operator. To make the winch pull material in retract the winch clutch lock pin, pull the clutch handle up, and pull the winch control valve handle out, towards the operator. The winch also has a spool rotation lock, make sure this is disengaged to free wheel line out of the spool. Note: If the winch control is an electric switch, push the switch out towards the material to make the winch reel out and push the switch away from the material to make the winch pull material in.

Selector Valve Control - Optional:

The selector valve control allows the operator to change the operation function from the feed function to the winch function or from the winch function to the feed function. The feedwheel(s) will not operate when the selector valve is in the winch function and the winch will not work while the selector valve is in the feed function. To have the feedwheel(s) operate the selector valve needs to be pushed in, away from the operator. To operate the winch the selector valve needs to be pulled out, towards the operator.

Discharge Swivel Control - Optional:

NOTICE Remove transport bolt and/or lock pin BEFORE operating this function.

The discharge swivel control operates the discharge rotate. To make the discharge swivel to the right push the discharge swivel control handle down, towards the ground. To make the discharge swivel to the left pull the discharge swivel control handle up, away from the ground. The discharge swivel control handle is in the off position when it is in the center location. Do not use the hydraulics to secure the discharge when transporting the chipper. Make sure to install the lock bolt and nut before transporting.

Discharge Hydraulic Flipper Control - Optional:

The discharge hydraulic flipper control operates the discharge flipper cylinder. To make the discharge flipper rotate up pull the discharge hydraulic flipper control handle up, away from the ground. To make the discharge flipper rotate downward push the discharge hydraulic flipper control handle down, towards the ground. The discharge hydraulic flipper control handle is in the off position when it is in the center location.

Hydraulic Tongue Jack Control - Optional:

NOTICE Remove lock pin BEFORE operating this function.

The hydraulic tongue jack control operates the hydraulic tongue jack cylinder. To raise the front of the machine pull the hydraulic tongue jack control handle up, away from the ground. To lower the front of the machine push the hydraulic tongue jack control handle down, towards the ground. The hydraulic tongue jack control handle is in the off position when it is in the center location. Install the lock pin at the desired tongue height.

CONTROLS

CORRECT OPERATION OF FEED CONTROL BAR

FOR ALL CHIPPERS DESIGNED TO BE "HAND FED".

IF YOU ARE IN THE AREA OF THE INFEED HOPPER, ALWAYS BE PREPARED TO OPERATE AND WITHIN EASY REACH OF THE FEED CONTROL BAR.

USE THE 1" JAM NUT TO ADJUST CONTROL BAR PIVOT TENSION.

ADJUSTING TENSION FOR CONTROL BAR PIVOT AND LAST CHANCE CABLE PULL

NORMAL WEAR REQUIRES PERIODICAL ADJUSTMENT OF PIVOT TENSION.

FEED CONTROL BAR SHOULD PIVOT WITH LITTLE EFFORT, BY HAND OR WITH A PULL ON "LAST CHANCE" CABLES. LUBRICATE PIVOT POINTS OF FEED CONTROL BAR WEEKLY.

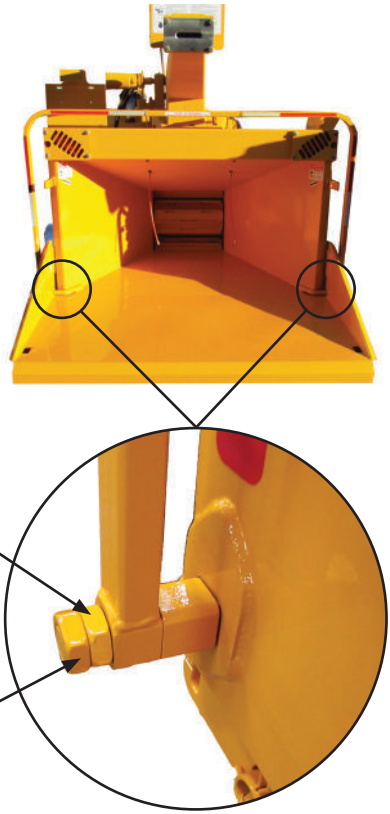

ADJUST PIVOT TENSION WITH THE TIGHTNESS OF INSIDE FRICTION NUTS.

SECURE ADJUSTMENT WITH OUTSIDE JAM NUTS.

WINCH OPERATING PROCEDURES

⚠DANGER

Brush being fed into the chipper infeed hopper can snag an extended winch line. The knives on the spinning disc/drum can grab and pull in the winch line at a high rate of speed resulting in serious injury or death to workers nearby.

⚠DANGER

The winch line is under tension at times and could suddenly release, snapping back into the operator causing serious injury or death.

⚠DANGER

Never operate the hydraulic winch with the wood chipper detached from the towing vehicle. The load may move the wood chipper or pull the tongue off the support blocking.

⚠DANGER

Climbers' ropes and other lines present at the work site can become entangled in brush being fed into the chipper. The knives on the spinning disc/drum can grab and pull in ropes at a high rate of speed resulting in serious injury or death to workers nearby.

⚠DANGER

Most winch lines contain a metal hook at the end. If the metal hook enters the infeed hopper, it could be ejected out of the discharge chute at a high rate of speed causing serious injury or death.

⚠DANGER

Make sure there is outbound tension on the winch line whenever the winch line is being powered out. Using the hydraulic control to power out the winch line rather than free spool the line out could result in the line becoming tangled around the spool and wind inward when the hydraulic lever is in the unwind position. If a worker is holding the winch line when this happens a potential nip point is created between the line housing and hook and also the winch line and material.

NOTICE

Before operating machine, you must have all potential operators; read and understand manuals and decals, watch the video and follow the recommendations.

⚠DANGER

Follow all winch operating procedures, if not followed severe injury or death can result.

- The intended use of the winch is to assist the operator with pulling large tree limbs to the wood chipper feedwheels without having to lift and carry.
- Pinch point hazards may develop during winching operations. The hydraulic controls are located on the side of the infeed hopper. Operating the winch is a one-man operation. Do not have one person operating the winch hydraulic control with another person operating or holding the winch line. The person holding the winch line could have his hand pinched when another person is operating the winch control.
- Winching large limbs to the wood chipper should be performed by one person.
- Stay clear when winching.
- Do not allow winch line or other ropes to be snagged and pulled into the chipper knives.
- Avoid becoming entangled in the winch line. Never place yourself between the brush and the winch line while using the winch line to pull large tree limbs toward the chipper.
- The metal hook at the end of the winch line entering the wood chipper could result in serious damage to the knives and other internal components causing the potential for injury to operators.
- When you are not using the winch, ensure that the winch line is retracted and stowed so that it cannot be pulled into the chipper.
- Never pull out the winch line while brush or limbs are feeding into the chipper.
- Never attach winch line to an installed choker if other limbs are feeding into the machine.
- Brush can snag winch line or climbers' ropes. Knives can grab and pull in line and anything attached to it at a high rate of speed.
- If you are in between the chipper and the winch line that is caught in the knives, the winch line will be pulled in at a very rapid speed and you will not have time to get out of its way. Death or serious injury may result.
- Do not overload the winch. The line can break or the choker can come off and strike a worker.
- Be aware of the hazards of winch line breakage. Ensure that everyone remains clear of the recoil area in the event of load or line breakage.
- Pull loads in a manner that avoids angles which could result in tipping or other unintended movement of the chipper and towing vehicle.

DINAMIC WINCH OPERATING PROCEDURES

Manual Controls

Winch Control Panel

⚠ WARNING

OPERATE HYDRAULIC WINCH PER INSTRUCTIONS!

Install the line to pull and feed from the bottom of the winch drum.

⚠ DANGER

Never reach into the winch, fairlead, or winch roller area.

OPERATING PROCEDURE

1. Winch operation is a one person job. This means the person who hooks the winch line to the wood material is the same person who engages the winch.
2. Place the feedwheel control bar in the off position. The chipper and towing vehicle must be blocked or anchored in a solid location.
3. Locate the handle on the winch unit and position it to the free spool mode by pulling the handle to the side then down to the bottom position. If the machine has a winch control panel on the side of the infeed hopper, position the toggle switch to the winch free spool position; the winch free spool indicator light should be on. While the winch is in normal operation or free spool mode the feed system will not work.
4. Pull the winch line to the material to be pulled. Attach the winch line securely to the wood material that you want pulled to the chipper.
5. Engage the winch by moving the handle to the side then up to the top position. If the machine has the winch control panel, position the switch in the winch engaged position.
6. Make sure everyone is clear. Use the winch control valve or the radio remote control (if applicable) to now pull the wood material towards the machine. Check that the controls operate in the correct direction.
7. If the machine has the optional feed assist, once the wood material is pulled to the machine, the optional feed assist can be pushed to momentarily operate the feed system with the feed control bar in the feed position to get the wood staged into the feedwheels. If the machine has the winch control panel, the winch control can momentarily be put in the slow feed mode to momentarily operate the feed system with the feed control bar in the feed position to get the wood staged into the feedwheels. With either winch system, re-hook the winch line as needed before starting the wood into the feedwheels.
8. Make sure the feed control bar is in the off position.
9. Unhook the winch line from the wood material and attach the end of the winch line end to the winch hook mount.
10. Reel the winch line in.
11. When the winch line is reeled in all the way, the winch line docking system will be activated and once the feed control bar is positioned in the feed position the feedwheels will begin feeding wood material.

RKI WINCH OPERATING PROCEDURES

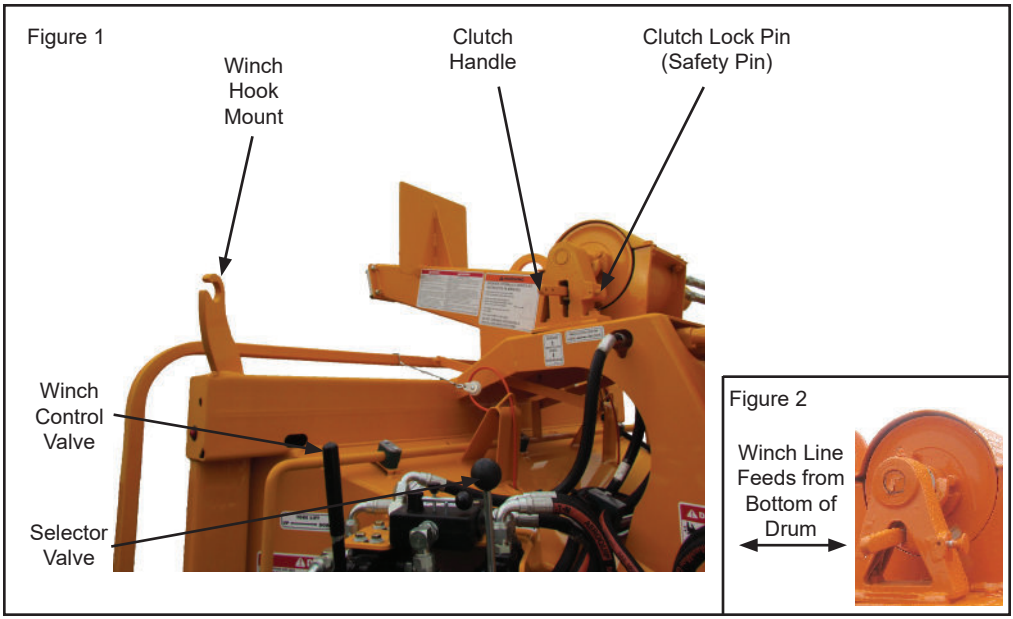

⚠WARNING

HYDRAULIC WINCH OPERATION PER WINCH MANUFACTURER!

Install the winch line to pull and feed from the bottom of the winch drum (see Figure 2). Remove excess bolt length on bolts after winch line is secured to the spool.

⚠DANGER

Never reach into the winch or winch roller area.

OPERATING PROCEDURE

1. Winch operation is a one person job. This means the person who hooks the winch line to the wood material is the same person who engages the winch.
2. Place the feedwheel control bar in the off position. Make sure the chipper and towing vehicle are blocked or anchored in a solid location.
3. Locate the selector valve and engage it to the winch position. The feed system should not operate with the selector valve in this mode.
4. Make sure the winch clutch is disengaged and pull the winch line to the material to be reeled in. Attach the winch line securely to the wood material that you want pulled to the chipper.
5. Make sure everyone is clear and then retract the clutch lock pin and then pull the clutch handle up to engage the winch clutch (see Figure 1). Make sure the handle is locked in position.
6. Use the winch control valve or the radio remote control (if applicable) to now pull the wood material towards the machine.
7. Once the wood material is pulled to the machine, unhook it from the winch line and make sure the it is completely reeled back in and out of the way. Attach the winch line to the winch hook mount. Make sure the winch line is clear of the feedwheel(s) or severe damage can occur if the winch line should enter the chipper.
8. Reengage the selector valve to the feed position.
9. Engage the feedwheels and begin feeding wood material.

CHIPPER HOOD ENGINE DISABLE PLUG OPERATION

This chipper hood engine disable plug is installed for safety purposes. It is designed to shut down the engine if the hood pin is not properly in place holding the chipper hood in the closed position. The system must be correctly maintained and operative at all times. If the disable plug is not correctly installed the engine will not start or run.

The chipper hood engine disable plug is located on top of the chipper hood. The chipper hood engine disable plug is made up of two parts: an electric socket and a disable plug. The electric socket is bolted to the chipper hood engine disable plug mount bracket and the disable plug is attached by a cable to the hood pin.

If the disable plug is not properly installed then the engine will not start or run. If the disable plug becomes disconnected while the chipper engine is running the engine will be shut down or be disabled from running. This is for safety purposes, to ensure that the hood pin is not removed and the chipper hood is not opened while the engine is running.

The chipper hood engine disable plug is wired to shut down the chipper engine. When the disable plug is pulled out of the electric socket the electric circuit is broken, disabling the engine.

NOTICE

The engine disable plug has a circuit fuse. If the engine will not start or run, check the fuse first before consulting the engine manufacturer's manual. Circuit fuse locations: Caterpillar / Perkins - located at the "BATT" wire near the ignition switch, Cummins - located by engine manufacturer near the starter (wires labeled "POW"), John Deere - located by engine manufacturer "Short Stop" circuit breaker by the ignition switch on the instrument panel or fuse by the ECM, and Deutz, Hatz, Honda, Kohler, and Robin - located at the battery post on the starter.

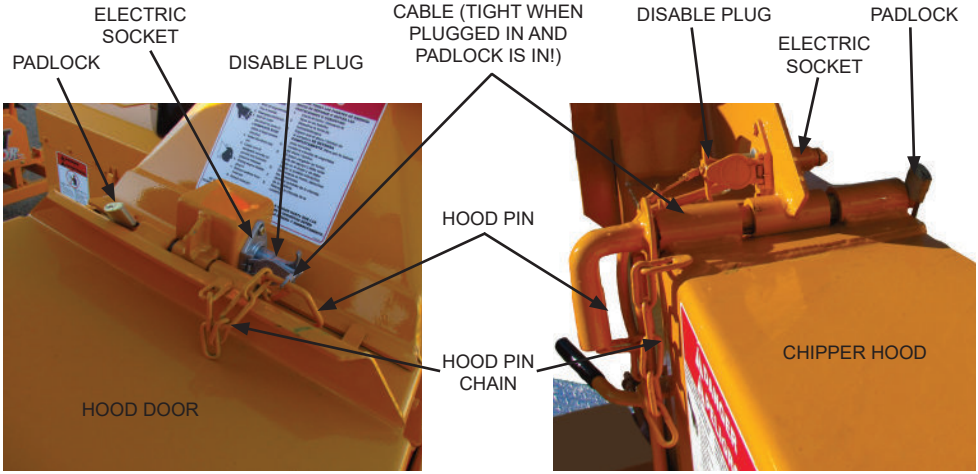

DRUM CHIPPER DISC CHIPPER

DRUM HOUSING AIR VENTS

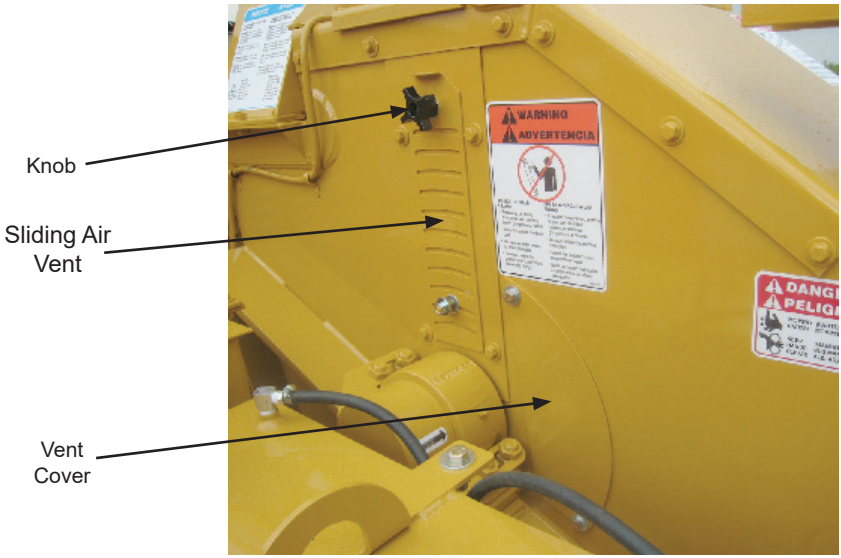

There are two air vents on each side of the drum housing of your machine. The air vents can be opened or closed to adjust the chip throwing to your particular application. The chip throwing distance has many variables for example: type of material chipping, size of material chipping, the machine engine size, if machine is equipped with autofeed or not, etc.

⚠DANGER

Before adjusting the air vents; disengage clutch, wait for the disc/drum to come to a complete stop, turn off engine, remove the ignition key, make sure the ignition key is in your possession, install the disc/drum lock pin, and disconnect the battery.

The vent cover can be bolted on or removed from the drum housing, depending on your needs. There is one vent cover on each side of the drum housing. The beltshield may have to be removed on some machines, depending on model and options, to access the vent cover on the right side.

The sliding air vent can be adjusted by loosening the knob and moving the vent to the open or closed position. There is one on each side of the drum housing.

OPTIONAL HYDRAULIC BUMP BAR OPERATION

⚠DANGER

Before attempting any type of maintenance, disengage clutch, wait for the disc/drum to come to a complete stop, turn off engine, remove the ignition key, make sure the ignition key is in your possession, install the disc/drum lock pin, and disconnect the battery.

⚠DANGER

The hydraulic bump bar is an optional device which may help prevent accidents. Do not rely on the hydraulic bump bar to prevent infeed accidents. Never reach or kick into the infeed hopper for any reason. Serious injury or death may result.

OPERATION

- The optional Hydraulic Bump Bar comes set from the factory and is non adjustable.
- If the Hydraulic Bump Bar is pushed, the feedwheels stop.
- After the Hydraulic Bump Bar has been pushed, the operator will need to reset it. Push the Hydraulic Bump Bar Reset towards the tongue of the machine. After the operator has done this, the feedwheels will operate again.
- If there is wood or a branch that is pushing the Hydraulic Bump Bar, the operator can push the button shown above to momentarily operate the feedwheels to reverse the wood back out. Then the operator can reposition the wood or remove the wood and cut the branch off before feeding again.

MAINTENANCE

- Before using the chipper everyday, test the Hydraulic Bump Bar for proper operation. The bump bar should operate smoothly and without binding. When the bump bar is activated with approximately 25-30 lbs (11-14 kg) of force, the feedwheels should stop and after the reset handle is activated the feedwheels will start again. The force to activate the Hydraulic Bump Bar can be checked with a belt tension gauge. If the Hydraulic Bump Bar is not operating correctly, the machine needs to be serviced immediately.
- Lubricate the Hydraulic Bump Bar pivot points with a dry lube weekly or as needed. Also, remove the reset pivot handle cover and the valve push bar cover on the bottom of the infeed tray and lubricate the pivots points with a dry lube.

SOLUTIONS - If the Hydraulic Bump Bar is not operating smoothly.

- Make sure the bump bar is not binding up and is operating smoothly, it may require a dry lube lubrication. Remove the covers on the bottom of the infeed tray and lubricate the pivot points with a dry lube.
- Make sure the bump bar is free from all debris and nothing is jammed around or in behind the bump bar.
- Test the force it takes to activate the Hydraulic Bump Bar with a belt tension gauge or similar type of spring gauge. The force should be approximately 25-30 lbs (11-14 kg).
- If everything else checks out, the detent in the bump bar valve may need to be checked, repaired, or replaced.

OPTIONAL SLIDING TONGUE

The optional sliding tongue is used when the chipper's tongue is not long enough to hook to the machine to a tow vehicle and have proper clearance when turning or backing up the machine.

⚠DANGER

Before attempting any type of maintenance, disengage clutch, wait for the disc/drum to come to a complete stop, turn off engine, remove the ignition key, make sure the ignition key is in your possession, install the disc/drum lock pin, and disconnect the battery.

1. Follow all pre-maintenance shut down procedures.
2. Remove the two 5/8" bolts and hardware from the side of the sliding tongue.
3. Pull the sliding tongue out approximately 20" until the next set of holes in the sliding tongue are aligned with the stationary tongue tube.
4. Reinstall the two 5/8" bolts and hardware. Two bolts must be used to pin the sliding tongue.
5. Tighten both sliding tongue bolts and automated lock nuts until they are snugged up to the tongue bushings, but still able to spin inside the bushings. If the bolts will not fit through the holes, an 11/16" or 21/32" drill bit can be used to remove debris from the hole.
6. Follow all transportation procedures to hook the machine to a tow vehicle and transporting it.

NOTICE

If the sliding tongue does not need to be extended for the towing vehicle, depending on hitch type and placement, reverse the procedure above and retract the tongue back to the non extended tongue length.

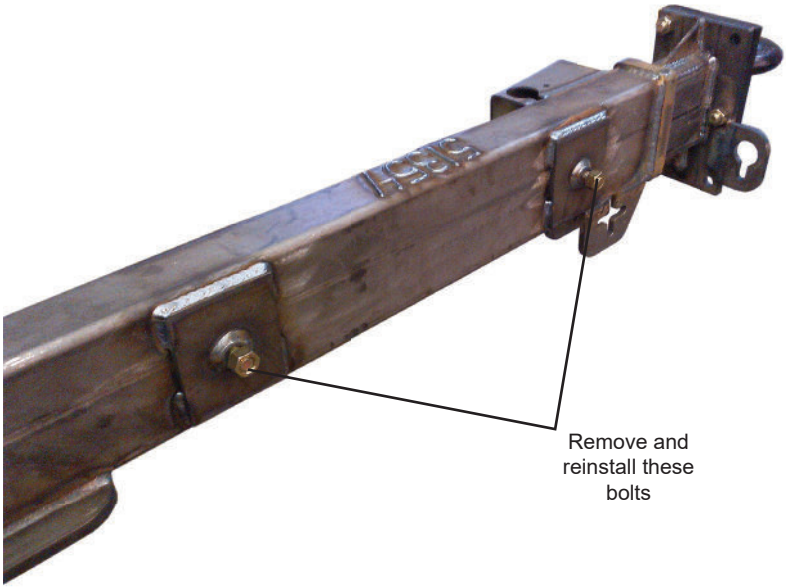

CONSULT THE ENGINE MANUFACTURER'S MANUAL FOR SPECIFIC CONTROLS, OPERATION, & MAINTENANCE FOR TYPICAL ENGINES

1. **Ignition Switch:** Turn the ignition switch key clockwise one stop (on position) to turn the electrical system on. The key should remain in the on position while the engine is running. Turn the key fully clockwise (start position) this will start the engine. To shut off the engine, return the key to the off position.
2. **Ignition Switch With Preheat:** The typical diesel engine may have a preheat system to assist in starting the engine during cold weather. To activate the preheat system, continue to hold the ignition key in the preheat position for 15 to 20 seconds, then attempt to start the engine. If the engine fails to start within 15 seconds, return the key to the preheat position, hold 10 seconds, and try starting again.
3. **Choke (if equipped):** Some gasoline engines may have a choke, pull the choke lever out to choke the engine. Push the choke lever in for normal engine operations.
4. **Throttle Adjustment (if equipped):** Some engines may have a knob or a handle for the throttle adjustment. Typically you would pull the knob out, or turn the handle to increase the engine R.P.M.'s. To decrease you would push in the knob or turn the handle the opposite way.
5. **"Bandit" Lever Lock Cable Throttle System (if equipped):** The Bandit throttle system has (2) positions, HIGH and LOW. Engine R.P.M. is controlled by moving the lever from one position to the other.
6. **Push Button Or Electric Throttle System (if equipped):** Some engines may have a push button or electric throttle adjustment. Engine R.P.M. is controlled by pushing a button or switch to raise or lower the R.P.M.
7. **Alternator Warning Light:** This light will glow when the alternator is not charging, or when the ignition switch is turned on and the engine is not running.
8. **Oil Pressure Warning Light:** This light will glow when the oil pressure is to low, or when the ignition switch is turned on and the engine is not running.
9. **Engine Temperature Warning Light:** This light will glow when the engine, or engine coolant, is above normal operating temperature. If this occurs allow the engine temperature to cool down. If the engine is overheating because of a loss of coolant, or a broken fan belt, shut the engine off immediately.

NOTICE

Most engines have an automatic low oil pressure shut down device, but some engines do not. Expensive damage may occur if the engine oil level and condition is not checked daily. Follow all maintenance procedures specified by the engine manufacturer's manual. Check the fuel level daily, running out and repriming is time consuming. Do not over fill the tank, there must be expansion space in the top of the tank. Inspect hoses, fittings, lines, tanks, etc. for any oil, fuel, engine coolant, etc. leaks daily. Repair or replace any damaged or leaking components.

TYPICAL DIESEL ENGINES

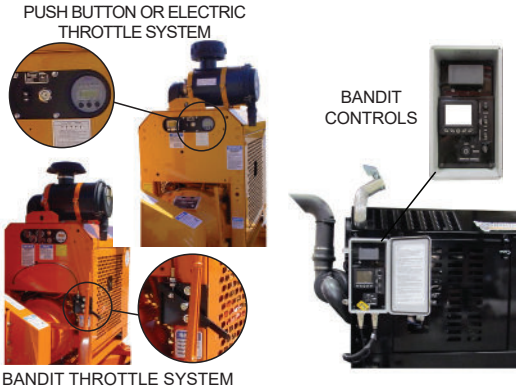

TYPICAL GASOLINE ENGINES

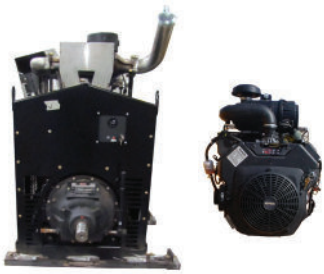

TRANSPORTATION PROCEDURES

⚠WARNING

BEFORE TRANSPORTING THE MACHINE THE FOLLOWING MUST BE COMPLETED.

1. Idle engine, disengage clutch.
2. Make sure the top feedwheel is in the lowered position.
3. Place all hydraulic controls in the “off” position.
4. Turn off engine, wait for the chipper disc/drum to come to a complete stop and you must have the ignition key in your possession.
5. Remove all excess debris. Remove any wood or debris which may have collected.
6. Return wooden push paddle to the mount and secure for transportation. Store all tools in the tool box and make sure all boxes and cabinets are closed and secured.
7. If equipped, close the folding infeed tray for the infeed hopper and make sure the spring latches are locked into place.
8. Raise the front of the machine or transport trailer with the tongue jack and remove the stabilization blocks used. If the machine is equipped with a hydraulic tongue jack, remove the lock pin before raising the front of the machine.
9. Couple machine or transport trailer to transport vehicle by lowering the machine onto the hitch. Make sure the hitch matches the coupling size. Then secure hitch and lock it.
10. Place the tongue jack in the transport position. If the machine is equipped with a hydraulic tongue jack, lift the foot pad to the transport position and install the lock pin.
11. Attach the safety chains by crossing them under hitch, make sure to allow the proper amount of slack in chains to avoid binding or dragging the ground when making turns.
12. Connect the brake breakaway cable (if equipped) and plug in the electrical connection for the lights on the machine or transport trailer.
13. Check running lights, turn signals, and brake lights. All must be operating properly before transporting the machine. Also check brakes (if equipped) to make sure they are operating correctly.
14. Do not transport unless discharge is secured into a transport position.
15. If machine is equipped with a chip box, lock the turntable in the transport position.
16. Check tires for correct pressure, cuts or damaged rims.
17. Check lug nuts and retorque if necessary. Check new units before operation, check again after 20-25 miles (32-40 km) and regularly check at least weekly.
18. Inspect and replace any axle dust caps that are damaged or leaking.
19. Check wheel bearings and grease or oil axles per axle manufacturer’s manual.
20. Walk around the machine to confirm that everything is secure and that there is not anything loose that could fall off during transport. Look under machine to ensure nothing is dragging. Look down both sides of the machine for anything sticking out that may become damaged during transport.
21. If machine is equipped with a vise, make sure to secure in place and clamp jaws closed.
22. Close and secure any of the following, if equipped: engine cowl doors and side panels, radiator debris screens, inspection doors, housing covers, tanks caps and covers, etc.
23. If the machine is self propelled and on a transport trailer, make sure the trailer has the correct load capacity, the machine is positioned on the trailer for correct weight distribution, and the machine is securely bound down to the trailer bed per your States and Federal binding requirements. Make sure the loading ramps are securely stored for transport. (See Loading & Unloading Self-Propelled Machines.)
24. The machine is now ready for transport. Make sure to obey all local regulations and laws regarding the transporting of this type of machine.
25. Do not drive too fast for road conditions or exceed speed regulations for equipment towing. Machine must be hauled level and the towing vehicle must be sized to handle hitch weight, towing weight, and braking requirements.

LOADING & UNLOADING SELF-PROPELLED MACHINES

⚠WARNING

BEFORE ATTEMPTING TO USE A TRAILER FOR TRANSPORT, MAKE SURE THE TRAILER TOWING VEHICLE IS APPROPRIATE FOR THE TASK.

1. The trailer must have a cargo weight rating capacity for the weight of the machine. The combined weight of the trailer and the machine can not exceed the load capacity of the tires, axles, hitch coupler system or the GVWR (Gross Vehicle Weight Rating) of the trailer.
2. The trailer must have a lighting system and a braking system to match and perform correctly off the towing vehicle's system. You must meet the Federal and your States' Department of Transportation Code of Regulations concerning lights, brakes, and highway transit.
3. The towing vehicle must have the hauling and hitch capacity ratings for the trailer and machine combination. The towing vehicle must be mechanically sound and capable of handling the towing job.
4. The trailer must be constructed with appropriate chain down positions for the specific sized machine. You must have binders that will withstand the strain of the machine trying to move while it is being transported.
5. When the machine is positioned on the trailer bed, the trailer must have the right load capacity with the machine positioned on the trailer for the correct weight distribution (follow the manufacturer's recommendations for the amount of weight on the tongue or hitch according to the total machine and trailer weight)
6. The loading ramps or loading gate of the trailer must be constructed to withstand the weight and forces involved in loading and unloading the machine.

⚠WARNING

BEFORE LOADING OR UNLOADING THE MACHINE, INSPECT AND CONFIRM THE FOLLOWING STEPS: When loading or unloading the self-propelled machine on the trailer, use care and caution. The maneuvering of the equipment must be slow, smooth, and intentional, not fast and jerky.

1. Make sure the trailer and towing vehicle are parked on a flat surface. They must be stable on the surface with the brakes locked and/or the wheels chocked to avoid unwanted movement.
2. Position the loading ramps or loading gate securely between the trailer and the ground level. Have them located so that they are in line with the tires or tracks of the machine when it moves.
3. Remove and store the chains and binders used for transporting.
4. Confirm that there are not any obstacles on the trailer bed, around the trailer that may cause restricted movement of the machine or the operator.
5. The only person in the area should be the one that is operating the machine controls, and he/she should be very experienced with the controls on this machine.
6. If you are on streets, roads or public areas, position the warning cones etc, per your company's safety policy.
7. Follow all pre-startup instructions for the machine.
8. Typically, the engine end of the machine should be positioned so that it is toward the tongue of the trailer, during transport.
9. Align the machine with the trailer bed, and the loading ramps. The only equipment movement should be slowly, straight on or straight off the trailer.
10. With the engine and the machine at as low a speed as possible, move the machine toward the ramp system. Make sure the alignment is correct throughout the travel.
11. Properly secure the equipment and the area to avoid any possible accidents or dangers.

MACHINE ORIENTATION REFERENCE

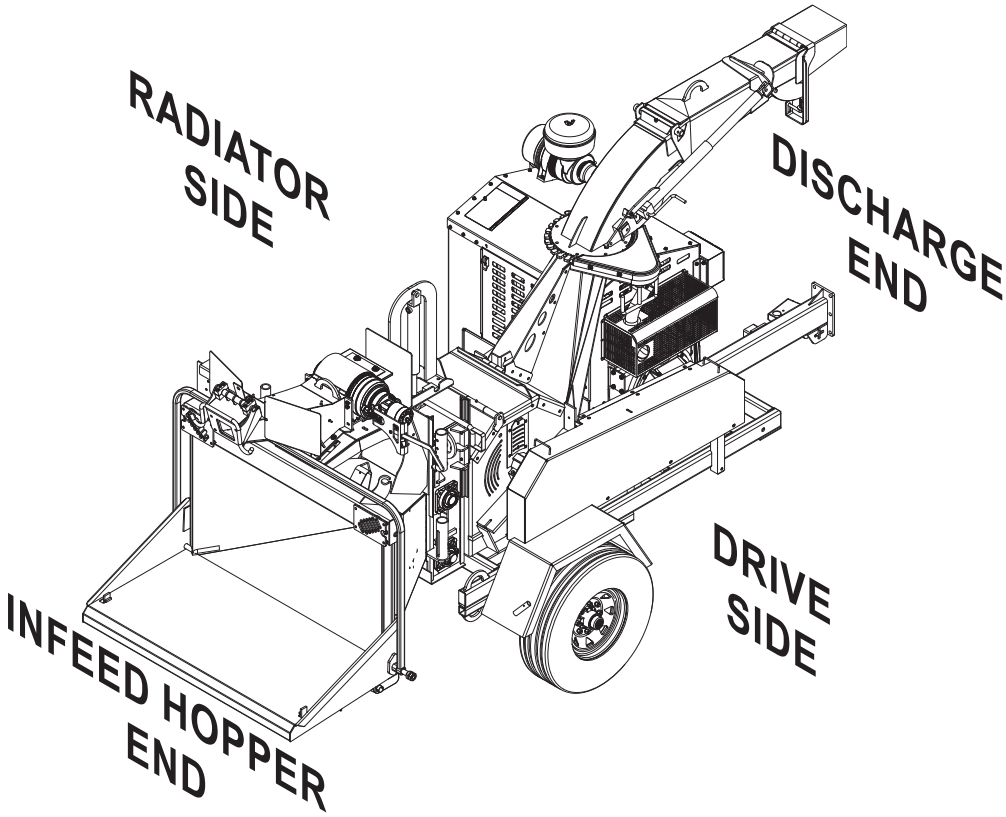

MAINTENANCE

The Bandit is a very simple machine to maintain. If you will follow a regular scheduled preventative maintenance program, you should have years of trouble free operation.

⚠DANGER

Before attempting any type of maintenance, disengage clutch, wait for the disc/drum to come to a complete stop, turn off engine, remove the ignition key, make sure the ignition key is in your possession, install the disc/drum lock pin, and disconnect the battery.

⚠DANGER

Do not let anyone operate or maintain this machine until they have thoroughly read this manual, reviewed the equipment decals, watched the equipment video, and has been properly trained. You can purchase additional Bandit manuals, decals and videos for a nominal fee.

NOTICE

Consult your engine manual for proper break-in procedures. Various engines require somewhat different procedures, but basically the engines need to operate at lower R.P.M.'s and loads for a specific time.

NOTICE

Failure to properly break-in your engine may result in poor bearing and piston ring surfaces.

NOTICE

The Bandit has only been run for a short time to test proper hydraulic pressures, possible leaks, etc. The fuel tank will be empty. Fuel is provided through a small auxiliary tank for testing. This immensely helps maintain safety in our manufacturing facility and while shipping.

NOTICE

Expensive damage to the Bandit will occur if proper preparation is not taken before welding on the machine. Be sure to disconnect both battery cables and the engine ECM (engine control module) before welding. Follow the specific Engine MFG. instructions for proper welding and grounding procedures, before attempting to weld on the machine. If welding on the machine, do not ground the welder through the machine bearings, ground near work to be performed.

DAILY START UP & MAINTENANCE

1. Check the safety decals and engine gauges:
Replace any missing or damaged decals and/or engine gauges.

2. Check all safety equipment:
Check for proper operation. Repair or replace as needed. With everything shut down and stopped, ensure last chance cables freely operate feed control valve.

3. Check entire machine for loose bolts, nuts, parts, or components:
Check entire machine for any loose parts or components. Check for loose nuts or bolts. Torque, tighten, or replace any of the loose components. See page 50 for specific bolt torques.

4. Check all guards:
Check to make sure all guards are in place and installed correctly. Make sure they are secure.

5. Check chipper hood hinge:
Make sure the hood hinge operates correctly, and is lubricated. Must replace hinge if damaged.

6. Checking for foreign objects:
Before opening the hood make sure the clutch is disengaged, the engine off, the disc/drum lock pin is installed, battery is disconnected, and also make sure the ignition key is in your possession. Remove the hood pin padlock, disconnect the chipper hood engine disable plug, suppress the spring lock for hood pin on disc chippers, and then remove the hood lock pin. Look for any foreign objects inside the chipper housing or in the knife pockets of the disc/drum. Remove any foreign objects found.

7. Check chipper drum assembly:
Check the condition of knife holder threads, secure welds, torqued bolts, excessive wear and impact cracks. If a problem is found contact the chipper manufacturer or an authorized Bandit dealer. Also check the chipper housing at this time. Check the chipper base, belly band, and hoods for wear or damage. Also inspect the chipper bearings.

DAILY START UP & MAINTENANCE (cont.)

8. Check chipper disc/drum to turn:
Very carefully, manually with a pry bar or wood bar, turn the chipper disc/drum a full revolution. This is to ensure the anvil and knives have proper clearance. If the chipper disc/drum is jammed with debris or frozen in place, DO NOT attempt to start the engine and engage clutch until the chipper disc/drum rotates freely.

9. Check the condition of the fan blades, knives, anvil, and attaching hardware:
Sharpen, file, or replace the knives to keep them sharp. Check the fan blades, anvil, and attaching hardware for the knives and anvil. Replace if necessary.

10. Properly torque the knife mounting hardware:
All knife mounting hardware must be factory approved. Knife mounting hardware must be replaced after maximum of 4-5 knife rotations/changes to ensure safe clamping ability.

Torque set, AT ALL TIMES to: 180 ft.-lbs. (245 Nm)

11. Hood lock pin and padlock:
After closing chipper hood, reinsert the hood pin and padlock, make sure pin is tight and secure. If worn replace immediately. Don't use a worn or makeshift hood pin. Make sure the spring lock for the hood pin is in the correct position on disc chippers. Make sure the chipper hood engine disable plug is installed correctly and that it is also operating properly.

12. Grease all feedwheel and chipper bearings daily:
Use an EP-2 Lithium type grease only for all bearings. Purge chipper bearings with grease. You can not over grease these bearings. Grease feedwheel bearings with one shot of grease. Both types of bearings are designed with a relief system that will not allow over greasing. In other words, you can not hurt the bearing seals by pumping in too much grease. Most of the failures related to bearings are diagnosed as "Contamination". Contamination is caused by improper lubrication. Wipe off excess grease. **Excessive grease will attract dirt.**

13. Check and oil feedwheel slide box:
Check that the feedwheel slide box is working smoothly and oil with 10W/30 type motor oil. Clean and oil the slide guides. After pinning, chaining, and blocking the top yoke in the up position, clean and oil each side of the bottom yoke. New machines, especially, need oiling to ensure correct operation during break-in.

14. Check / adjust the chipper drive belt tension:
Inspect belt condition and replace if needed. The belts will need to be tightened several times in the first 2 to 48 hours of operation. A loose belt will slip and then glaze over. Once they slip you must replace them. Check hydraulic pump drive belts also if equipped. See pages 66 - 67 for procedures.

15. Check the hydraulic pump and motor shafts:
Check the hydraulic pump and hydraulic motor shafts for fit and tightness.

16. Check hydraulic oil level:
The hydraulic oil reservoir tank level should always remain at 3/4 to 7/8 full. Remember to check DAILY to avoid excessive heat build up.

17. Check for any fluid leaks:
Inspect for any oil, fuel, hydraulic oil, or engine coolant leaks. Check all hoses, fittings, lines, and tanks. DO NOT use fingers or skin to check for hydraulic leaks. Repair or replace any damaged or leaking components.

18. Check hydraulic control valves:
Inspect all hydraulic control valves and ensure they operate smoothly and shift correctly.

19. Check the fuel level:
Check the fuel level, running out and repriming is time consuming. Do not over fill, and you must leave fuel expansion space in the top of the tank: 2" (50 mm) from the top for diesel engines and 1/2" (12.7 mm) from the top for gasoline engines.

20. Check engine oil and coolant level:
Follow the engine manufacturer manual recommendations for fluid levels. You MUST follow specific ENGINE MFG. manual recommendations for radiator coolant, additives, lubrication, correct engine speed, ETC.

21. Check DEF level on Tier 4 engines:
Check the Diesel Emissions Fluid (DEF) level on Tier 4 engines. Fill to engine manufacturer's manual recommendations.

22. Check radiator, debris screen:
Refer to the engine manufacturer's manual. Thoroughly clean radiator fins at least once a day or more in excessive conditions. Make sure debris is not packed between fins. Use compressed air and/or pressurized water (soap may also be needed) to clean the radiator, depending on the level and type of debris. If pressurized water is used, be careful not to turn the debris hard and pack solid between the radiator fins. Make sure to clean the radiator in the correct direction depending on if the cooling fan is a sucker or a pusher; do not propel the debris into the radiator with compressed air or pressurized water. A partially plugged radiator will not allow the engine to cool properly. Keep the compressed air or pressurized water a safe distance from the radiator fins and parallel to the fins so they are not damaged. Visually inspect the radiator fins and make sure they are not bent or closed off, repair or replace as needed. Clean cooling fan, shroud on air cooled engines, and the debris screen (if so equipped). Improper service, maintenance, or neglect will cause overheating problems and/or engine failure.

DAILY START UP & MAINTENANCE (cont.)

23. Check oil cooler (if equipped):
Thoroughly clean cooler fins at least once a day or more in excessive conditions. Make sure debris is not packed between fins. Use compressed air and/or pressurized water (soap may also be needed) to clean the oil cooler, depending on the level and type of debris. If pressurized water is used, be careful not to turn the debris hard and pack solid between the cooler fins. Make sure to clean the cooler in the correct direction; do not propel the debris into the cooler with compressed air or pressurized water. Keep the compressed air or pressurized water a safe distance from the cooler fins and parallel to the fins so they are not damaged. Visually inspect the cooler fins and make sure they are not bent or closed off, repair or replace as needed.

24. Check air cleaner and precleaner:
Clean or replace element following engine manual recommendations. Also, check and clean the vacuator valve.

25. Check clutch:
Check for proper lubrication, and engagement tension adjustment, frequently adjust and lubricate per PTO clutch manufacturer's manual. Bandit Industries, Inc. **does not warranty clutch failures.**

26. Sliding tongue & hardware (if equipped):
Inspect sliding tongue and hardware for wear or damage. If worn or damaged, replace immediately. Make sure the sliding tongue bolts and automated lock nuts are snugged up to the tongue bushings, but still able to spin inside the bushings. Do not torque.

27. Check tires:
Check tires for wear, air pressure, weather checking and damage. Replace if damaged. Fill each tire to rated capacity on tire.

28. Inspect axle dust caps:
Inspect axle dust caps and replace if damaged or leaking.

29. Inspect, adjust, and lubricate tracks (if equipped):
Inspect, adjust, and lubricate tracks as needed per track MFG. manual.

30. Check the infeed hopper:
Check in the infeed hopper for any foreign objects and around the entire machine for tools, cans, saws, etc. All tools not in use should be stored in a tool box.

31. Block the tires, tongue, and infeed hopper:
Before operation block the tires, tongue, and infeed hopper for stability. Do not rely on tongue jack for operational stabilization.

32. Check the discharge direction:
Remove transport bolt and nut, then make sure the discharge is pointed in a safe direction and locked into place.

33. Review all safety procedures on decals, from manual, and from video.

34. Make sure all safety equipment is being worn:
Make sure you are wearing all of your safety equipment: hard hat, face shield, gloves, eye protection, ear protection, etc. per ANSI and OSHA standards.

35. Remember to check EVERYTHING on the checklist.

WEEKLY MAINTENANCE

1. Check anvil clearance, tightness, and wear:
Measure the anvil clearance. The clearance should be .120" (3.0 mm) from highest knife. Check the anvil hardware, make sure the bolts are at the proper torque. The anvil is a normal wear item, if it is worn you can rotate it to a new working edge. Refer to pages 58 - 59 for the exact checking of anvil clearance procedure.

2. Check shear bar clearance, sharpness, and tightness:
Every 50 hours of operation, measure the shear bar clearance. The clearance should be .120" (3.0mm) from highest knife. Make sure the shear counter knives are sharp and have not lost their edge every 50 hours of operation. File, grind, or replace as needed. A maximum of 1/8" (3.1 mm) can be ground or filed off the shear counter knives. Check the shear bar hardware, make sure the bolts are at the proper torque. There is a shear bar on each side of the chipper drum. Refer to pages 62 - 63 for the exact checking of shear bar clearance procedure.

3. Check alternator and fan belts on engine:
Inspect belt condition and replace as needed. As applicable adjust and maintain per the engine manufacturer's manual.

4. Check spring tension on feed system:
Do not over tighten. Keep tight for small diameter material and progressively looser for larger diameter material. See page 76.

5. Check wheel lug nuts:
Keep lug nuts tight, retorque, replace if needed.

6. Lubricate all steel friction areas:
Lubricate all steel friction areas including, but not limited to pivoting, hinged, sliding, rotating areas on the machine (i.e. control bar, folding tray, discharge flipper, hyd. valves & linkages, height adjustable discharge, discharge T-handle, hydraulic bump bar, etc.)

7. Lubricate chain driven components:
Use a dry lube on any chain driven components: hydraulic swivel discharge and chain driven feedwheels.

MONTHLY MAINTENANCE

1. Check towing hitch:
Check for excessive damage or wear. Replace if needed. Keep pintle ring greased to reduce wear.

2. Check discharge and infeed hopper wear:
Check for wear on discharge, infeed hopper, and discharge direction adjustor; build up, repair or replace as needed.

3. Inspect feedwheel motor connections:
Check and maintain correct torque, on feedwheel motor connections. See page 66.

4. Check feedwheel teeth for sharpness:
Replace if needed.

5. Check chipper bearings and chipper sheave:
Check, retighten all bearing bolts, bearing lock collars, and also belt sheave bushings to correct torques.

6. Check hydraulic function pressures:
Check, reset and maintain all hydraulic function pressure settings to a maximum of the specified PSI (bar). This will give you the best performance from the hydraulic system.

7. Check wheel bearings:
Check and grease or oil wheel bearings per axle manufacturer's instructions.

8. Check and adjust brakes:
Check and adjust brakes as needed per axle MFG. manual.

9. Check discharge chain tension (if equipped):
Check tension on hydraulic or hand crank swivel discharge chain drive and tighten as necessary. Chain tension is 1/4" (6 mm) per foot (0.3 m) of center distance between sprockets, NOT to exceed a 1/2" (13 mm) of deflection. Do not overtighten, which may result in hydraulic motor failure.

10. Lubricate "Bandit" lever throttle cable:
If the machine is equipped with a "Bandit" lever throttle system, lubricate inner throttle cable and cable ends with a cable lube or SAE 10W/30 oil. Replace throttle cable if it doesn't operate smoothly.

3 MONTH MAINTENANCE

1. Hydraulic oil filter(s):
Must be replaced after FIRST 10 HOURS OF OPERATION, USE A 10 MICRON FILTER. After first change replace oil filter every 3 months or 400 hours.

2. Grease discharge swivel plates:
Grease swivel plates for discharge as needed.

3. High pressure oil filter(s) (if equipped):
Must be replaced after FIRST 10 HOURS OF OPERATION. After first change replace oil filter every 3 months or 400 hours.

YEARLY MAINTENANCE

1. Hydraulic oil:
Change hydraulic oil and flush the hydraulic reservoir tank.

2. Hydraulic suction screen(s):
Change hydraulic suction screen(s) yearly or every 2000 hours.

3. Fuel tank:
Drain and clean the fuel tank yearly.

DAILY START UP & MAINTENANCE CHECK LIST

Each day before starting your machine these checks must be made:

		OK	REPAIRED
1.	Check the safety decals and engine gauges, replace if damaged.	☐	☐
2.	Check, maintain, and service all safety equipment for proper operation: "Last Chance Stop" system, engine disable plug, control bar, hood pin, spring lock for hood pin (disc chippers only), pusher tool, etc.	☐	☐
3.	Check entire machine for loose nuts, bolts, and components.	☐	☐
4.	Check all guards to make sure they are tight and securely in place.	☐	☐
5.	Make sure hood hinge operates correctly, is not damaged, and is lubricated.	☐	☐
6.	Open chipper hood and check for any foreign objects in chipper housing or knife pockets.	☐	☐
7.	Check the condition of chipper disc/drum assembly.	☐	☐
8.	Carefully rotate the chipper disc/drum with a pry bar or wood bar to ensure proper anvil clearance. If chipper disc/drum is jammed with debris or frozen in place, do not attempt to start engine and engage clutch until chipper disc/drum rotates freely.	☐	☐
9.	Check the condition of the fan blades, knives, anvil, and attaching hardware.	☐	☐
10.	Properly torque knife mounting hardware.	☐	☐
11.	After closing chipper hood, reinsert the hood pin and padlock, make sure the hood pin is tight and secure. Make sure the hood lock pin is firmly in place, the spring lock for hood pin springs back into position on disc chippers, and the chipper hood engine disable plug is installed correctly.	☐	☐
12.	Grease chipper bearings (purge) and feedwheel bearings (1 shot) daily.	☐	☐
13.	Check the feedwheel slide box is working smoothly, clean, and oil.	☐	☐
14.	Check belt tension on chipper and hydraulic pump belt drives; adjust/replace as necessary.	☐	☐
15.	Check hydraulic pump and motor shafts for fit and tightness.	☐	☐
16.	Check and always maintain hydraulic level at 3/4 to 7/8 full.	☐	☐
17.	Check all hoses, fittings, lines, and tanks for damage and fluid leaks.	☐	☐
18.	Check hydraulic control valves and ensure they operate and shift correctly.	☐	☐
19.	Check fuel level. (Running out and repriming is time consuming).	☐	☐
20.	Check engine oil, coolant levels, and correct engine speed. Follow ENGINE MANUFACTURER'S manual specs.	☐	☐
21.	Check DEF level on Tier 4 engines. Fill to ENGINE MANUFACTURER'S manual recommendations.	☐	☐
22.	Check radiator and debris screen. Clean as necessary. Clean cooling fan and shroud on air cooled engines.	☐	☐
23.	Check oil cooler (if equipped). Clean as necessary.	☐	☐
24.	Check air cleaner, precleaner, and vacuator valve. Clean or replace as necessary.	☐	☐
25.	Check clutch for proper engagement tension and lubrication, frequently adjust and grease per PTO manufacturer's manual recommendations.	☐	☐
26.	Inspect sliding tongue & hardware (if equipped) for wear or damage and make sure the hardware is snug tight. Do not torque. Allow them to spin freely.	☐	☐
27.	Check condition of the tires. Fill as needed.	☐	☐
28.	Inspect and replace any axle dust caps that are damaged or leaking.	☐	☐
29.	Inspect, adjust, and lubricate tracks per manufacturer's manual recommendations (if equipped).	☐	☐
30.	Check infeed hopper and around the entire machine for any foreign objects, tools, cans, saws, etc.	☐	☐
31.	Block tires, tongue, and infeed hopper for stability before operation. Do not rely on tongue jack.	☐	☐
32.	Remove transport bolt and nut, then make sure discharge is pointed in safe direction and locked into direction.	☐	☐
33.	Review all safety procedures on decals, from manual, and from video.	☐	☐
34.	Wear all applicable safety equipment: hard hat, face shield, gloves, eye protection, ear protection, etc.	☐	☐
35.	Remember to check EVERYTHING on the checklist.	☐	☐

WEEKLY CHECK LIST

Every week these checks must be made:

		OK	REPAIRED
1.	**Check anvil clearance, tightness, and wear.**	☐	☐
2.	**Check shear bar clearance, sharpness, and tightness every 50 hours of operation.**	☐	☐
3.	**Check alternator and fan belts on engine, adjust or replace.**	☐	☐
4.	**Check spring tension on easy climb feed system.**	☐	☐
5.	**Check and retorque wheel lug nuts.**		
6.	**Lubricate steel friction areas: pivoting, hinged, sliding, & rotating areas (i.e. control bar, folding tray, discharge flipper, hyd. valves & linkages, hyd. bump bar, etc).**	☐	☐
7.	**Use a dry lube on any chain driven component.**	☐	☐

MONTHLY CHECK LIST

Every month these checks must be made:

		OK	REPAIRED
1.	**Check towing hitch for wear, keep pintle ring greased.**	☐	☐
2.	**Check discharge, and infeed hopper for wear.**	☐	☐
3.	**Inspect feedwheel motor connection.**	☐	☐
4.	**Check feedwheel teeth for sharpness.**	☐	☐
5.	**Check bearing bolts and lock collars and torque chipper sheave bolts.**	☐	☐
6.	**Check hydraulic function pressures. Set to specified PSI (bar).**	☐	☐
7.	**Check and grease or oil wheel bearings, follow axle MFG. instructions.**	☐	☐
8.	**Check and adjust brakes, follow axle MFG. instructions.**	☐	☐
9.	**Check and adjust discharge chain tension (if equipped).**	☐	☐
10.	**Lubricate “Bandit” lever throttle cable (if equipped).**	☐	☐

3 MONTH CHECK LIST

Every three months these checks must be made:

		OK	REPAIRED
1.	**Replace hydraulic filter(s) after first 10 hours then quarterly or every 400 hours.**	☐	☐
2.	**Grease swivel plates for discharge as needed.**		
3.	**Replace high pressure oil filter(s) (if equipped) after first 10 hours then quarterly or every 400 hours.**	☐	☐

YEARLY CHECK LIST

Every year these checks must be made:

		OK	REPAIRED
1.	**Change hydraulic oil and flush the hydraulic tank.**	☐	☐
2.	**Replace hydraulic suction screen(s) annually or every 2000 hours.**	☐	☐
3.	**Drain and clean the fuel tank.**	☐	☐

⚠ WARNING

CHECK CHIPPER DRUM ASSEMBLY FOR THE CONDITION OF KNIFE HOLDER THREADS, SECURE WELDS, TORQUED BOLTS, EXCESSIVE WEAR AND IMPACT CRACKS. IF A PROBLEM IS FOUND CONTACT CHIPPER MANUFACTURER OR AN AUTHORIZED CHIPPER DEALER.
ALSO CHECK THE CHIPPER HOUSING AT THIS TIME. CHECK BELLY BAND, BASE, AND HOODS FOR WEAR AND DAMAGE. ALSO INSPECT THE CHIPPER BEARINGS.

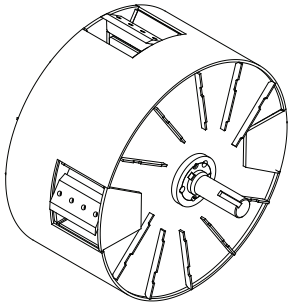

BOLT TORQUE CHART

(THESE TORQUES ARE BASED ON DRY, CLEAN THREADS)

DESCRIPTION	BOLT SIZE	TORQUE(FT.-LBS.)	TORQUE (Nm)
Chipper Drum Bearing Bolts	5/8” - 11 NC	220	298
Drum Head Shaft Bushing “4040”	5/8” - 11 NC	142	193
Anvil	1/2” - 13 NC	75	102
Knife Bolts	5/8” - 11 NC	180	245
Rope/Line Shear Counter Knife Bolts	1/4” - 20 NC	15	20
Rope/Line Shear Adjustment Bolts	5/8” - 11 NC	180	245
Feedwheel Bearing Bolts	1/2” - 13 NC	75	102
Feedwheel Bearing Set Screws	3/8” - 24 NF	20	27
Grip-Tight Feedwheel Bearing Set Screws		2	3
“RE/TG” Hydraulic Feedwheel Motor Shaft Nut	1” - 20 NEF	250 - 300	339 - 407
Taperlock Keyless Feedwheel Coupler	M10 x 1.50	55	74
Engine Hold Downs	1/2” - 13 NC	60	81
Engine Hold Downs	5/8” - 11 NC	125	169
Engine Sheave Bushing “SF”	3/8” - 16 NC	30	41
Engine Sheave Bushing “E”	1/2” - 13 NC	60	81
Chipper Sheave Bushing “E”	1/2” - 13 NC	60	81
Chipper Sheave Bushing “F”	9/16” - 12 NC	75	102
Autofeed Cartridge Nut		4 - 6	5 - 8
Autofeed Plus Solenoid Retainer Nut		4 - 6	5 - 8
Hitch Mount Bolts	5/8” - 11 NC	220	298

Before tightening bolts be sure you have the correct size bolt for the correct amount of torque.
Use only factory approved knives and hardware.

BASIC WHEEL TORQUE REQUIREMENTS (per mfg.)

KEEP LUG NUTS PROPERLY TIGHTENED, CHECK NEW UNIT BEFORE OPERATION, CHECK AGAIN AFTER 20-25 MILES (32-40 km) AND REGULARLY CHECK AT LEAST WEEKLY.

5 & 6 Lug Hubs (1/2” - 20 Studs) .....90 - 120 ft.-lbs. Torque (122 - 163 Nm)
8 Lug Hubs (1/2” - 20 Studs) .....90 - 120 ft.-lbs. Torque (122 - 163 Nm)
8 Lug Hubs (9/16” - 18 Studs) .....110 - 120 ft.-lbs. Torque (149 - 163 Nm)
8 Lug Hubs (5/8” - 18 Studs) .....190 - 210 ft.-lbs. Torque (258 - 285 Nm) (Cone Nut)
8 Lug Hubs (5/8” - 18 Studs) .....275 - 325 ft.-lbs. Torque (373 - 441 Nm) (Flange Nut)
8 Lug Hubs (22mm x 1.5 Studs) .....450 - 500 ft.-lbs. Torque (610 - 678 Nm) (Flange Nut)
10 Lug Hubs (3/4” - 16 Studs) .....450 - 500 ft.-lbs. Torque (610 - 678 Nm)

(Consult axle manufacturers manual shipped with each machine for specific axle-stud-wheel combination lug nut torques.)

WARNING

WEAR EYE & PERSONAL PROTECTION EQUIPMENT

Wear all personal protection equipment and follow all safety standards per ANSI and OSHA instructions.

PAINT CARE

To help keep up the appearance of your Bandit equipment and reduce the possibility of surface rust follow these steps:

1. The machine should be washed on a regular basis with a non-abrasive mild detergent and then rinsed thoroughly. **Do not pressure wash sensitive areas** like: decals, gauges, electronic devices, autofeed control, etc.
2. If a stone chip, paint scratch, or paint crack occurs - it should be repaired immediately. Simply sand the edges of the damaged paint area, mask off the surrounding area, and apply primer and paint to the dry, clean, and warm area. This will keep the damaged area from spreading or getting worse.
3. If you are unable to sand and mask the area, there are containers of primer and paint available. A small brush can be used to touch up the area.
4. Also, primer and most colors of paint are available in aerosol spray cans to simply spray over the effected area after it is cleaned, dry, and warmed. This method is not as reliable as the process in step #2.

It is also reported that some equipment owners polish their machine at least yearly, and keep good mud flaps on their towing trucks.

⚠ DANGER

LOCKOUT ALL ENERGY SOURCES BEFORE SERVICING OR REMOVING GUARDS OR HOODS!

1. **Shut off engine/motor. Key in possession.**
2. **Disengage pto/clutch.**
3. **Wait for cutter disc/drum to come to a COMPLETE STOP (takes at least several minutes).**
4. **Install disc/drum lock pin.**
5. **Loader arm (if equipped) securely on ground and hydraulic pressure released.**

6. **Unplug engine disable plug-in.**
7. **Remove padlock from hood pin.**
8. **Press down and hold hood spring lock pin (on disc chippers).**
9. **Retract hood pin.**

DO NOT RESTART UNTIL ALL GUARDS AND HOODS ARE SECURELY AND PROPERLY INSTALLED.

TOP 10 CHIPPER MAINTENANCE ITEMS

Maintenance, along with proper operation, is the most important thing you can do to get the optimum production and life out of the chipper. Failure to follow proper maintenance procedures will affect chipper life and void warranty!

⚠DANGER

Before attempting any type of maintenance disengage clutch, turn off engine, wait for the disc/drum to come to a complete stop, install the disc/drum lock pin, disconnect battery, and make sure the ignition key is in your possession.

MAINTENANCE ITEM	WHAT TO CHECK	RESULTS
1. Knives & Anvil	1. Sharp knives - Bandit approved new knives or professionally sharpened 2. Proper knife width and angle 3. Properly torque the knife mounting hardware. 4. Bandit approved knife mounting hardware, must be replaced after 4 - 5 knife rotations/changes to ensure safe clamping ability 5. Correct anvil to knife clearance. 6. Anvil's working edge is not rounded off or chipped up. 7. Anvil hardware properly torqued.	1. Proper sharpening procedures will pay dividends! Maintaining your chipper knives will reduce fuel consumption and increase the life of your chipper. 2. Operating your chipper with dull knives increases the amount of power required to chip, increases machine vibration and cause feeding problems. The extra vibration will cause cracks to develop throughout the machine and **void warranty**.
2. Belt Drives	1. Belts must be tightened several times in the first few days of operation. 2. Proper belt tension. 3. Proper belt alignment.	1. Loose and slipping belts will affect the performance of feeding. Burnt, glazed, and broke belts due to improper adjustments **will not be covered under warranty**.
3. Clutch	1. Adjust the clutch several times in the break-in period per the manufacturer's manual. 2. DO NOT engage/disengage the clutch at high rpm. 3. Do Not use the clutch to dislodge a jam.	1. If not adjusted correctly, the clutch will slip under a load causing feeding problems. Burnt and glazed clutches **will not be covered under warranty**.
4. Lubrication	1. All bearings, pivots points, hinges, chains, etc. need to be greased or oiled per the manual. 2. The feed system slide box must be oiled to ensure proper operation, DO NOT grease.	1. Improper lubrication will cause failure, premature wear, or binding, which **will not be covered under warranty**.
5. Engine Maintenance	1. All filters, radiator screens, radiator, coolant level, water separators, oil, etc. must be checked, serviced, and changed per the engine manufacturer's manual.	1. Not following these maintenance items will cause overheating, poor performance, and could cause possible engine damage that **will not be covered under warranty**.

TOP 10 CHIPPER MAINTENANCE ITEMS cont.

MAINTENANCE ITEM	WHAT TO CHECK	RESULTS
6. Engine Radiators & Screens	1. Clean the radiator with compressed air and/or pressurized water (soap may also be needed) to clean the radiator, depending on the level and type of debris. If pressurized water is used, be careful not to turn the debris hard and pack solid between the radiator fins.	1. Not following these maintenance items will cause overheating, poor performance, and could cause possible engine damage that **will not be covered under warranty**.
7. Chipper Hood Engine Disable Plug	1. If the engine does not start, check that the Engine Disable Plug is installed correctly. 2. The terminals on the Engine Disable Plug socket may need to be spread to get a good connection and/or also check for corrosion on the terminals.	1. Engine will not start or will not stay running and will have down time for repairs.
8. Hydraulic System	1. Maintain the hydraulic tank level at 3/4 to 7/8 full. 2. Change hydraulic filters per owners manual. 3. Check hydraulic function pressures per owners manual. 4. Start with simple checks if the feed system is not working properly. Look at any dump cartridges or solenoids on the hydraulic system, often tapping of the block or removing the cartridge and cleaning it will take care of problems.	1. Poor performance and will have down time for repairs.
9. Feed System Slide Box	1. Open the bottom feedwheel clean-out door and clean any debris to make sure no binding occurs. 2. Adjust the yoke springs to the size of the wood. 3. The feed system slide box must be oiled to ensure proper operation, DO NOT grease.	1. Bottom feedwheel binding up and possible down time for repairs. 2. Too much pressure from the yoke springs will not allow the wood to feed properly. Too little pressure will allow the feedwheels to spin on the wood. 3. The slide box may bind up causing down time for repairs.
10. Autofeed	1. Make sure the engine RPM returns to original RPM, if not the autofeed will not allow the feedwheels to run. 2. Make sure the cartridges and valves in the hydraulic system are functioning properly. See if they are stuck or full of debris 3. Refer to the autofeed manual for troubleshooting and the owners manual for additional troubleshooting and information on settings.	1. May let the engine stall out when feeding wood, the chipper could plug with wood chips causing down time for unplugging. 2. Belts may slip and glaze over that **will not be covered under warranty**.

LUBRICATION CHART

		CHECK			
#	DESCRIPTION	DAY	WEEK	MONTH	PROCEDURE
1	Chipper Bearings	X			Purge - wipe off excess
2	Feedwheel Bearings	X			1 shot of grease - wipe off excess
3	Hood Hinge	X			1 - 2 shots of grease - wipe off excess
4	Feedwheel Slide Box	X			Clean and oil with 10W/30
5	Steel Friction Areas: pivoting, hinged, sliding, rolling		X		Lubricate (i.e. control bar, discharge flipper, folding tray, winch rollers, etc.)
6	Chain Driven Components		X		Dry lube (swivel discharge, chain driven feedwheels, etc.)
7	Pintle Eye Ring			X	Grease to reduce wear
8	Bandit Throttle Cable			X	Lubricate inner cable & ends SAE 10W/30
9	Discharge Swivel Plates			3 Months	Grease as needed
10	Clutch	→			Grease per MFG's instructions
11	Wheel Bearings - if equipped	→			Grease or oil per MFG's instructions
12	Tracks - if equipped	→			Grease per MFG's instructions

A right angle grease fitting may need to be used to grease some of the lubrication points. This type of grease fitting can be obtained from most local automotive parts stores.

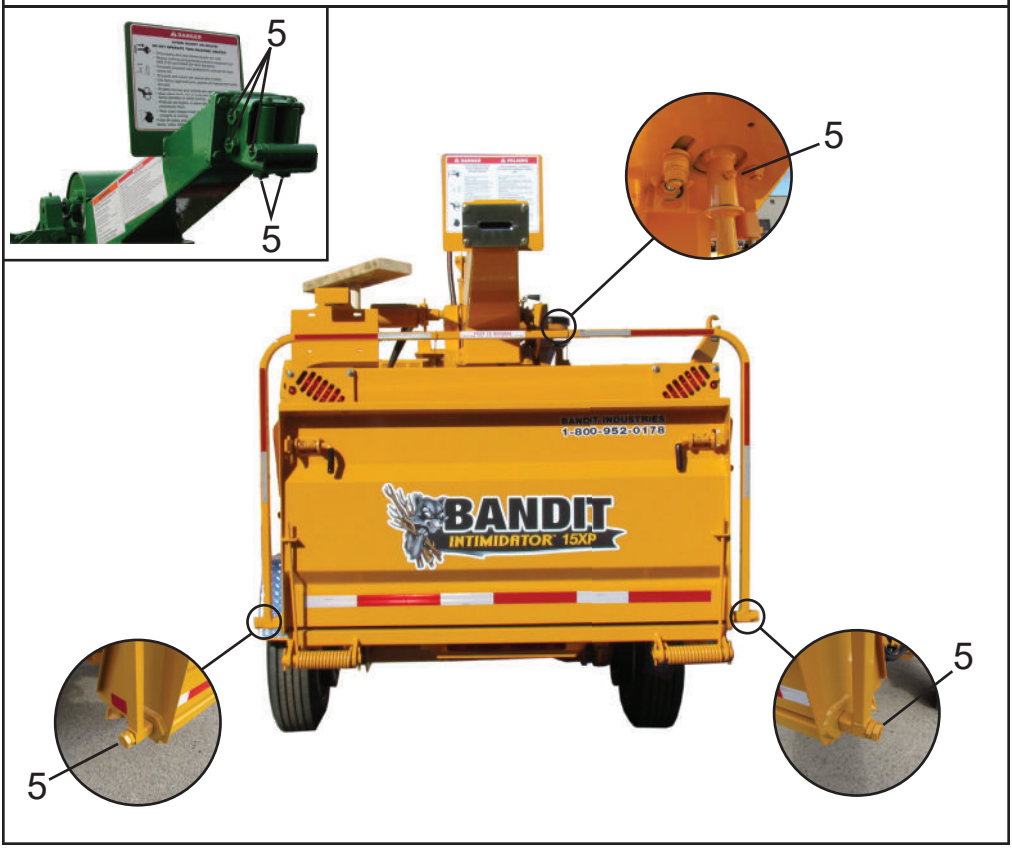

NOTICE Use as a reference only, locations may vary depending on options or component manufacturer. Lubrication point instructions are described on the machine, in the Lubrication & Coolant Section and Maintenance Section of this manual, or component manufacturer's manual.

LUBRICATION CHART

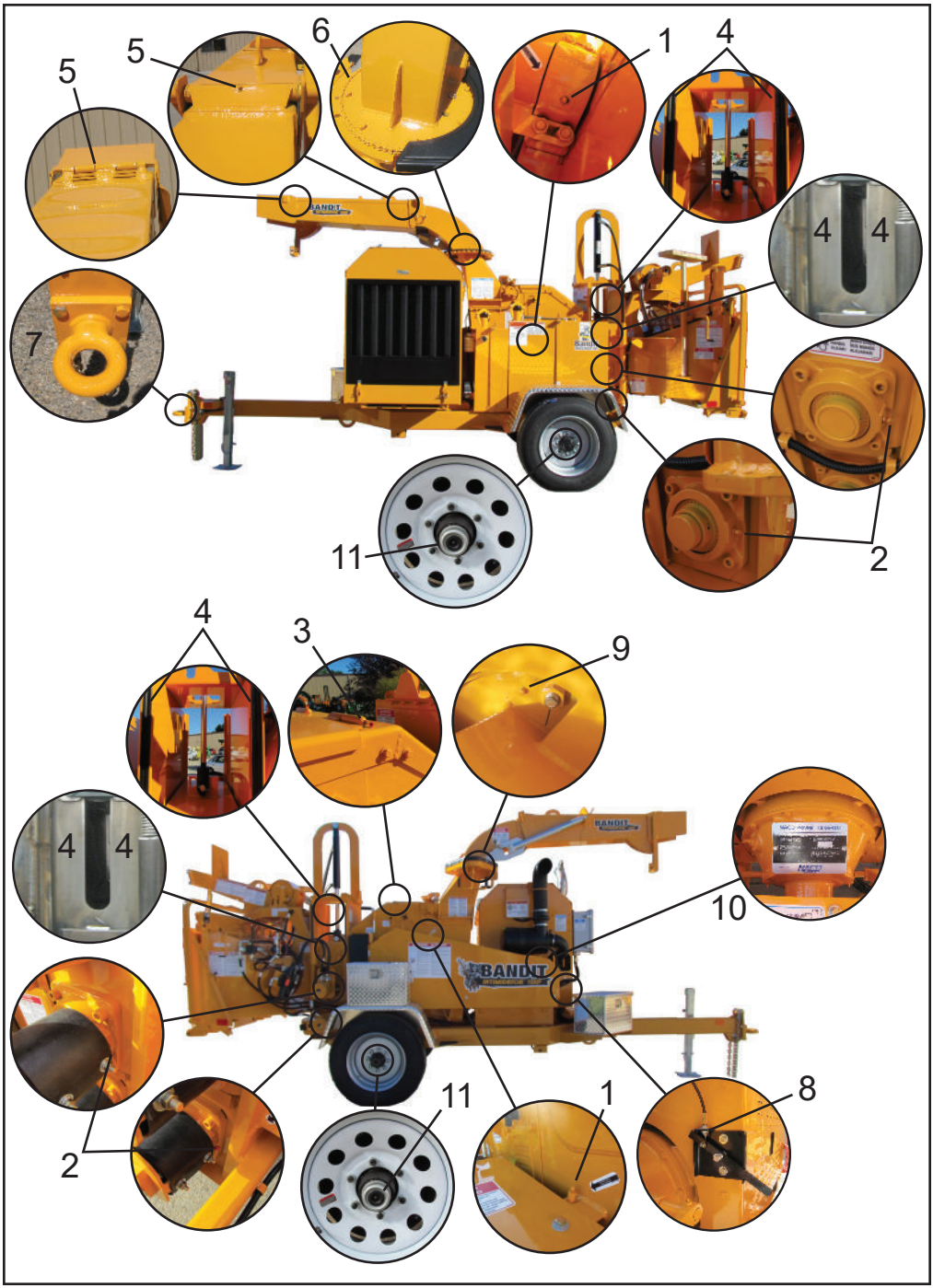

NOTICE Use as a reference only, locations may vary depending on options or component manufacturer. Lubrication point instructions are described on the machine, in the Lubrication & Coolant Section and Maintenance Section of this manual, or component manufacturer's manual.

LUBRICATION & COOLANT

1. **Engine:** Follow original equipment manufacturer's requirements for both changing oils and filters, refer to engine manual specifications.
2. **Engine Coolant:** Refer to engine manufacturer's manual specifications.
3. **Clutch:** Follow original equipment manufacturer's requirements for both greasing and adjusting. Frequently, adjust and lubricate per PTO manufacturer's manual.
4. **Wheel Bearings:** Follow axle manufacturer's instructions for greasing or oiling wheel bearings.
5. **Tracks (if equipped):** Follow track manufacturer's instructions for specific track lubricating procedures.
6. **Hydraulic Reservoir Tank:** Completely change hydraulic oil, suction screen(s), and flush the tank annually. Change hydraulic oil filter(s) AFTER FIRST 10 HOURS OF OPERATION. Then change hydraulic oil filter(s) every 3 months or 400 hours thereafter. Maintain hydraulic oil level 3/4 to 7/8 full. See hydraulic oil requirements below. Check hydraulic oil level in tank daily.
7. **High Pressure Filter(s) (if equipped):** If machine is equipped, change high pressure oil filter(s) AFTER FIRST 10 HOURS OF OPERATION. Then change high pressure oil filter(s) every 3 months or 400 hours thereafter.
8. **Hydraulic Fluid Requirements:** See pages 79 - 80 for hydraulic fluid requirements.
9. **Discharge Swivel:** Grease swivel plates for discharge every 3 months or as needed.
10. **Hood Hinge:** Make sure the hood hinge operates correctly, and is lubricated daily. Must replace hinge if damaged.
11. **Steel Friction Areas:** Lubricate all steel friction areas including, but not limited to pivoting, hinged, sliding, and rotating areas weekly. (i.e. control bar, folding tray, discharge flipper, hyd. valve linkages, height adjustable discharge, discharge T-handle, hydraulic bump bar, etc.)
12. **Pintle Eye Ring:** Keep greased monthly to reduce wear and extend the normal life of your pintle eye ring.
13. **Chain Operated Components:** Use a dry lubricant on any chain driven component weekly. (i.e. hydraulic swivel discharge, chain driven feedwheels, etc)
14. **Chipper & Feedwheel Bearings:** Use an EP-2 Lithium type grease only for all bearings. Purge chipper bearings with grease, you can not over grease these bearings. Grease feedwheel bearings daily with one shot of grease. Both types of bearings are designed with a relief system that will not allow over greasing. In other words, you can not hurt the bearing seals by pumping in too much grease. Wipe off excess grease. **Excessive grease will attract dirt.**

Most of the failures related to bearings are diagnosed as "Contamination". Contamination is caused by improper lubrication.

Especially important is proper lubrication when the chipper is setting idle. The bearings must be fully purged when shut down. Then the bearings must be again fully purged each thirty (30) days and the machine allowed to run for approximately 10 minutes. Then fully purged again before the machine is put back into operation. Failure to do this will ruin the bearings. Bearings corrode when the machine is setting idle.

The second largest cause of bearing failure is operating them at high speeds when the grease is cold. This causes the bearing race to turn on the shaft. Naturally this ruins the bearing as well as the shaft. Allow the bearings to turn at slower speeds for at least five minutes. Also check the bearing lock collar set screws or bearing locknut for tightness each 30 days. Loose set screws or locknut allows the race to turn on the shaft. Failed bearings diagnosed as contamination or cold starts at high speed are not covered by warranty of the bearing manufacturer.

15. **Feedwheel Slide Box:** Check that feedwheel slide box is working smoothly, oil with 10W/30 type motor oil daily. Clean and oil the slide guides. After pinning, chaining, and blocking the top yoke in the up position, clean and oil each side of the bottom yoke. Especially new machines need oiling to ensure correct operation during break-in.
16. **"Bandit Lever Throttle Cable (if equipped):** If the machine is equipped with a "Bandit" lever throttle system, lubricate inner throttle cable and cable ends with a cable lube or SAE 10W/30 oil every month. Replace throttle cable if it doesn't operate smoothly.

CHIPPER DRUM

NOTICE

Knives should be replaced in sets. These sets are determined by the amount of resharpening done to the knives. It should be reinstalled with another knife of comparable usage. It helps to keep the disc/drum balanced, and it helps maintain chip quality.
NEVER allow these knives to wear or be sharpened beyond absolute specified minimum distance from the center line of bolt.

5/8" x 5 1/2" x 9" (15.9 mm x 139.7 mm x 228.6 mm)
Chipper Knife

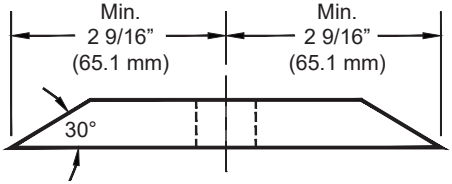

TROUBLE SHOOTING CHIPPER PROBLEMS

1. Chipper makes poor quality chips or does not feed properly.
- A. Knives have lost their edge. Sharpen or replace knives. DO NOT operate the Bandit with dull knives.
- B. Knife anvil worn or needs adjustment. Rotate, repair or replace (see Figure 1).
- C. Feedwheel(s) are not operating correctly. (SEE HYDRAULIC TROUBLE SHOOTING).
- D. The throat/base opening is a high-wear area. The feed plate anvil takes much of this wear but other areas wear as well. Attention must be paid to any areas where outer, noncutting edges of chipper knife are exposed. These areas must be built up with weld to maintain the original integrity.
- E. Knives are at the wrong angle. Knives must be ground at a 30° to 30 1/2° angle.
- F. Feedwheel teeth worn (REPLACE).
- G. Material being chipped is very small, dry or rotting. This type of material does not produce good chip quality.

2. Chipper Knife Hits Anvil.
- A. Check the anvil clearance at both sides of the knife by using a feeler gauge, the clearance should be approximately .120" (3.0 mm) from the highest knife.
- B. Check the chipper bearing bolts for tightness (SEE TORQUE CHART).

FIGURE 1

If anvil is not too worn, the two working edges can be ground or machined to repair.

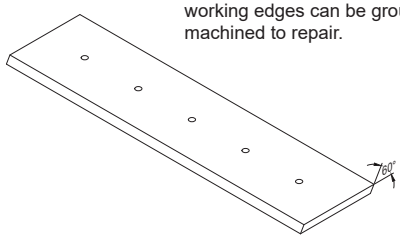

NOTE: Make sure the anvil clearance will still be obtainable after grinding or machining.

3. Discharge Plugs or Does Not Throw Chips Properly.
- A. Lugging engine on large material - keep engine RPM up.
- B. Knives are dull or worn to minimum size.
- C. Obstruction in discharge chute. Patches welded into the chute can cause obstruction of chip flow. Anything causing an obstruction will cause the chute to plug.
- D. Chipping rotting material that has little substance can also plug the discharge chute.
- E. Worn fan blades.

4. Chipper Bearings Running Too Hot.
- A. Improper lubrication - purge bearings once a day with EP-2 Lithium type grease.
- B. Chipper drum operating at too high RPM's. DO NOT exceed recommended RPM's.
- C. Bearings worn out (REPLACE).
- D. Bearing locknut is loose.

KNIFE SAVER KIT

Through various tests, Bandit has found that using the Knife Saver will increase the life span of chipper knives if used during the recommended times. Each knife installed in every new machine at Bandit has the Knife Saver used on it before leaving the factory. The Knife Saver can be purchased from your local Bandit dealer.
- Use the Knife Saver on brand new knives.
- Use the Knife Saver on freshly resharpened knives.
- Use the Knife Saver every day during the Daily Start-Up & Maintenance while the knives are checked.
- Use the Knife Saver when the machine is shut down for a break during the day.

PART NO.	DESCRIPTION
900-9901-68	Knife Saver Kit
900-9901-65	File For Knife Saver Kit Only
900-9901-63	Replacement Blades For Knife Saver
900-9901-66	Knife Changing Gloves

KNIFE SHARPENING

Only Bandit knives and hardware are recommended for use in your Bandit chippers. Only then can you be assured of a quality product that fits and performs the best to the standards of excellence that is expected from the Bandit chipper.

Chipper knives MUST be kept sharp at all times for the ultimate chipper and knife performance. The main cause of poor cutting performance is dull knives.

Dull Knives Cause:
- Excessive waste of engine horsepower
- Bad quality chips; chunks, slivers, etc.
- Excessive strain on knives and mounting hardware
- Excessive strain on chipper disc/drum bearings and total machine
- Excessive chipping vibration damaging the machine
- Excessive strain on drives, PTO's, engines, etc.
- Increase the probability of the discharge plugging and decreases the throwing distance
- Loss of time and money

The Dulling Of Chipper Knives Is Caused By:
- Poor quality knives
- Improper anvil to knife clearance
- Force feeding wood faster than chipper will accept
- Dirt, grit, or foreign material on the wood
- Chipper knives sharpened at wrong angle
- Improper care of knives and knife hardware

These are just a few factors, there are other situations that can lead to the dulling of chipper knives.

NOTICE

Many times a chipper knives cutting edge/point can be brought back to a good edge with a #10 Flat Bastard Mill File. This can reduce the amount of resharpening.

Typical Knife Sharpening Angles:
"Bolt-In" Knives = 30° to 30 1/2° Angle

Knives should be replaced in sets. These sets are determined by the amount of resharpening done to the knives (knife width). Resharpening knives reduces the width of the knife. Knife replacement should be done in sets of the same width knives. That will reduce chipping vibration and increase chipping performance.

NOTICE

- Keep knives sharp.
- Keep knife angle correct when sharpening.
- Do not over sharpen so knife is narrower than allowed width, or you will pack wood and break knives.
- Use correct knife size, knife quality, knife mounting hardware, and torque knife mounting hardware to the specified torque.
- Replace knife mounting hardware after (5) times of tightening.

⚠CAUTION

Do not sharpen the knives in a direction which produces a radius, or hollow grind, on the surface of the knife. Strength and life of the cutting edge is reduced.

- For maximum chipper efficiency, the original cutting angle must be maintained when the knives are sharpened. The knives should be machine ground to produce a flat, straight edge.
- Do not sharpen the knives with a hand held power grinder. The knife angle can't be held and heat will distort the metal.
- Sharpening techniques should be the same as those employed for any high carbon steel cutting edge. Use a coolant and exercise care not to draw temper or crack the cutting edges by excessive heating.
- Knives may be sharpened repeatedly as long as their original width is not reduced to less than the specified minimum width. If a knife measures less than the specified minimum width after sharpening, it must be discarded.
- Inspect the knives after sharpening to ensure the knives are free of cracks.
- Maintain spare sharpened knives to avoid downtime for knife sharpening.

⚠DANGER

Chipper knives are sharp and can be dangerous. It is always necessary for your protection to be extra careful and wear proper hand protection when handling knives.

NOTICE

USE CORRECT KNIFE AND HARDWARE

DO NOT use a size or style chipper knife, bolt or nut other than factory approved for this chipper - see manual.

DO NOT over torque or under torque knife bolts and nuts - see manual.

DO NOT resharpen knife more than minimum width - see manual.

DO NOT use a knife bolt or nut which has been tightened over (5) times - replace.

DO NOT improperly install the knife nuts. Flat surface of nut goes toward the chipper disc.

DO check the chipper disc/drum daily for secure welds, cracks, excessive wear, torqued bolts, elongated bolt holes and/or good bolt hole threads. If problem is found, contact chipper manufacturer or authorized dealer.

KNIFE CHANGING PROCEDURE

Only Bandit knives and hardware are recommended for use in your Bandit chippers. Only then can you be assured of a quality product that fits and performs the best to the standards of excellence that is expected from the Bandit chipper.

⚠DANGER

Chipper knives are sharp and can be dangerous. It is always necessary for your protection to be extra careful and wear proper hand protection when handling knives. Before changing knives make sure all shut down procedures are followed.

⚠DANGER

Before attempting any type of maintenance, disengage clutch, wait for the disc/drum to come to a complete stop, turn off engine, remove the ignition key, make sure the ignition key is in your possession, install the disc/drum lock pin, and disconnect the battery.

1. Disconnect the chipper hood engine disable plug.
2. Remove the padlock from the hood pin.
3. On disc chippers, recess the spring lock for the hood pin and retract the hood pin. On drum chippers, retract the hood pin.
4. Carefully open the hinged part of the chipper hood. Do not slam the chipper hood to the open position. This will cause damage to the hinge. If the hinge becomes damaged by slamming the hood open, replace the hinge immediately! If the hinge has become damaged, it will cause misalignment of the hood, the chipper disc/drum may hit the hood and cause a serious accident!
5. Changing the chipper knives is a two person job. One person, using a wooden block, holds the chipper knife in place while the other person removes the chipper knife hardware. Remove all of the knives in each pocket. If the machine is a disc chipper with 5/8” knife bolts, typically a 3/8” allen key and a 1 1/16” socket is required to change or torque the knife hardware. If the machine is a disc chipper with 1/2” knife bolts, typically a 5/16” allen key and a 7/8” socket is required to change or torque the knife hardware. If the machine is a drum chipper, typically a 15/16” socket is required to change or torque the knife hardware.
6. Once the knives have been removed, inspect the knife pocket. Check for secure welds, excessive wear, impact cracks, and elongated bolt holes on disc chippers or the condition of the knife bolt threads on drum chippers. If a problem is found, contact your local dealer or Bandit Industries.
7. Clean out the knife pocket at this time. Remove all debris from the pocket and knife bolt holes.
8. Sharpen, rotate, or replace the chipper knife. Knives should be professionally sharpened, maintaining angle and dimensional specifications. Knives should be replaced in sets. These sets are determined by the amount of resharpening done to the knives. It should be reinstalled with another knife of comparable usage. It helps to keep the disc/drum balanced, and it helps maintain chip quality. Do not allow the knives to wear beyond the absolute minimum specified distance from the center line of the bolt hole. Reinstall the chipper knives. Make sure to properly torque the knife hardware, see Bolt Torque Chart. Do not apply anti-seize to the knife bolts. Knife mounting hardware must be replaced after maximum of 4 - 5 knife rotations/changes to in sure safe clamping ability. All knives and knife mounting hardware must be factory approved.
9. Remove the disc/drum lock pin. Very carefully, manually with a bar, turn the chipper disc/drum to the next knife pocket. Reinstall the disc/drum lock pin.
10. Repeat steps 6 though 10, for each knife pocket.
11. Once the knives have been changed or rotated, check the anvil clearance. Make sure the clearance is maintained to the specified distance from the highest knife. Do Not under any circumstance attempt to rotate the chipper disc/drum while someone is inside the infeed hopper. They may become seriously injured, Do Not Do This!
12. Close the hinged part of the chipper hood and reinstall the hood pin, hood pin padlock, chipper hood disable plug, and on disc chippers make sure the spring lock for the hood pin springs back into position.

ANVIL ADJUSTMENT

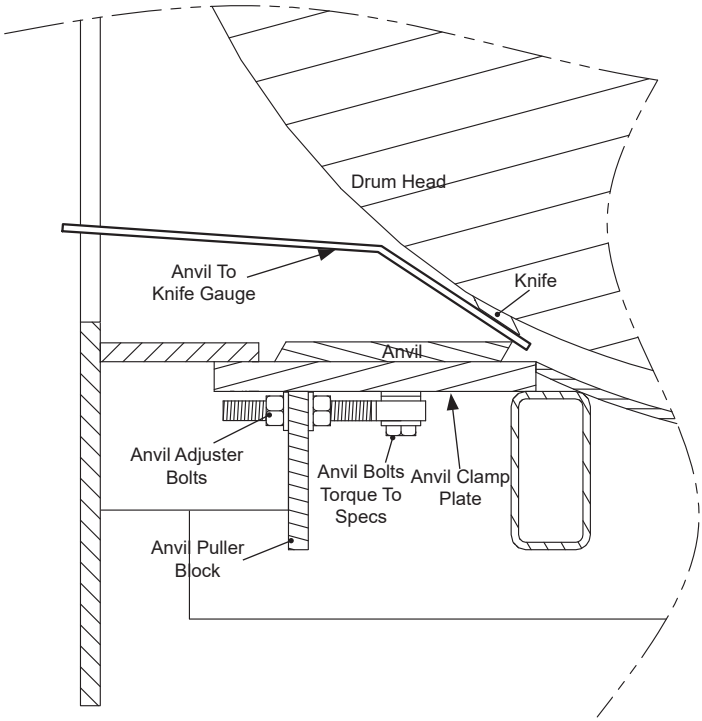

View looking through the feedwheels at the throat area

View looking up underneath drum head and base area

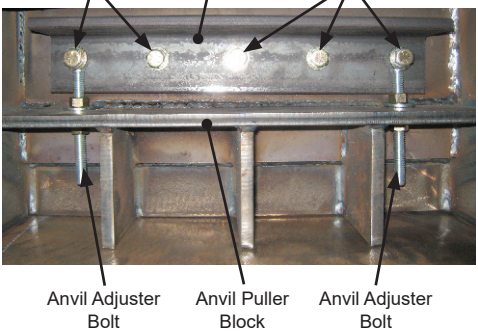

ANVIL ADJUSTMENT

⚠DANGER

Before attempting any type of maintenance, disengage clutch, wait for the disc/drum to come to a complete stop, turn off engine, remove the ignition key, make sure the ignition key is in your possession, install the disc/drum lock pin, and disconnect the battery.

Before working inside the infeed hopper or under the top feedwheel remove the yoke springs from the top yoke, raise the yoke , install the yoke lock pin, safety chain the yoke in the raised position, and insert a wooden block to assist in holding the yoke in the raised position.

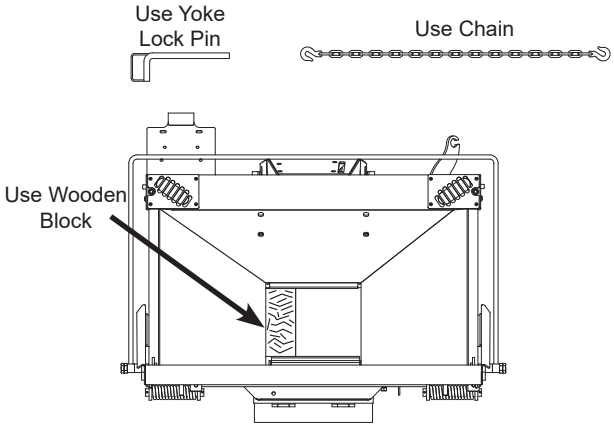

⚠DANGER

Do Not under any circumstance attempt to rotate the chipper drum while someone is inside the infeed hopper. They may become seriously injured, Do Not Do This!

CHECK THE ANVIL TO KNIFE CLEARANCE

1. This clearance should be checked on a weekly basis or as knives are changed. To check the anvil clearance, follow all pre-maintenance shut down procedures. Once all safety procedures are completed the anvil to knife clearance can be checked.
2. In order to check the clearance one person will need to climb into the infeed hopper. Use a feeler gauge or the anvil to knife gauge supplied by Bandit to check the clearance of the first knife to the anvil. Check the clearance at the left and right sides of the knife.
3. Once that knife has been checked climb back out of the infeed hopper, remove the drum lock pin, and very carefully rotate the chipper drum so the other knives can be checked.
4. Once all knives have been checked adjust the anvil according to the closest knife. The anvil to knife clearance should be .120 inches (3.0 mm).
5. Set the closet knife to this distance.

ANVIL ADJUSTMENT PROCEDURE

1. To adjust the anvil first loosen two of the hex nuts on either the inside or outside of the anvil puller block. If the anvil needs to be adjusted closer to the drum, loosen the outside anvil adjuster hex nuts. If the anvil needs to be adjusted away from the drum, loosen the inside anvil adjuster hex nuts.
2. Loosen the anvil bolts from underneath the machine.
3. Once the components have been loosened, move the anvil to the correct clearance using the anvil adjuster bolts and hex nuts.
4. Once the knife is set to the correct clearance, .120 inches (3.0 mm), retighten all components..
5. Make sure bolts are torqued to their specific bolt torques refer to bolt torques on page 44.
6. Carefully rotate the chipper drum to make sure all the knives clear the anvil.

ROPE/LINE SHEAR

⚠DANGER

Before attempting any type of maintenance, disengage clutch, wait for the disc/drum to come to a complete stop, turn off engine, remove the ignition key, make sure the ignition key is in your possession, install the disc/drum lock pin, and disconnect the battery.

⚠WARNING

Improperly adjusted or maintained rope/line shear could result in serious injury or death and damage to the chipper.

CHECK THE ROPE/LINE SHEAR TO KNIFE CLEARANCE

1. This clearance should be checked every 50 hours of operation or as the knives are changed. To check the rope/line shear clearance, follow all pre-maintenance shut down procedures. Once all safety procedures are completed the rope/line shear to knife clearance can be checked.
2. Remove the padlock on the hood pin, unplug the chipper hood engine disable plug, and pull the hood lock pin out to open the hood door.
3. Remove the drum lock pin.
4. Use a feeler gauge or the anvil to knife gauge supplied by Bandit to check the clearance of the first knife to the rope/line shear. Check the clearance at the left and right sides of the knife.
5. Once that knife has been checked, very carefully rotate the chipper drum so the other knives can be checked.
6. Once all knives have been checked adjust the rope/line shear according to the closest knife. The rope/line shear to knife clearance should be .120 inches (3.0 mm).
7. To set the closet knife to this distance, see the ROPE/LINE SHEAR ADJUSTMENT PROCEDURE.

NOTICE

- The rope/line shear clearance needs to be checked every 50 hours of operation and every time the knives are changed or sharpened.
- Make sure the shear counter knives are sharp and have not lost their edge every 50 hours of operation.
- File, machine sharpen, or replace as needed. A maximum of 1/8” (3.1 mm) can be machined off the shear counter knives. Make sure to keep the 35° angle.
- Make sure the adjustment hex bolts on the mount bar are tight and Loctited in place.
- Make sure the counter knife bolts are tight and Loctited in place.

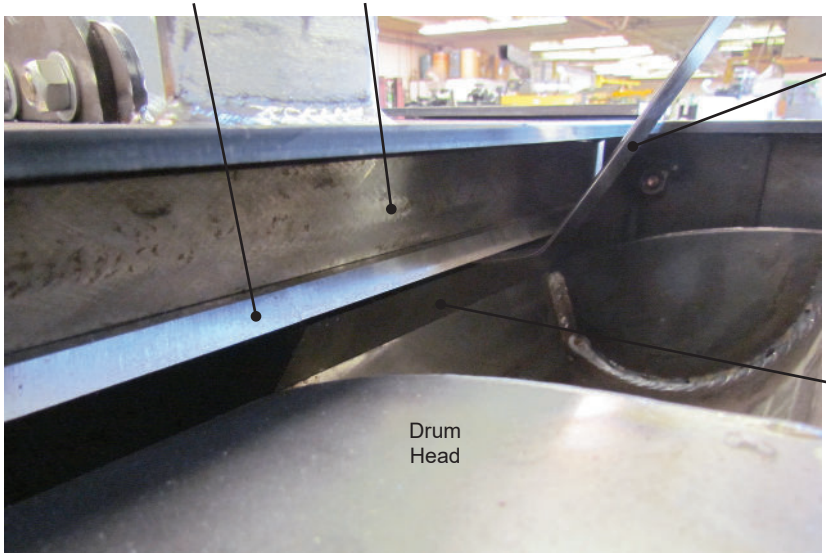

ROPE/LINE SHEAR

⚠DANGER

Before attempting any type of maintenance, disengage clutch, wait for the disc/drum to come to a complete stop, turn off engine, remove the ignition key, make sure the ignition key is in your possession, install the disc/drum lock pin, and disconnect the battery.

ROPE/LINE SHEAR COUNTER KNIFE REPLACEMENT

1. To replace the rope/line shear bar knife, first remove the rope/line shear adjustment cover on either side of the drum housing.
2. Remove the two adjustment hex bolts on each side rope/line shear mount bar.
3. Move the rope/line shear towards the feed system.
4. Pull the counter knife and mount out the side of the drum housing.
5. Remove the shear bar knife bolts.
6. Clean the Loctite off the counter knife bolts and from the mounting holes.
7. Install the new counter knife to the mount bar.
8. Apply Loctite 243 (blue) to the counter knife bolts and torque them to 15 ft-lbs (20 Nm).
9. Slide the rope/line shear assembly back through the side of the drum housing and set into place.
10. Follow the **ROPE/LINE SHEAR ADJUSTMENT PROCEDURE** to finish installing the shear assembly.
11. Remove the drum lock pin and carefully rotate the chipper drum to make sure all the knives clear the rope/line shear.

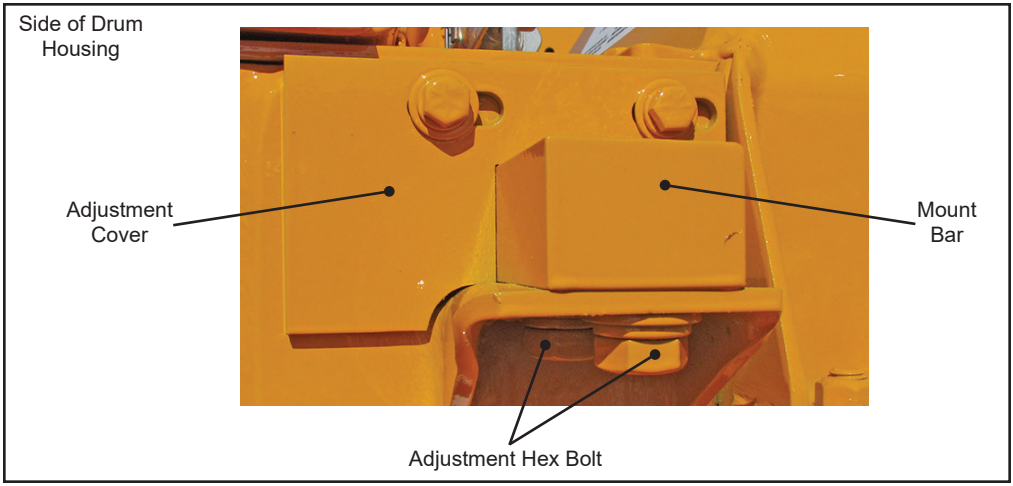

⚠DANGER

Before attempting any type of maintenance, disengage clutch, wait for the disc/drum to come to a complete stop, turn off engine, remove the ignition key, make sure the ignition key is in your possession, install the disc/drum lock pin, and disconnect the battery.

ROPE/LINE SHEAR ADJUSTMENT PROCEDURE

1. To adjust the rope/line shear, after the clearance has been checked first loosen the rope/line shear adjustment cover on either side of the drum housing.
2. Remove the two adjustment hex bolts on each side rope/line shear mount bar.
3. Clean the Loctite off the adjustment hex bolts and from the mounting holes.
4. Move the rope/line shear to the correct clearance.
5. Once the knife is set to the correct clearance, .120 inches (3.0 mm), retighten all components.
6. Apply Loctite 243 (blue) to the adjustment hex bolts and torque them to 180 ft-lbs (244 Nm).
7. Tighten the rope/line shear adjustment covers.
8. Remove the drum lock pin and carefully rotate the chipper drum to make sure all the knives clear the rope/line shear.

OPTIONAL CHIP BREAKER ASSEMBLY

⚠DANGER

Before attempting any type of maintenance, disengage clutch, wait for the disc/drum to come to a complete stop, turn off engine, remove the ignition key, make sure the ignition key is in your possession, install the disc/drum lock pin, and disconnect the battery.

⚠DANGER

The chip breaker assembly is sharp and can be dangerous. It is always necessary for your protection to be extra careful and wear proper hand protection when handling the chip breaker assembly. Before removing or installing the chip breaker make sure all shut down procedures are followed.

The chip breaker assembly must be installed as shown in Figure 1. Bolt the chip breaker assembly to the bottom mount plate and then bolt in to the belly band of the drum housing.

If the chip breaker assembly is removed, the replacement plate must be bolted to the bottom mount plate in place of the chip breaker assembly (see Figure 2) and mounted to the belly band of the drum housing. A machine without a replacement plate or chip breaker assembly will be more susceptible to plugging.

FIGURE 1

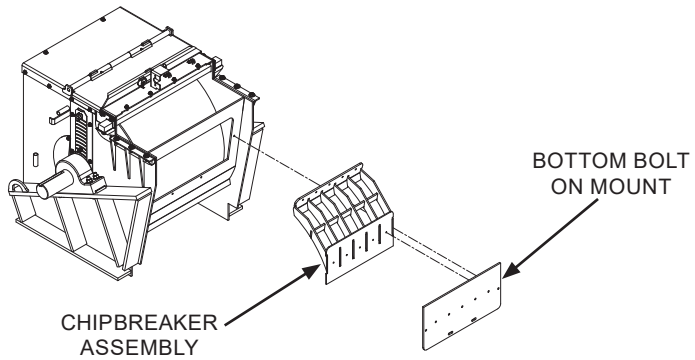

FIGURE 2

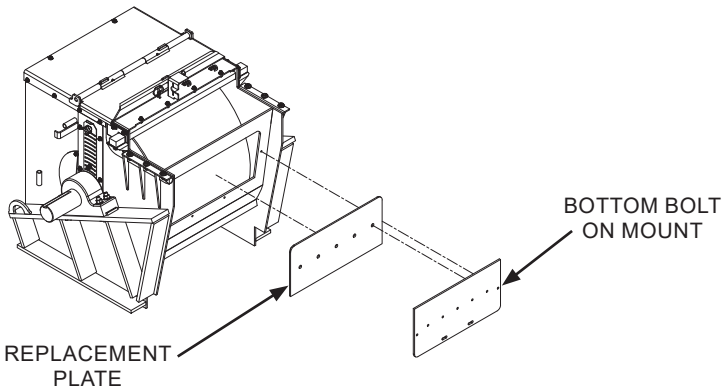

⚠DANGER

Do not operate the machine without the chip breaker assembly or the replacement plate bolted to the bottom mount plate and the bottom mount plate bolted to the belly band of the drum housing.

PROCEDURE FOR UNPLUGGING YOUR CHIPPER

If your chipper is plugging, it is usually caused by allowing the engine to drop below required R.P.M.'s. This can be resolved by simply shutting the feedwheel(s) off when the engine begins to lug down. Operating the engine at speeds lower than full R.P.M.'s causes your chipper to plug. **Always run the chipper at full engine speed.** If your chipper is equipped with the optional autofeed feature, make sure it is set correctly. The setting for the low R.P.M. stop must be high enough not to allow the chipper discharge to plug. Dull chipper knives also contribute to chipper plugging. Dull knives can create slivers and chunks, causing the engine to lug excessively. Both of the aforementioned conditions cause a plugging situation.

⚠DANGER

If the chipper is properly maintained and operated correctly, the chipper should not plug. In the unlikely event that the chipper becomes plugged, do not attempt to clean out the discharge or chipper housing in the field. Take the machine to a local dealer or professional shop. If the machine is a rental, take it back to the rental company.

⚠DANGER

If the discharge or hood need to be removed, always use some sort of mechanical device like an overhead hoist, loader, lift truck, etc. that is rated for lifting that component. Follow all OSHA instructions for lifting.

⚠DANGER

Pinch points are created between the disc/drum and the housing for the disc/drum. Use a pry bar or wood bar to turn the disc/drum during the unplugging process. Do not use your hands to try to break free and turn a jammed disc/drum. The disc/drum could break free suddenly and your hand could become injured in the pinch point.

⚠DANGER

The knives are very sharp and can cause injury if you come in contact with the knives during the unplugging process.

STEPS TO FOLLOW WHEN UNPLUGGING YOUR CHIPPER

1. Before attempting any type of maintenance disengage clutch, turn off engine, wait for the disc/drum to come to a complete stop, install the disc/drum lock pin, disconnect battery, and make sure the ignition key is in your possession.
2. There should, also, be at least two people on site during maintenance and service procedures in case an accident should occur.
3. Make sure the chipper disc/drum is **NOT** turning and then open the hinged portion of the chipper hood.
4. Using gloved hands and some type of raking tool, dig the chips out of the chipper housing.
5. If the discharge chute is plugged, use a raking tool to pull the majority of chips out of the open outlet end of the chute. If the discharge chute needs to removed, use some sort of mechanical device like an overhead hoist, loader, lift truck, etc. that is rated to lift the discharge. Follow all OSHA instructions for lifting.
6. Never allow a person to turn the chipper disc/drum when someone else is working inside the chipper housing. More than likely, the chipper disc/drum will turn hard then loosen causing it to turn faster. If another person is anywhere near the chipper disc/drum, they may be injured.
7. Never turn the chipper disc/drum by hand. Always use a pry bar or wood bar. This will prevent the person turning the disc/drum from being injured should the disc/drum break loose.
8. Reinstall the discharge chute, mount securely and point it in a safe direction away from anything.
9. Never leave the chipper hood open and try to start the engine in order to engage the chipper disc/drum to blow chips out of the housing, this is very hard on the P.T.O. of the chipper and may burn clutch plates. Also, the flying debris is very dangerous. An exposed chipper disc/drum turning very fast creates an unsafe condition. In other words, **DO NOT** start the chipper with the hood open because it is just too dangerous.
10. Once the disc/drum turns freely, close the chipper hood, insert the hood pin, install the padlock in the hood pin, reinstall the chipper hood engine disable plug, make sure the spring lock for hood pin springs back to the correct operating position on disc chippers, pick up all tools, make sure the chipper is free of all debris, start engine, properly engage clutch and throttle to full speed. Insert a small branch into the feedwheel(s). If the chips discharge properly, the chipper is clear and normal operation may resume.

BELT TENSION

⚠DANGER

Before attempting any type of maintenance, disengage clutch, wait for the disc/drum to come to a complete stop, turn off engine, remove the ignition key, make sure the ignition key is in your possession, install the disc/drum lock pin, and disconnect the battery.

NOTICE

Every month, the beltshield needs to be removed and the belts need to be checked and adjusted. For best results use a good belt tension tester. The slot in the beltshield is for a quick daily check of the belt tension.

NOTICE

Do not over tighten the hydraulic pump belt. Most all pump failures result from too much side load on the pump shaft. Too much belt tension is very easy to detect inside a failed pump. Pumps with this condition will not be covered under warranty.

GENERAL RULES FOR TENSIONING

1. Check tensioning during the first 2 through 48 hours of run-in operation especially.
2. Over tensioning or under tensioning shortens belt and bearing life.
3. Keep belts free from foreign materials that may cause the belt to slip.
4. Make V-drive inspection on a periodic basis. Never use belt dressing as this will damage the belt and cause early failure.
5. Belts should never be forced over the sheave. Allow enough room for belts to slip on.
6. Always make sure sheaves are aligned properly.

MAIN DRIVE BELTS

1. Follow all pre-maintenance shut down procedures.
2. Locate the center of the belt span between the sheaves.
3. Push or pull down on each poly band belt until the belt has deflected 3/8” (9.5 mm).
4. Record the push or pull down force on each poly band belt. The force should be 60 to 64 lbs. (27.2 to 29.0 kg) for machines up to 150 Hp; or 48 to 51 lbs. (21.8 to 23.1 kg) for machines with 150 Hp or above.
5. Adjust the belt tension if the force fall outside of this range.

PUMP DRIVE BELTS (IF EQUIPPED)

1. Follow all pre-maintenance shut down procedures.
2. Locate the center of the span between sheaves.
3. Push or pull down on the belt until the belt has deflected 1/4” (6.4 mm).
4. Record push or pull down force. The force should be 12 lbs (5.4 kg).
5. Adjust the belt tension if the force falls outside of this range.

⚠WARNING

If belts are not properly adjusted belts will slip, glaze over, and be ruined. **THIS FAILURE IS NOT COVERED BY WARRANTY!**

NOTICE

DO NOT IGNORE THIS MAINTENANCE RULE
New belts stretch very soon and must be adjusted several times in the first few hours of operation. Adjust after one hour of operation, then every four hours until the belts quit stretching. Failure to do this will cause the belts to burn and fly off. **THIS FAILURE IS NOT COVERED BY WARRANTY!**

NOTICE

It is a good practice to rotate the sheaves during tensioning. Then recheck deflections. The belts may need to be tightened again.

⚠DANGER

Keep hands clear of all pinch points

ADJUSTMENT PROCEDURE

1. Remove beltshield.
2. To adjust the belt tension, loosen the four engine mounting bolts and the jam nuts on the engine adjuster on the radiator end of the engine.
3. Adjust the belt tension with the engine adjuster on the clutch end of the engine. If you have to push the engine with the adjuster, the belts will tighten slightly after the engine is realigned.
4. Use the engine adjuster on the radiator end of the engine to realign the engine, so the engine sheave and chipper sheave are aligned. The sheaves can be checked with a string or straight edge.
5. Torque the two engine mounting bolts (see Torque Chart for the correct torque) on the opposite side of the engine from the engine adjusters.
6. Loosen the jam nuts on the engine adjuster on the radiator end of the engine.
7. Torque the engine mount bolt and then tighten the engine adjuster jam nuts on the radiator end.
8. Hand tighten the remaining engine mount bolt. Loosen the engine adjuster jam nuts all the way and torque the engine mount bolt.
9. Tighten the engine adjuster jam nuts on the clutch end.
10. Recheck the belt tension and alignment, if readjustment is needed go back to step 2.
11. Reinstall beltshield.

BELT TENSION

FIGURE 1

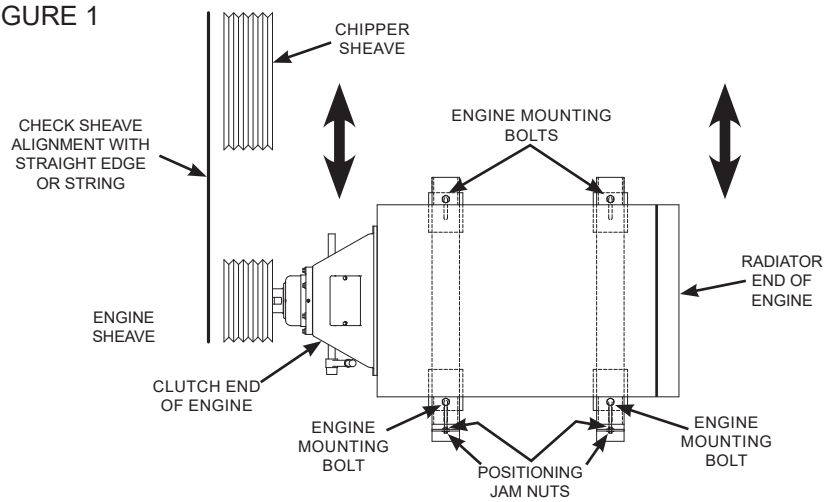

FIGURE 2

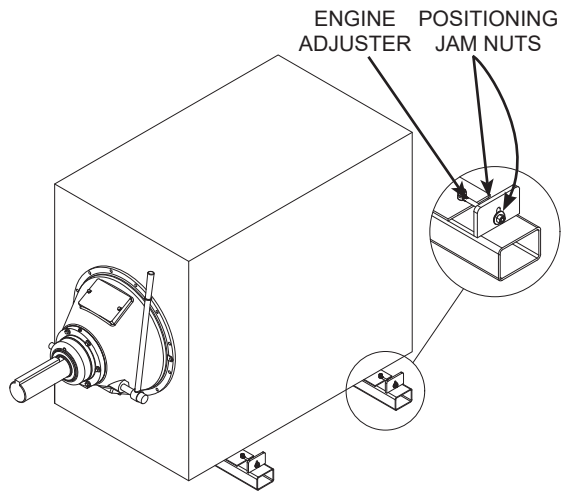

BELT TENSION GAUGES

SINGLE BARREL GAUGE
(UP TO 30 lbs.) **900-1919-23**

DOUBLE BARREL GAUGE
(UP TO 66 lbs.) **900-1917-02**

TRIPLE BARREL GAUGE
(UP TO 90 lbs.) **900-1919-67**

FIVE BARREL GAUGE
(UP TO 165 lbs.) **900-1919-66**

Worn or misaligned belts and sheaves in the power train causes belt slippage, thus power loss. Keep the power train working for you, not against you, by checking for needed adjustment or replacement.

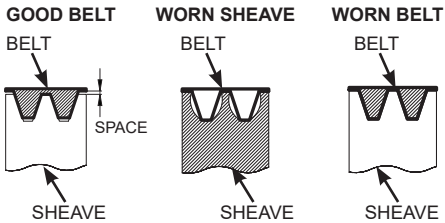

Main Drive Belts: 3/8" (9.5 mm) deflection with 60 - 64 lbs (27.2 - 29.0 kg) of force for machines up to 150 Hp; or 3/8" (9.5 mm) deflection with 48 - 51 lbs. (21.8 - 23.1 kg) of force for machines with 150 Hp or above.
Pump Drive Belts: 1/4" (6.4 mm) deflection with 12 lbs (5.4 kg) of force.

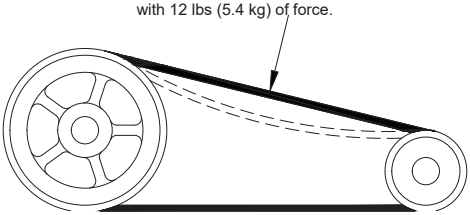

PROPER PROCEDURE FOR INSTALLATION AND REMOVAL OF J.B. COUPLERS AND TAPERED FEEDWHEEL MOTORS

A. **Proper Equipment Needed**

1. Feedwheel motor with tapered shaft.
2. 5/16” x 9/32” x 1 1/4” long key (900-3937-23) for “DT” motor.
   5/16” x 9/32” x 15/16” long key (900-3934-06) for “RE/TG” motor.
   3/16” x 3/16” x 3/4” long key (900-3937-03) for “RS/TE” motor.
3. Correct feedwheel shaft, coupler and taper ass’y
4. Loctite 263 (red).
5. Loctite 243 (blue).
6. Emery cloth and/or a file.
7. A degreaser agent.
8. Self locking nut.
9. Hammer.
10. Torque wrench and 1 5/8” socket for “DT” motor.
    1 3/8” socket for “RE/TG” motor.
    1 3/16” socket for “RS/TE” motor.
11. 1 1/16” hand wrench for “RE/TG” motor
    7/8” hand wrench for “RS/TE” motor

B. **Installation Procedure**

1. Remove any sharp edges on the coupler bores or the motor shaft. Example: Emery cloth or file for burrs on keyways or shafts.
2. Clean the coupler bores and motor shaft with a degreasing solvent.
3. Install the correct key in the feedwheel motor shaft.
4. Slide the coupler onto the motor shaft, making sure that the two mate tightly. Example: The coupler does not rock or slop on the shaft.
5. Install the self locking nut with Loctite 263 on the threads.
6. Tighten to the correct torque, 340 ft.-lbs. (461 Nm) for “DT” motor, 250-300 ft.-lbs. (339-407 Nm) for “RE/TG” motor, & 150-170 ft.-lbs. (203-230 Nm) for “RS/TE” motor.
7. Slightly tap with a hammer on the coupler face to ensure proper seating.
8. Retorque self locking nut.
9. Deburr and degrease the feedwheel shaft.
10. Install the motor and coupler assembly onto the feedwheel shaft.
11. Install the correct tapered pin through the coupler and feedwheel shaft.
12. If coupler pin is threaded and is equipped with a nut, make sure the nut is flush with top of pin.
13. Hammer the pin into the coupler to secure the coupler and feedwheel shaft. If the pin is threaded and has a nut do not hammer the pin directly, use a piece of wood as a buffer.
14. If the tapered pin is equipped with a nut, put Loctite 243 on the threads and then tighten nut flush with top of pin.

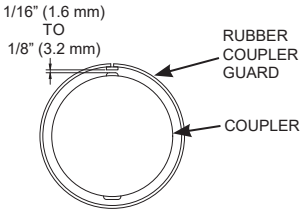

Press Tool for Coupler Pin Removal
Part Number: 981-0501-61

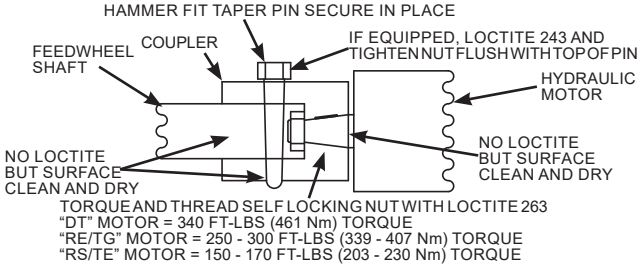

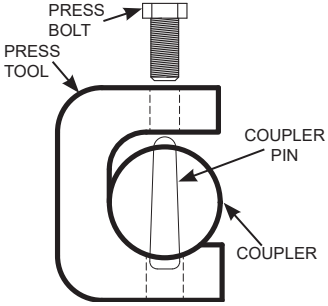

Removal if tapered pin is equipped with a nut to assist in pin removal: Use a hand wrench and turn the tapered pin nut clockwise, half a turn and then hit the small end of the tapered pin with a hammer and punch. Repeat this process until pin is removed.

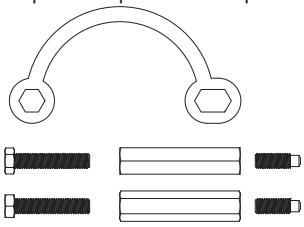

Coupler Removal Tool Kit
Part Number: 980-2003-59

⚠CAUTION Always wear proper safety equipment and take caution with tapered pin when attempting to remove. The use of this tool will assist in the removal of the tapered pin in the feedwheel coupler. Lubricate end of bolt and threads with grease. Position the press tool so that it cradles the coupler, with the large end of the tapered pin at the side opposite the press bolt. You may want to remove yoke springs to get easier access to coupler. Set the tool as described and hand tighten press bolt to snug tool against coupler. Make sure press bolt is set on small end of tapered pin, and that pin will go through hole in tool without interference. Use of a 1/2” impact wrench is recommended. Run impact on bolt to start pin removal, then usually a good hit with hammer on the end of bolt will knock out the pin. You may have to run impact on bolt and hit with hammer a few times to remove pin. Do not spend excessive time trying to remove the pin and coupler. If problems occur during pin and coupler removal, contact your nearest dealer or Bandit Industries.

PROPER PROCEDURE FOR INSTALLATION AND REMOVAL OF TAPERLOCK KEYLESS FEEDWHEEL COUPLERS AND FEEDWHEEL MOTORS

A. **Proper Equipment Needed:**

1. Feedwheel motor with straight shaft.
2. Correct feedwheel shaft and coupler ass'y.
3. Emery cloth and/or a file.
4. Torque wrench.
5. 17mm crow foot.
6. A degreaser agent.

NOTICE

Never tighten locking screws before shaft installation, as the coupler sleeve bore can be permanently deformed even at relatively low tightening torques.

B. **Installation Procedure**

1. Remove any sharp edges on the coupler bore, the motor shaft, or the feedwheel shaft. Example: Emery cloth or file for burrs on shafts.
2. Rough up the feedwheel shaft and feedwheel motor shaft horizontally along the axis of the shaft.
3. Clean the coupler bore, motor shaft, and feedwheel shaft with a degreasing solvent.
4. Slide the coupler onto the feedwheel shaft until it stops.
5. Install the motor with the torque arm installed into the feedwheel shaft.
6. Tighten the coupler locking screws in several stages by using 1/4 turns or 90° in a clockwise or counter-clockwise direction (not diametrically opposed, like wheel lug nuts) until you reach a torque of 55 ft.-lbs. (74 Nm).
7. Make 2 more passes torquing the locking screws to 55 ft.-lbs. (74 Nm) after the torque has been reached.
8. Make 1 more pass torquing the locking screws to 52 ft.-lbs. (71 Nm). No screws should turn at this point or repeat step 7.

⚠WARNING

DO NOT completely remove locking screws before outer collars are disengaged from inner ring. A sudden release of the outer collars involves high separating forces and could result in permanent injury or death. Be certain that outer collars are disengaged from inner ring before completely removing locking screws.

C. **Removal Procedure**

1. Make sure there are no torque or thrust loads on the coupler, feedwheel shaft, or feedwheel motor.
2. Loosen the locking screws in several stages by using 1/2 turns, following a clockwise or counter-clockwise direction, until the coupling can be moved on the shaft.
3. Remove the feedwheel motor and then the coupler.

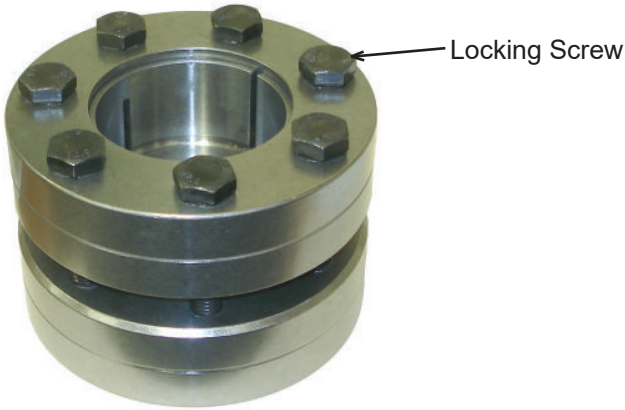

Taperlock Keyless Coupler

SERVICING / CHANGING CHIPPER BEARING
(FOR REXNORD® 6000 SERIES)

⚠DANGER

Before attempting any type of maintenance, disengage clutch, wait for the disc/drum to come to a complete stop, turn off engine, remove the ignition key, make sure the ignition key is in your possession, install the disc/drum lock pin, and disconnect the battery.

NOTICE Proper installation is critical to bearing life. Improper installation could cause premature or immediate failure. Particular care must be taken not to create a preload on the bearings while tightening the locknut. Use of a good quality torque wrench is also important to your safety as well as proper bearing installation.

STEPS TO REPLACE A CHIPPER BEARING

1. Clean the shaft so that it is free from burrs and rust. Do not coat the chipper shaft or the bore of the bearing adapter with a preservative, lubricant, or other substance such as Loctite®.
2. If the adapter sleeve happens to get removed from the bearing during installation, the locking pin in the adapter sleeve must be aligned with the keyway in the inner bore. See Figure 3.
3. Offset the bearing on the shaft about 1/8" (3.2 mm) from its intended position towards the base, so when the bearing is tightened up on the shaft, the bolt holes will line up.
4. Hand tighten the locknut to take out the looseness, the use a hook type spanner wrench to bring the locknut to a snug fit.
5. Mark the locknut and chipper drum shaft with a grease pencil or a dark marker. Use a soft steel drift pin and a hammer to drive the locknut clockwise one full turn. Make sure the adapter sleeve does not turn on the shaft while tightening. If the adapter sleeve is turning, it can be held by placing a hook type spanner wrench in the split area of the sleeve.
6. Look at the visual indicators on the locknut. At least one of the visual indicators should show an indication of deflection. See Figure 1. If at least one indicator does not show indication of tightness after 1/4 turn beyond the final adjustment, the locknut needs to be completely loosened and start over with step 3.
7. If the entire indicator window becomes completely blue with the possibility of yellow and red fringing, the bearing has been over-tightened. See Figure 2. The locknut needs to be completely loosened and start over with step 3.
8. Loosen all the bearing bolts to release the preload on the bearings if there is any. Keep the weight of the drum head off the bearings while bolting down. Bolt both bearings down and torque the bolts to 220 ft.-lbs. (298 Nm).
9. If the drum head does not spin freely, there is a preload on the bearings. The bearing will need to be completely loosened and steps 3 through 8 need to be repeated.
10. Tighten the set screws in the locknut to 13-15 ft.-lbs. (18-20 Nm) of torque with a 5/32" hex type torque wrench.

Figure 1

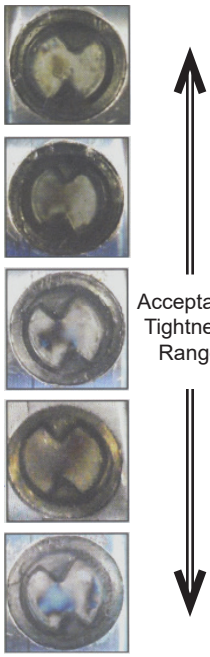

STEPS TO REMOVE A CHIPPER BEARING

1. Back out the locknut set screws.
2. Loosen the locknut with an impact spanner wrench or a soft drift pin in a counter-clockwise direction until the bearing adapter assembly becomes completely loose.
3. Remove the mounting bolts.
4. The bearing should slide freely off the shaft.

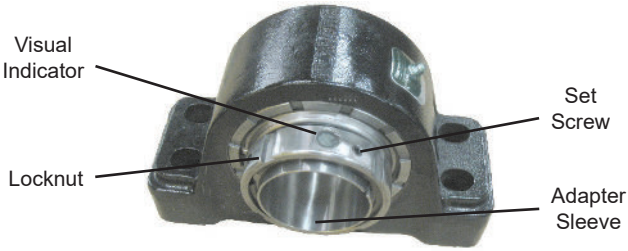

Figure 2

SERVICING / CHANGING CHIPPER BEARING
(FOR REXNORD® 6000 SERIES)

⚠DANGER

Before attempting any type of maintenance, disengage clutch, wait for the disc/drum to come to a complete stop, turn off engine, remove the ignition key, make sure the ignition key is in your possession, install the disc/drum lock pin, and disconnect the battery.

NOTICE Proper installation is critical to bearing life. Improper installation could cause premature or immediate failure. Particular care must be taken not to create a preload on the bearings while tightening the locknut. Use of a good quality torque wrench is also important to your safety as well as proper bearing installation.

STEPS TO INSTALL BOTH CHIPPER BEARINGS

1. Clean the shaft so that it is free from burrs and rust. Do not coat the chipper shaft or the bore of the bearing adapter with a preservative, lubricant, or other substance such as Loctite®.
2. If the adapter sleeve happens to get removed from the bearing during installation, the locking pin in the adapter sleeve must be aligned with the keyway in the inner bore. See Figure 3.
3. Position the bearings on the shaft to their intended position. If the bearings do not slide freely on the shaft, loosen the locknut until the bearing does.
4. Keep the weight of the drum head off the bearings while bolting the bearings down.
5. Center the chipper drum inside the base and bolt the bearing down on the right side of the machine and tighten the four bearing bolts to 220 ft.-lbs. (298 Nm) of torque.
6. Offset the chipper drum approximately 1/8” (3.2 mm) from center of the base to the left side of the machine.
7. Hand tighten the locknut to take out the looseness, then use a hook type spanner wrench to bring the locknut to a snug fit.
8. Mark the locknut and chipper drum shaft with a grease pencil or a dark marker. Use a soft steel drift pin and a hammer to drive the locknut clockwise one full turn. Make sure the adapter sleeve does not turn on the shaft while tightening. If the adapter sleeve is turning, it can be held by placing a hook type spanner wrench in the split area of the sleeve.
9. Look at the visual indicators on the locknut. At least one of the visual indicators should show an indication of deflection. See Figure 1. If at least one indicator does not show indication of tightness after 1/4 turn beyond the final adjustment, the locknut needs to be completely loosened and start over with step 6.
10. If the entire indicator window becomes completely blue with the possibility of yellow and red fringing, the bearing has been over-tightened. See Figure 2. The locknut needs to be completely loosened and start over with step 6.
11. Offset the bearing on the left side of the machine about 1/8” (3.2 mm) from its intended position towards the base, so when the bearing is tightened up on the shaft, the bolt holes will line up.
12. Repeat steps 7 through 10 to tighten the right side bearing on the shaft.
13. Loosen all the bearing bolts to release the preload on the bearings if there is any. Bolt both bearings down and torque the bolts to 220 ft.-lbs. (298 Nm).
14. If the drum head does not spin freely, there is a preload on the bearings. The bearings will need to be completely loosened and steps 3 through 13 need to be repeated.
15. Tighten the set screws in the locknut of both bearings to 13-15 ft.-lbs. (18-20 Nm) of torque with a 5/32” hex type torque wrench.

Figure 3

SERVICING / CHANGING CHIPPER BEARING
(FOR LINK BELT PB22647FHK4/2 SERIES)

NOTICE

Proper installation is critical to bearing life. Improper installation could cause premature or immediate failure. Particular care must be taken not to create a preload on the bearings while tightening the locknut. Use of a good quality torque wrench is also important to your safety as well as proper bearing installation.

1. Clean the shaft so that it is free from burrs and rust. Do not coat the chipper shaft or the bore of the bearing adapter with a preservative or lubricant.
2. Remove the bearing adapter and apply a light weight oil to the outer surface and threads. Reassemble the adapter in the bearing with about 1/4" (6.4 mm) of clearance between the bearing face and lockwasher. Repeat the process to the other bearing.

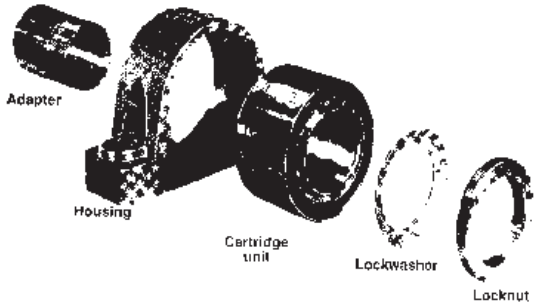

3. Center the chipper drum inside the base and bolt the bearing down on the left side of the machine and tighten the four bearing bolts to 220 ft.-lbs. (298 Nm) of torque.
4. Keeping the drum centered and the weight of the drum head off the bearings, take a large flat blade screwdriver to wedge between the bearing's face and lockwasher on the left side of the machine. Use the screwdriver to draw the adapter through the bearing until there is a snug fit between the adapter and chipper drum shaft. Finger tighten the locknut, the use a hook type spanner wrench to bring the locknut to a snug fit.
5. Mark the locknut and chipper drum shaft with a grease pencil or a dark marker. Use a soft steel drift pin and a hammer to drive against the face in a circular movement of the locknut as shown in the following picture. Retighten the locknut with a spanner wrench and repeat procedure until 7/8 of a turn is achieved.

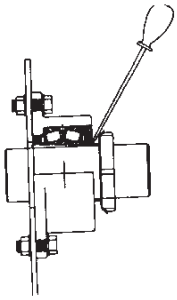

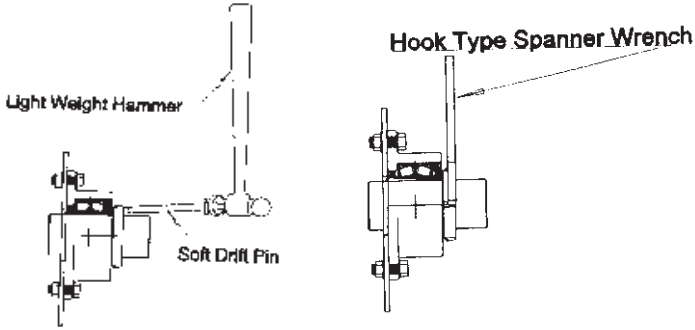

6. Find the tang of the lockwasher that is in line with a slot in the locknut and bend it over into the slot. If needed tighten the locknut slightly until one of the slots line up.
7. Offset the bearing on the right side of the machine about 1/8" (3.2 mm) to 3/16" (4.8 mm) away from the drum housing, so that when the bearing is tightened up on the shaft, the bolt holes will line up. The bearing housing should not be wedged up against the base, if it is the bearing will have a preload.
8. Repeat steps 4 through 6 to tighten the right side bearing on the shaft.
9. Loosen all the bearing bolts to release the preload on the bearings if there is any. Bolt both bearings down and torque the bolts to 220 ft.-lbs. (298 Nm)
10. If the drum head does not spin freely, there is a preload on the bearings and steps 7 through 9 need to be repeated.

SERVICING / CHANGING FEEDWHEEL BEARING
(WITH THE GRIP TIGHT BEARING BEHIND FEEDWHEEL MOTOR)

Your Bandit Chipper may be equipped with a tapered lock style (Grip Tight) feedwheel bearing on the hydraulic motor side of the feedwheel and a conventional (set screw) style on the opposite side. With the Grip Tight bearing this gives a very positive locking system to the feedwheel shaft. The set screws on both bearings should still be checked as part of normal maintenance.

A few simple rules and installation instructions must be followed if the bearings ever need to be replaced or removed during service.

The machine is set up with one set screw bearing and one Grip Tight bearing because the one Grip Tight bearing is all that is needed to securely hold the feedwheel shaft (along with the set screws on the opposite bearing). This also makes for very easy assembly. **When installing the bearing it is very important to install and lock the Grip Tight bearing first with the set screw bearing done after.** This is to keep the bearings from being put into a side load which will lead to premature failure.

Installation procedure:

1. Clean the feedwheel shaft of all debris, use a degreaser.
2. Install both feedwheel bearings on the feedwheel shaft with the Grip Tight bearing on the hydraulic motor side and the set screw bearing on the opposite side. **Do not lock the bearing on the shaft at this time, allow the feedwheel to shift freely for installation.**
3. Position the feedwheel in the yoke mount and install all (8) feedwheel bearing bolts with Loc-Tite 263 (red) applied. These are completely tightened and torqued at this time (refer to bolt torque chart).
4. The feedwheel then needs to be centered in the yoke and then it must be offset 3/16” (4.8 mm) towards the set screw bearing side (away from the hydraulic motor). The weight of the feedwheel needs to be taken off the bearing also.
5. First the Grip Tight bearing lock must be tightened by hand as tight as possible (in a clock wise direction). This is the zero reference point. Scribe a line on the lock nut above the adapter slot.
6. Using a spanner wrench or drift pin and hammer, lock the bearing to the shaft by tightening the lock nut in a clock wise direction. Tighten 3/4 to 1 full turn (you may need to block the feedwheel from turning at this time). Now you can tighten the set screws on the Grip Tight bearing. Note: the set screw is only to be tightened to 25 in.-lbs. (2 ft.-lbs.) (2.7 Nm).
7. Apply Loctite 263 (red) on the set screws of the set screw bearing and torque to 20 ft.-lbs. (27 Nm).

Grip Tight Bearing

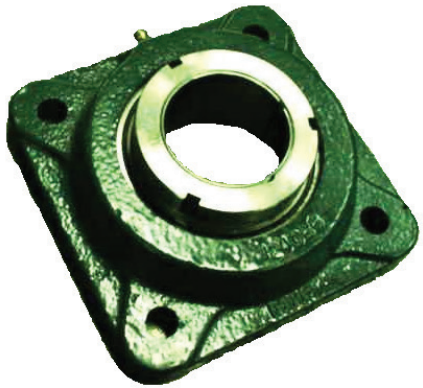

Set Screw Bearing

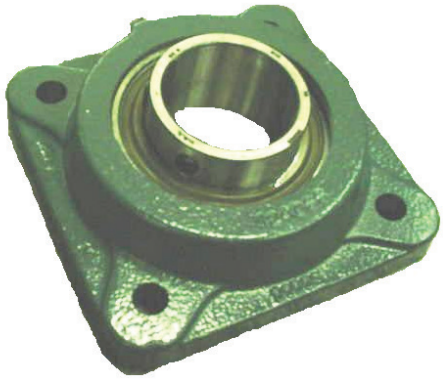

HYDRAULIC BUMP BAR

The bump bar should protrude approximately 1-1/4” (32 mm) from the infeed tray.

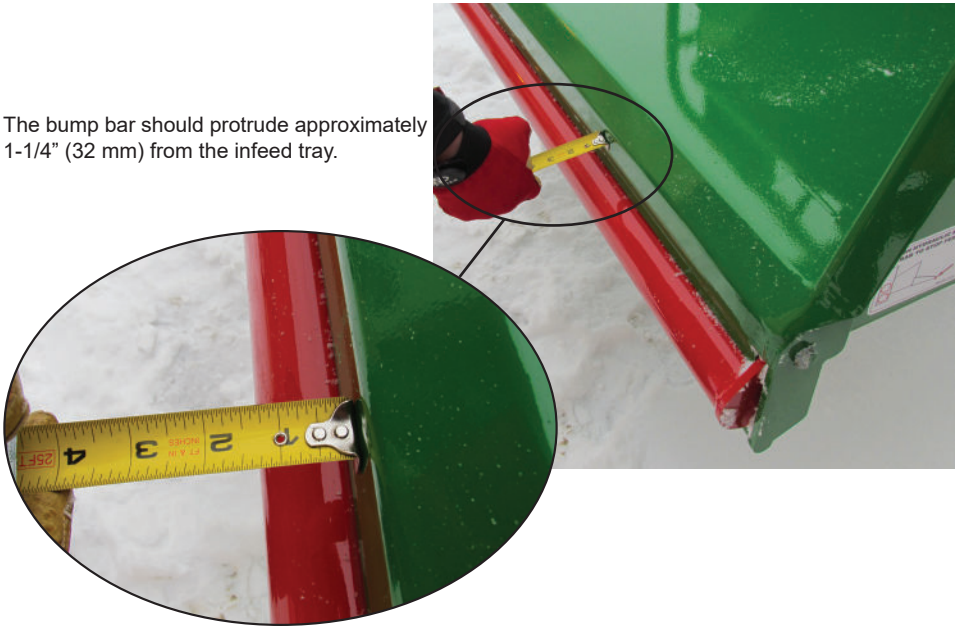

If these measurements are not within specifications, the bump bar needs to be checked for worn, loose, damaged, or broken parts. Repair or replace parts as needed and/or contact the nearest dealer or Bandit Industries for assistance.

Using a belt tension gauge, the bump bar should activate with approximately 25-30 lbs (11-14 kg).

HYDRAULIC BUMP BAR

Make sure the bump bar operates smoothly and without binding. Make sure the bump bar is free from all debris and nothing is jammed around or in behind the bump bar.

VIEW FROM THE BOTTOM SIDE OF THE TRAY WITH COVERS REMOVED

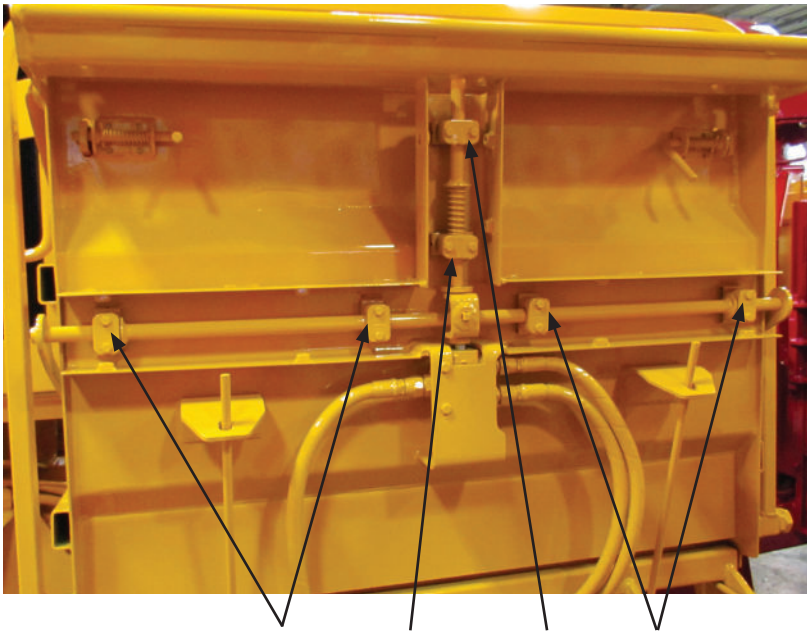

Lubricate the pivots points with a dry lube weekly or as needed.

EASY CLIMB FEED SYSTEM

⚠DANGER

Before attempting any type of maintenance, disengage clutch, wait for the disc/drum to come to a complete stop, turn off engine, remove the ignition key, make sure the ignition key is in your possession, install the disc/drum lock pin, and disconnect the battery.

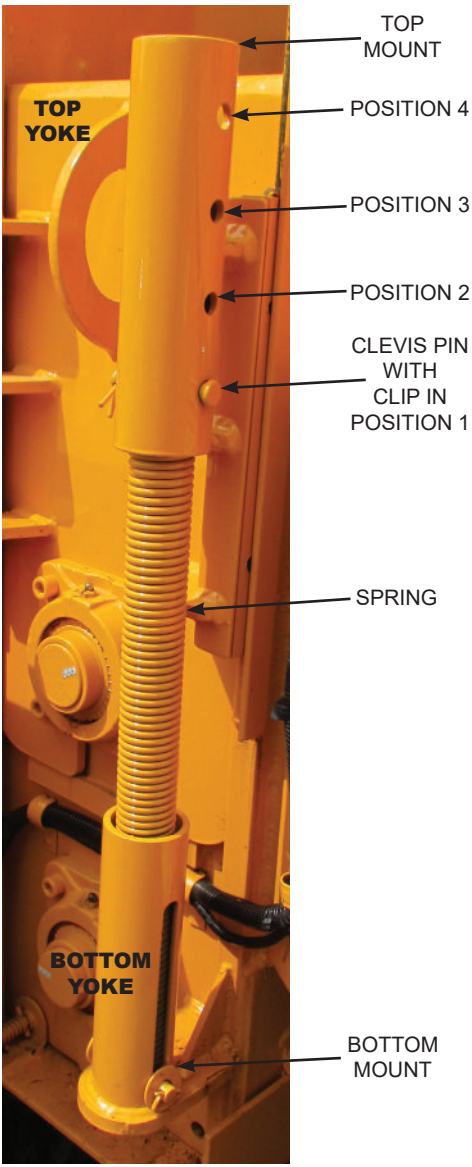

The Easy Climb System allows you to adjust the amount of spring tension put on the top feedwheel. The more spring tension you have the harder it will be for your top feedwheel to raise. More spring tension will keep the top feedwheel down on smaller brush material. The less spring tension you have the easier it will be for the top feedwheel to raise. Less spring tension allows the top feedwheel to raise, and climb over the larger diameter material. Additional spring tension requires more hydraulic yoke lift cylinder power to raise the top feedwheel. May require slight hydraulic relief valve adjustment.

There are four adjustment positions on the Easy Climb System. When adjusting spring tension have the top feedwheel in the lowered position. Use the Clevis Pin with Clip to adjust the tension. Make sure that the Clevis Pin is installed properly and that the Clip is secured tightly in place.

With the pin in position 1 the Easy Climb System will have approximately 6” (152 mm) of travel before you start spring tension. Use this position when chipping the maximum diameter material allowed by the chipper.

With the pin in position 2 the Easy Climb System will have approximately 4” (102 mm) of travel before you start spring tension. Use this position while chipping slightly smaller material than the maximum diameter material allowed by the chipper.

With the pin in position 3 the Easy Climb System will have approximately 2” (51 mm) of travel before you start spring tension. Use this position when chipping brush type material.

With the pin in position 4 the Easy Climb System will have approximately 0” of travel before you start spring tension. Use this position when chipping small brush type material.

ADJUST ACCORDINGLY AS SPRINGS STRETCH.

TIRE WEAR DIAGNOSTIC CHART

Wear Pattern		Cause	Action
	Edge Wear	• Under inflation	• Adjust pressure to particular load per tire catalog
	Side Wear	• Not hauling trailer level • Bent axles • Wide tires • Wheel bearings	• Must be hauled parallel to the ground • Replace as needed • Characteristic of wide flotation tires • Adjust or replace
	Cup Wear	• Out of balance wheel bearings	• Check bearing adjustment and balance tires • Adjust or replace
	Center Wear	• Over inflation	• Adjust pressure to particular load per tire catalog
	Flat Spots	• Wheel lock up and tire skidding	• Avoid sudden stops and adjust brakes

The wear pattern and tread life of tires involves many variables that the user has control of, but DOES NOT fall under faulty manufacture or design.

The following is a list of some causes supplied by tire suppliers and axle manufacturers:

- Misalignment - from rough roads, pot holes, excessive speeds and hitting curbs.
- Tire Width - the wider the tire for flotation, the more uneven the tire wear.
- Tire Air Pressure - to much or too little, for the load.
- Vehicle Hitch Height - if trailer is not level with ground, axle camber is misaligned.
- Maintenance - wheel bearing lubrication and adjustment. Follow axle MFG. instructions.
- Brakes - uneven or misadjusted brakes cause irregular brake activation.

RECOMMENDED BRAKE ADJUSTMENT PROCEDURE PER AXLE MANUFACTURER.

The proper clearance between the shoe and drum surfaces will be set up initially from our factory to assure proper operation during the normal break in period. No further adjustment will be necessary until the vehicle completes the recommended break in period of 200 miles (322 km).

Since all brakes of this type must be burnished or “run in” before their full effectiveness can be achieved, the MFG. maintenance manuals call for readjustment after the first 200 miles (322 km) of operation. This usually allows ample time for the burnishing to take place. Readjustments are not necessary for brakes fitted with self-adjustment features although periodic inspection is suggested.

NOTICE

Clearances that are too small will result in excessive drag and overheating while too much clearance can render the brake nonfunctional.

AXLE SIZE	SIZE	TYPE	DIAMETRAL CLEARANCE	CLICKS TO BACK OFF
7000 Lbs.	12 1/4” x 2.5”	Elec. or Hyd.	.040” (1 mm)	7 to 13
8000 Lbs.	12 1/4” x 2.5”	Elec. or Hyd.	.040” (1 mm)	Automatic Adjusting
10,000 Lbs.	12 1/4” x 3.38”	Elec. or Hyd.	.040” (1 mm)	Automatic Adjusting
12,000 Lbs.	12 1/2” x 5”	Elec. or Hyd.	.040” (1 mm)	Automatic Adjusting

For additional brake adjustment procedures consult the axle manufacturer manual.

For additional parts break downs and service videos go to www.dexteraxle.com

HYDRAULICS

WARNING

DO NOT GO NEAR LEAKS!

- Pressured oil easily punctures skin causing injury, gangrene or death.
- Seek immediate medical care.
- Do not use finger or skin to check for leaks.
- Remove hydraulic pressure or load before loosening fittings.
- Hydraulic components and oil may be hot. Allow sufficient time to cool.
- Avoid burns from fluid. Hot fluid under pressure can cause severe burns.

DANGER

LOCKOUT ALL ENERGY SOURCES BEFORE SERVICING OR REMOVING GUARDS OR HOODS!

1. **Shut off engine/motor. Key in possession.**
2. **Disengage pto/clutch.**
3. **Wait for cutter disc/drum to come to a COMPLETE STOP (takes at least several minutes).**
4. **Install disc/drum lock pin.**
5. **Loader arm (if equipped) securely on ground and hydraulic pressure released.**

6. **Unplug engine disable plug-in.**
7. **Remove padlock from hood pin.**
8. **Press down and hold hood spring lock pin (on disc chippers).**
9. **Retract hood pin.**

DO NOT RESTART UNTIL ALL GUARDS AND HOODS ARE SECURELY AND PROPERLY INSTALLED.

HYDRAULICS

⚠WARNING

It is very important after you have operated a new machine for approximately an hour to shut down the machine and recheck all hydraulic fittings. Relieve all pressure and retighten as needed.

DO NOT GO NEAR HYDRAULIC LEAKS! High pressure oil easily punctures skin causing serious injury, gangrene, or death. Avoid burns from fluid. Hot fluid under pressure can cause severe burns. DO NOT use fingers or skin to check for leaks. Lower load or relieve hydraulic pressure before loosening fittings. Relieve all pressure in the system before disconnecting the lines, hoses, or performing other work. Use a piece of cardboard to find leaks. Never use your bare hands. Allow system to cool down to ambient temperature before opening any coolant or hydraulic oil system.

In cold weather situations let your hydraulic system idle for approximately 15 minutes to allow the system to warm up to operating temperature.

⚠WARNING

DO NOT operate this machine unless all hydraulic control devices operate properly. They must function, shift and position smoothly and accurately at all times. Faulty controls can cause personal injury!

HYDRAULIC FLUID REQUIREMENTS

This machine is equipped with “Petro-Canada Hydrex XV” hydraulic fluid. It is recommended to replace with the same. “Petro-Canada Hydrex XV” is an all season hydraulic fluid. This is a premium performance, long life anti-wear, hydraulic fluid, designed for all season use in heavy duty hydraulic systems. “Petro-Canada Hydrex XV” allows year round use under wide extremes of temperature. It allows the hydraulic system to start at temperatures as low as -40°C/-40°F, under no load conditions and it improves lubrication of hydraulic components at high operating temperatures. It will also help protect against hydraulic failures during the wide temperature swings of spring and fall. To find the closest “Petro-Canada Hydrex XV” dealer call 1-888-284-4572.

Multi Viscosity motor oils are not recommended to mix with “Petro-Canada Hydrex XV” hydraulic oil. AW oils may mix with “Petro-Canada Hydrex XV” hydraulic oil. The following are specifications and authorizations of compatible oils. Only a high quality anti-wear (AW) hydraulic oil containing foam, corrosion, rust and oxidation inhibitors should be used. This viscosity grade depends on the oil temperature in service, based on the climate and operating conditions.

	Hydrex XV	ISO 22, AW	ISO 32, AW	ISO 46, AW	ISO 68, AW	ISO 100, AW
Viscosity Index	>235	>95	>95	>95	>95	>95
Flash Point	>240°C/464°F	>200°C/395°F	>210°C/410°F	>220°C/430°F	>220°C/430°F	>240°C/464°F
Oxidations Stability (ASTM D0943)	>9,000 Hours	>3,000 Hours	>3,000 Hours	>3,000 Hours	>3,000 Hours	>3,000 Hours
Cold Start-up, No Load, Max	-40°C/-40°F	-34°C/-29°F	-26°C/-14°F	19°C/-3°F	-9°C/16°F	-4°C/24°F

HYDRAULICS

Alternate hydraulic oils are available, but they do not equal the performance or longevity of the “Hydrex XV” oil. Consult the following information supplied by the oil distributor.

CELSIUS (C)	-40	-34	-29	-23	-18	-12	-7	-1	+4	+10	+16	+21	+27	+32	+38	+43	+49	+54
FAHRENHEIT (F)	-40	-30	-15	-10	0	+10	+20	+30	+40	+50	+60	+70	+80	+90	+100	+110	+120	+130

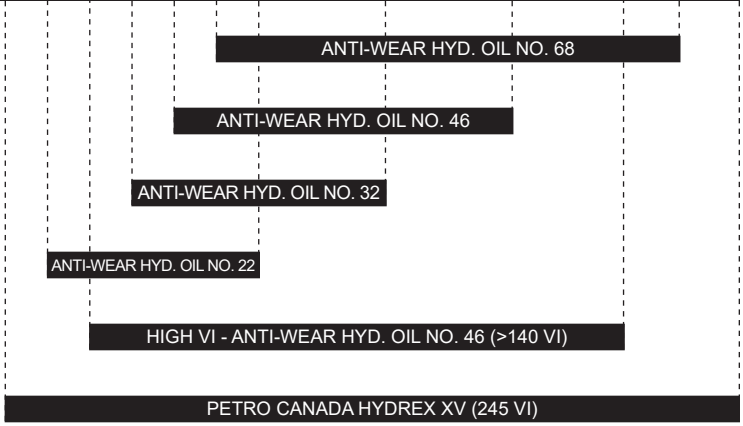

NOTICE

The above chart is a suggested guide for viscosity of hydraulic fluids at start up ambient temperature. The load, demand, and cleanliness of the equipment will affect actual oil temperatures which can increase dramatically above ambient air temperatures during operation. The actual viscosity needed is based on oil temperature during operation and not air temperature. Compare your fluid specifications with the specifications below to verify compliance.

When choosing a hydraulic fluid - these maximum and minimum specifications must be met:

Minimum Viscosity during operation = 12 cSt
Maximum No-Load Viscosity at start-up = 2000 cSt

Hydraulic fluids vary in their resistance to oxidation at elevated temperatures, their ability to protect against metal-to-metal contact under increasing temperature, and their ability to separate water from the fluid. Viscosity is temperature dependent. Fluids with high viscosity-index (VI) will thin out slower at higher temperature and thicken slower at colder temperatures allowing a wider operating range. Choose a fluid that has test results in these areas for best results.

Based on the varying temperatures of the area where Bandit equipment is used, and the high demand and loads placed on this equipment, Bandit has filled each hydraulic system with Petro-Canada’s Hydrex XV All Season Hydraulic Fluid for maximum protection and performance.

Go to: lubricants.petro-canada.com to find a dealer near you.

NOTICE

Some component manufacturers require different specific lubrication requirements, such as gear boxes, undercarriage drives, fluid engagement clutches, etc. Refer to the manufacturer’s manual for information.

HYDRAULICS

TYPICAL HYDRAULIC RELIEF PRESSURE SETTINGS
TYPICAL HYDRAULIC FLOWS AND RPM SETTINGS
(Approximate, For Reference Only, Engine At Full RPM)

Equipment Model	15XP/1390	15XP/1390 Track	
Pump GPM (LPM)	10.2 (38.6)	FEED 10.2 (38.6)	TRACK 23.4 (88.6)
Top Feedwheel GPM (LPM)	5.1 (19.3)	5.1 (19.3)	
Bottom Feedwheel GPM (LPM)	5.1 (19.3)	5.1 (19.3)	
Feedwheel RPM	35 - 37	35 - 37	
Main Relief PSI (bar)	2500 (172)	FEED 2500 (172)	TRACK 3500 (241)
Feed Relief PSI (bar)	2500 (172)	2500 (172)	
Yoke Relief PSI (bar)	1500 (103)	UP 2100 (145)	DOWN 1500 (103)
Winch Relief PSI (bar)	2200 (152)	2200 (152)	
Discharge Rotate PSI (bar)	500 - 800 (34 - 55)	900 (62)	
Discharge Flipper PSI (bar)	500 - 800 (34 - 55)	800 (55)	
Front Stabilizer PSI (bar)	2200 (152)	N/A	

NOTICE

DO NOT UNDER ANY CIRCUMSTANCES OVER-SET THESE RELIEF PRESSURES, BECAUSE IT WILL CAUSE DAMAGE TO COMPONENT PARTS AS WELL AS HYDRAULIC PARTS.

NOTICE

These typical hydraulic flows and relief pressure settings are with the engine at full RPM. All settings are subject to change!

⚠ CAUTION

After the initial start-up of the machine and after any replacement of hydraulic components, that fittings and hoses should be re-checked for leaks and clearances.

HYDRAULICS
THE BANDIT HYDRAULIC SYSTEM

The Bandit is equipped with a very efficient, simple hydraulic system. Each component is capable of withstanding a specified PSI (bar) and still operate for a very long time.

If the simple rules mentioned below are followed, the hydraulic components will last for years:

- After you have operated a new machine for approximately an hour shut down the machine and recheck all hydraulic fittings for tightness and leaks.
- Avoid hydraulic pump cavitation. Low oil levels or cold start-ups will cause the hydraulic pump to cavitate. Cavitation will ruin the pump and possibly the entire hydraulic system. Cavitation only has to happen once. This will start the pump on its way to ruin. Allow hydraulic system to turn slowly for several minutes in cold weather in order for hydraulic system to warm up. Cavitation is not covered under warranty.
- Do not increase the feedwheel relief valve settings beyond specified PSI (bar). This will cause damage to hydraulic components. Do not set any other hydraulic component past it's specified pressure or this will cause damage to the hydraulic components.
- Keep hydraulic oil clean. Dirty oil will cause excessive wear and loss of hydraulic power.
- Replace the hydraulic oil filter(s) after first 10 hours and with each 400 hours of operation or 3 months.
- Replace hydraulic oil & suction screen(s) at least once yearly. This is also a very good time to flush and clean the tank. Replace hydraulic oil immediately if it is contaminated or looks "milky". See pages 79 - 80 for hydraulic oil requirements.
- If the Bandit's hydraulic system is kept clean and the hydraulic pressures are not increased beyond the specified PSI (bar), the maximum use and life should be received from the Bandit chipper hydraulic system.
- If a problem is encountered, it will more than likely be located in the relief valve or something as simple as belts or clutch slipping, check these first.
- Only use the optional adjustable flow control when chipping large diameter trees. Do not leave the speed adjustment partially open for long periods of time. This will cause excessive heat to the hydraulic system! Excessive heat will cause low feedwheel power and premature failure of all hydraulic components. Always operate system at full oil flow unless chipping large diameter trees.
- Do not close the optional hydraulic shut-off valve for more than 3 to 4 seconds. Hydraulic shut-off valve handle must be completely turned on (in line with hose) at all times unless checking hydraulic pressure. Pressure gauge should be safely stored and installed only when checking pressure. Follow above instructions or this will cause unwarranted damage to the hydraulic components.
- Never close the ball valves on the hydraulic tank suction ports (if equipped) while the machine is running, this will ruin the hydraulic pump and components.
- Some component manufacturers require different specific hydraulic lubrication, such as gear boxes, undercarriage drives, etc. Refer to their manuals and maintenance section of this manual.

⚠ WARNING

DO NOT GO NEAR LEAKS!

- **Pressured oil easily punctures skin causing injury, gangrene or death.**
- **Seek immediate medical care.**
- **Do not use finger or skin to check for leaks.**
- **Remove hydraulic pressure or load before loosening fittings.**

⚠ CAUTION

After the initial start-up of the machine and after any replacement of hydraulic components, fittings and hoses must be re-checked for leaks and clearances.

HYDRAULICS

⚠WARNING

It is very important after you have operated a new machine for approximately an hour to shut down the machine and recheck all hydraulic fittings. Relieve all pressure and retighten as needed.

DO NOT GO NEAR HYDRAULIC LEAKS! High pressure oil easily punctures skin causing serious injury, gangrene, or death. Avoid burns from fluid. Hot fluid under pressure can cause severe burns. DO NOT use fingers or skin to check for leaks. Lower load or relieve hydraulic pressure before loosening fittings. Relieve all pressure in the system before disconnecting the lines, hoses, or performing other work. Use a piece of cardboard to find leaks. Never use your bare hands. Allow system to cool down to ambient temperature before opening any coolant or hydraulic oil system.

In cold weather situations let your hydraulic system idle for approximately 15 minutes to allow the system to warm up to operating temperature.

⚠WARNING

DO NOT operate this machine unless all hydraulic control devices operate properly. They must function, shift and position smoothly and accurately at all times. Faulty controls can cause personal injury!

NOTICE

Some equipment and components such as fluid engagement clutch's (PTO's) have their own lubrication requirements. Consult their manufactures manual for that information.

⚠DANGER

Before attempting any type of maintenance, disengage clutch, wait for the disc/drum to come to a complete stop, turn off engine, remove the ignition key, make sure the ignition key is in your possession, install the disc/drum lock pin, and disconnect the battery.

NOTICE

DO NOT UNDER ANY CIRCUMSTANCES OVER-SET THESE RELIEF PRESSURES, BECAUSE IT WILL CAUSE DAMAGE TO COMPONENT PARTS AS WELL AS HYDRAULIC PARTS.

NOTICE

These typical hydraulic flows and relief pressure settings are with the engine at full RPM. All settings are subject to change!

⚠CAUTION

After the initial start-up of the machine and after any replacement of hydraulic components, fittings and hoses must be re-checked for leaks and clearances.

NOTICE

When returning hydraulic components for warranty make sure to box up all warranted parts to avoid additional damage while shipping. **Do not disassemble any hydraulic components which are to be warranted.** Anything which has been disassembled or tampered with will not be warranted. Items being returned must be clean. All hydraulic components must have all hosing ports plugged. Failure to plug ports will allow debris to enter components which will void warranty.

YOUR BANDIT CHIPPER IS EQUIPPED WITH ONE OF TWO HYDRAULIC PRESSURE ADJUSTMENT PROCEDURE OPTIONS.

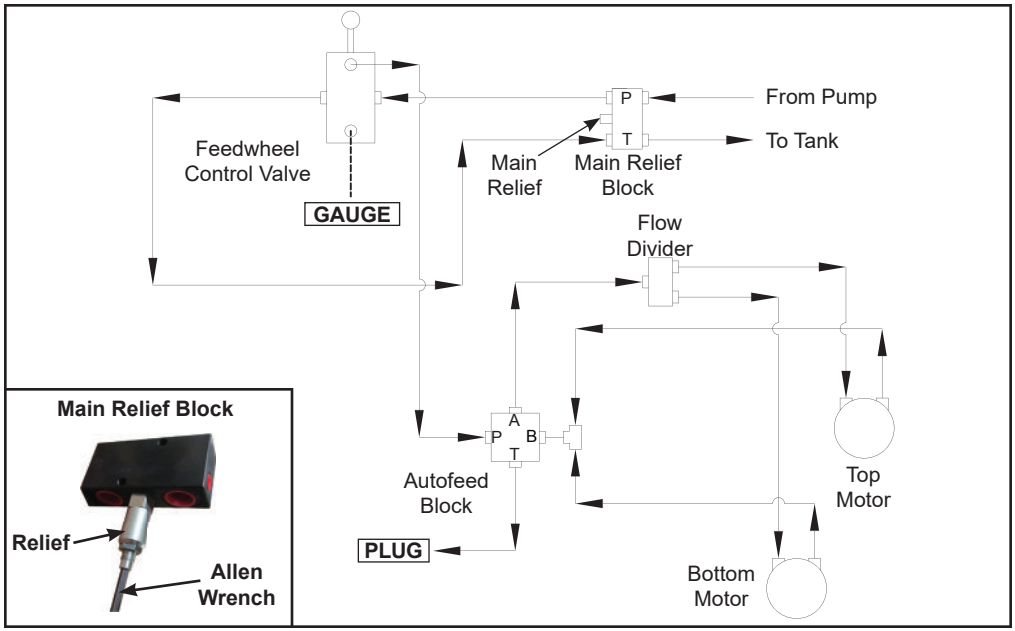

PROCEDURE 1 FOR MACHINES WITHOUT PRESSURE CHECK KIT

⚠WARNING

Before attempting any hydraulic pressure settings, make sure engine is shut off, engine key removed and in your possession, hydraulic oil is clean, hydraulic tank is 3/4 to 7/8 full, and the machine has been pre-run to warm the hydraulic oil. To correctly check relief valve pressure, gauge MUST be installed correctly.

1. First put the control bar in the off position.
2. Disconnect the autofeed block from the control valve and plug the port on the autofeed block. If your machine has only one feedwheel, disconnect the hydraulic hose going from the control valve to the feedwheel motor at the feedwheel control valve end and plug the end of the hose.
3. Leave all other hydraulic hoses connected.
4. Install pressure gauge in port on the control valve from which the autofeed block or hose was disconnected.
5. Start engine with the control bar in the off position.
6. Adjust engine to full throttle.
7. Engage control bar to the normal operating position to activate a reading on the pressure gauge.
8. Pressure gauge should read maximum specified PSI (bar).
   ONLY ENGAGE CONTROL BAR FOR 4-5 SECONDS TO SET PRESSURE OR YOU MAY DAMAGE HYDRAULICS.
9. Locate relief next to autofeed solenoid, loosen jam nut, use an allen wrench to readjust relief pressure setting if needed, and then retighten jam nut.
10. Reassemble autofeed block or hose to control valve.
11. Check for hydraulic leaks.
12. Relief valve pressure should be checked and/or readjusted every month for best performance.

MAINTAIN FEEDWHEEL HYDRAULIC PRESSURE AT SPECIFIED PSI (bar).

YOUR BANDIT CHIPPER IS EQUIPPED WITH ONE OF TWO HYDRAULIC PRESSURE ADJUSTMENT PROCEDURE OPTIONS.

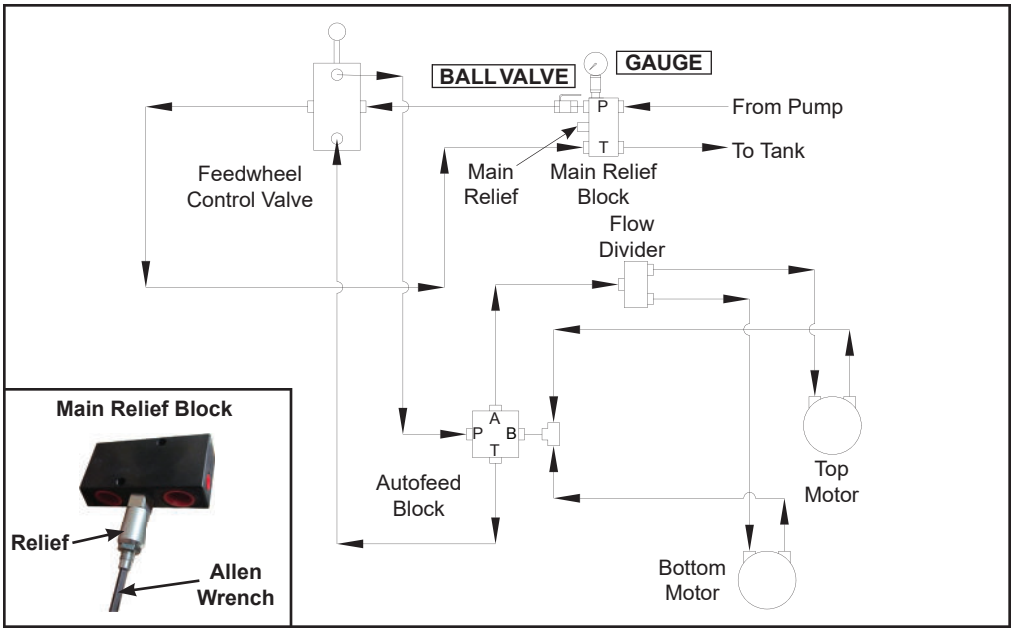

PROCEDURE 2 FOR MACHINES WITH PRESSURE CHECK KIT

⚠WARNING

Before attempting any hydraulic pressure settings, make sure engine is shut off, engine key removed and in your possession, hydraulic oil is clean, hydraulic tank is 3/4 to 7/8 full, and the machine has been pre-run to warm the hydraulic oil. To correctly check relief valve pressure, gauge MUST be installed correctly.

1. First put the control bar in the off position.
2. Install pressure gauge on the test nipple that is on the main relief.
3. Start engine with the control bar in the off position.
4. Adjust engine to full throttle.
5. Close the ball valve.
6. Pressure gauge should read maximum specified PSI (bar).
   ONLY CLOSE BALL VALVE FOR 4-5 SECONDS TO SET PRESSURE OR YOU MAY DAMAGE HYDRAULICS.
7. Locate the relief on the main relief block, loosen jam nut, use an allen wrench to readjust relief pressure setting if needed, and then retighten jam nut.
8. Remove the pressure gauge and place the rubber cap back on the test nipple.
9. Check for hydraulic leaks.
10. Relief valve pressure should be checked and/or readjusted every month for best performance.

MAINTAIN FEEDWHEEL HYDRAULIC PRESSURE AT SPECIFIED PSI (bar).

PROCEDURE FOR CHECKING OPTIONAL HYDRAULIC COMPONENTS

The relief valve is typically located internally in the control valve. Do not adjust this relief valve above 2500 PSI (172 bar). The relief valve system is a simple spring tension design but small pieces of debris can stick the valve partially open which weakens the feedwheel power. The relief as well as hydraulic oil, and screen must be kept clean.

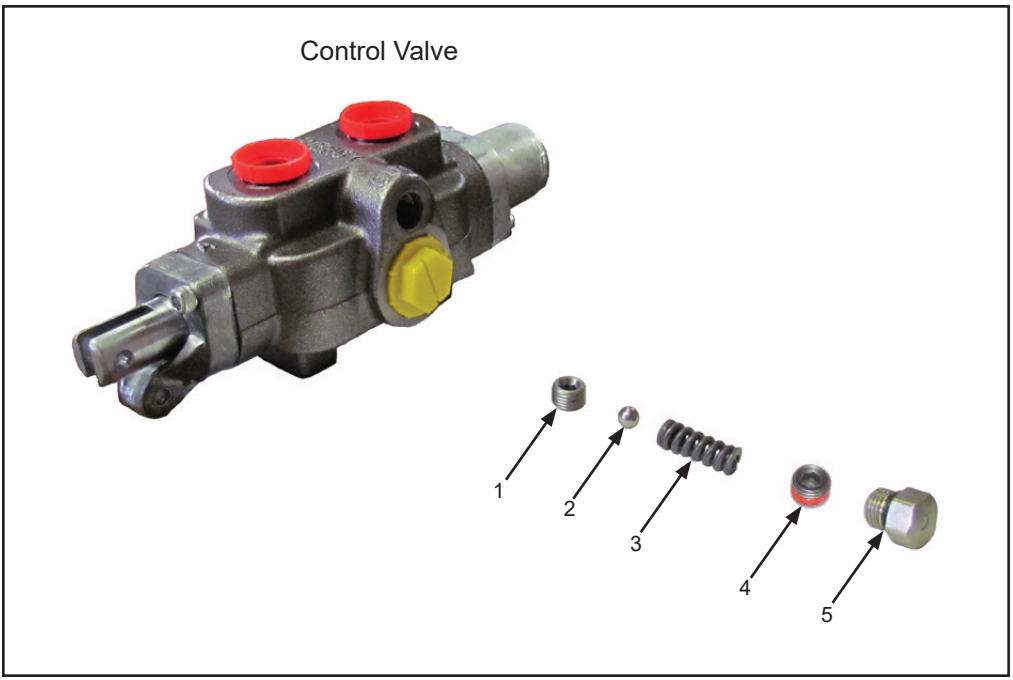

1. **VALVE SEAT:**
   The springs pushes the relief valve ball against it, until pressure builds.
2. **POPPIT VALVE:**
   This ball opens and closes to relieve excess pressure on hydraulic system.
3. **RELIEF SPRING:**
   This spring tensions the amount of pressure required to open the relief valve ball. This spring weakens and must be checked and/or readjusted every month for best performance.
4. **ALLEN SET SCREW:**
   Turn clockwise using a 1/4” allen wrench to increase pressure, but do not surpass maximum of the specified PSI (bar). Previous valves require 7/32” allen wrench or a flat head screw driver.
5. **HEX HEAD PLUG:**
   Remove to access the relief valve.

PROCEDURE FOR CHECKING OPTIONAL HYDRAULIC COMPONENTS

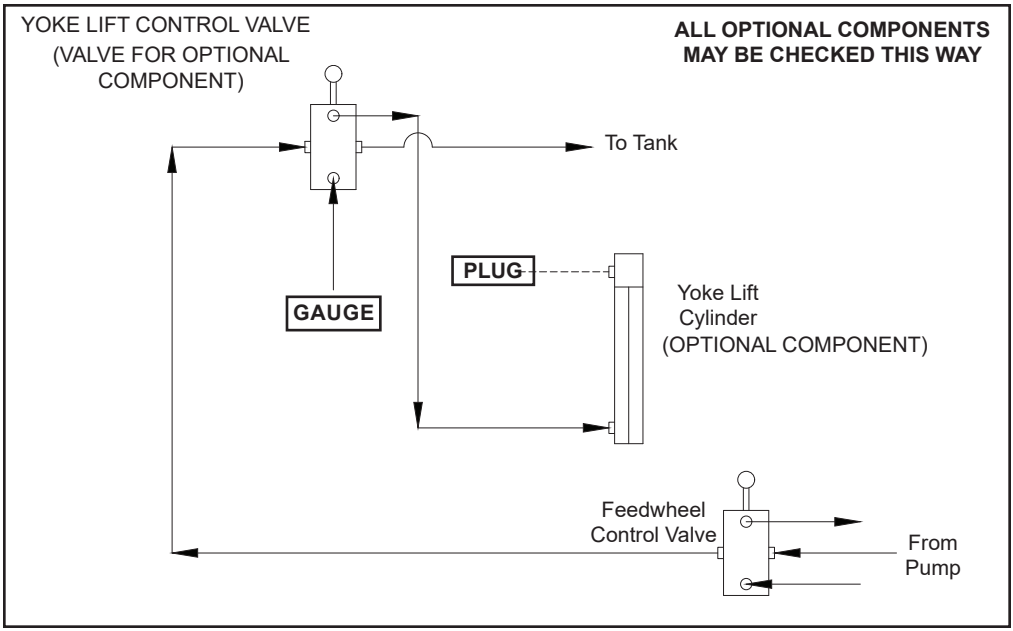

⚠WARNING

Before attempting any hydraulic pressure settings, make sure engine is shut off, engine key removed and in your possession, hydraulic oil is clean, hydraulic tank is 3/4 to 7/8 full, and the machine has been pre-run to warm the hydraulic oil. To correctly check relief valve pressure, gauge MUST be installed correctly.

1. First put control bar in off position.
2. Disconnect hose coming out of the port farthest from the handle of the control valve from the optional motor or cylinder, and plug the hose.
3. Leave all other hydraulic hoses connected.
4. Install pressure gauge in the valve port which had the hose of the optional motor or cylinder disconnected.
5. Start engine with the control bar in the off position.
6. Adjust engine to full throttle.
7. Only operate the valve for that component to activate pressure gauge. Pressure gauge should read the maximum specified PSI (bar) for that component.
   ONLY OPERATE VALVE FOR 4-5 SECONDS TO SET PRESSURE OR YOU MAY DAMAGE HYDRAULICS.
8. Readjust relief pressure setting if needed, if not needed, shut off engine and remove plug and pressure gauge. Reassemble control valve to optional motor or cylinder.
9. Check for hydraulic leaks.
10. Relief valve pressure should be checked and/or readjusted every month for best performance.

MAINTAIN HYDRAULIC PRESSURE AT SPECIFIED PSI (bar).

HYDRAULIC SYSTEM TROUBLE SHOOTING

Before attempting any type of maintenance, disengage clutch, wait for the disc/drum to come to a complete stop, turn off engine, remove the ignition key, make sure the ignition key is in your possession, install the disc/drum lock pin, and disconnect the battery.

PROBLEM	POSSIBLE CAUSE	SOLUTION
Feedwheel(s) turn at normal speed but does not chip wood properly.	Dull knives.	Replace knives
	Worn feed teeth	Replace
	Low feedwheel relief valve setting	Readjust to specified PSI (bar)
	Pump is worn	Replace
	Motor is weak	Replace
	Feedwheel springs too loose	Adjust
	Clutch / belts out of adjustment	Adjust
	Engine not running at full RPMs	Adjust
Feedwheel(s) slow or stop when feeding	Dull knives	Replace knives
	Relief valve is worn or dirty	Clean, reset, or replace
	Pump is worn	Replace
	Motor is worn	Replace
	Feedwheel springs too tight	Adjust
	Feedwheel slide box sticking or hanging up	Lubricate
Feedwheel(s) turn slowly or not at all	Relief valve stuck open	Clean or replace
	Worn hydraulic motor	Replace
	Pump is worn	Replace
	Feedwheel relief pressure not correct	Reset to specified PSI (bar)
	Pinched or damaged hydraulic hose	Replace
	Feedwheel valve (control valve) worn & leaking internally	Replace
	Autofeed dump valve stuck open	Lightly tap on dump block, remove & clean, or replace
	Low hydraulic oil level	Fill to 3/4” to 7/8” full minimum
	Plugged oil screen	Replace
	Binding such as worn bearings, etc.	Repair
	Control lever improperly shifting valve	Readjust, valve must open completely
Hydraulic oil very hot, causing system to operate slowly	Dull knives	Replace knives
	Low oil level	Fill 3/4” to 7/8” full minimum
	Pump is worn	Replace
	Relief valve stuck open or opens easily	Clean, reset, or replace
	Damaged hose	Replace
	Oil suction screen or filter plugged	Clean or replace
	Oil cooler plugged (if equipped)	Clean
	Motor is worn	Replace
	Binding	Repair
	Operator running oil over relief too much	DO NOT DO THIS
	Flow control is on for too long	Open flow control

MAINTAIN FEEDWHEEL HYDRAULIC PRESSURE AT SPECIFIED PSI (bar)

Follow typical hydraulic flow and relief settings on pages 81 - 87.

Follow proper hydraulic oil requirements on pages 79 - 80.

CORRECTING HYDRAULIC PROBLEMS

Before attempting any type of maintenance disengage clutch, turn off engine, wait for the disc/drum to come to a complete stop, install the disc/drum lock pin, disconnect battery, and make sure the ignition key is in your possession!

COMPONENT	PROCEDURE
Checking relief valve setting	1. Refer to the hydraulic pressure adjustment procedure section of the manual to find the correct procedure for checking relief valve setting (pages 84 - 87).
Adjusting relief valve setting	1. Refer to the hydraulic pressure adjustment procedure section of the manual to find the correct procedure for adjusting relief valve pressure settings. (pages 84 - 87)
Cleaning relief valve (with engine shut off)	1. Remove plug from feedwheel valve (control valve), see illustration of relief valve components. (page 86) 2. Unscrew slotted set screw completely out of the valve. 3. Remove poppit spring. 4. Remove poppit ball. 5. Clean all parts, inspect for damage and blow out relief hole with air. 6. Reassemble, set and maintain feedwheel hydraulic pressure at specified PSI (bar).
Checking for defective pump	1. See pages 90 - 91 on how to check a hydraulic pump.
Checking for defective motor	1. If everything checks out as correct, it may be time to check the hydraulic motor. 2. If your machine has Live Hydraulics, see page 92 on how to check a hydraulic motor. 3. If your machine does not have Live Hydraulics, contact your local dealer or Bandit Industries for instructions.

NOTICE

When returning hydraulic components for warranty make sure to box up all warranted parts to avoid additional damage while shipping. **Do not disassemble any hydraulic components which are to be warranted.** Anything which has been disassembled or tampered with will not be warranted. Items being returned must be clean. All hydraulic components must have all hosing ports plugged. Failure to plug ports will allow debris to enter components which will void warranty.

MAINTAIN FEEDWHEEL HYDRAULIC PRESSURE AT SPECIFIED PSI (bar)

Follow typical hydraulic flow and relief settings on pages 81 - 87.

Follow proper hydraulic oil requirements on pages 79 - 80.

HYDRAULIC PUMP CHECK OUT

HYDRAULIC PUMP CHECK WITHOUT USING A FLOW METER

To check out the hydraulic pump the mechanic will need a needle type control valve, a pressure gauge capable of reading 3000 psi (207 bar), an in-line 2500 psi (172 bar) relief, and a hose long enough to span between the pump and the hydraulic tank.

1. Disconnect the pressure line going from the pump at the first component and cap the fitting at the component.
2. Attach a Tee fitting to the end of the pressure hose (which was removed from the component) and install the Tee fitting and gauge.
3. Attach an in-line 2500 psi (172 bar) relief to the Tee fitting with the gauge.
4. Attach the hydraulic flow control valve to the in-line relief and the hose (you supply) to the outlet port of the flow control valve.
5. **Make sure the pressure gauge is installed up stream from the flow control valve. Failure to do this will cause serious damage to the hydraulic pump when testing.**
6. If the hydraulic oil tank is equipped with a mesh strainer in the fill neck, remove it and place the open end of the hose (you supply) into the tank fill neck.
7. **MAKE SURE THAT THE FLOW CONTROL VALVE IS FULLY OPEN SO AS TO ALLOW UNRESTRICTED FLOW TO PASS THROUGH IT.**
8. Start the engine to engage the pump, the clutch may have to be engaged if the pump is belt driven.
9. Have a second person lift the hydraulic hose far enough out of the tank inlet to observe the flow of oil going into the tank. Observe the pressure gauge reading to make sure a high pressure does not exist.
10. Increase the engine speed slowly to full rpm and at the same time observe the pressure. This should still remain low.
11. **SLOWLY** turn the needle valve on the flow control in and observe the pressure increase on the pressure gauge.
12. Continue closing the flow control valve until the pressure gauge reading reaches 90% of the normal relief valve setting (example: if system operates at 2500 psi (172 bar), do not exceed 2250 psi (155 bar). **Never allow the pressure to go more than 90% of the main relief pressure.**
13. If the pump is good there should be no noticeable decrease in the flow rate coming out of the hose and into the hydraulic tank.
14. If 90% of the main relief pressure can not be obtained and/or the flow rate of the hose is considerably less, then the pump is worn or damaged.

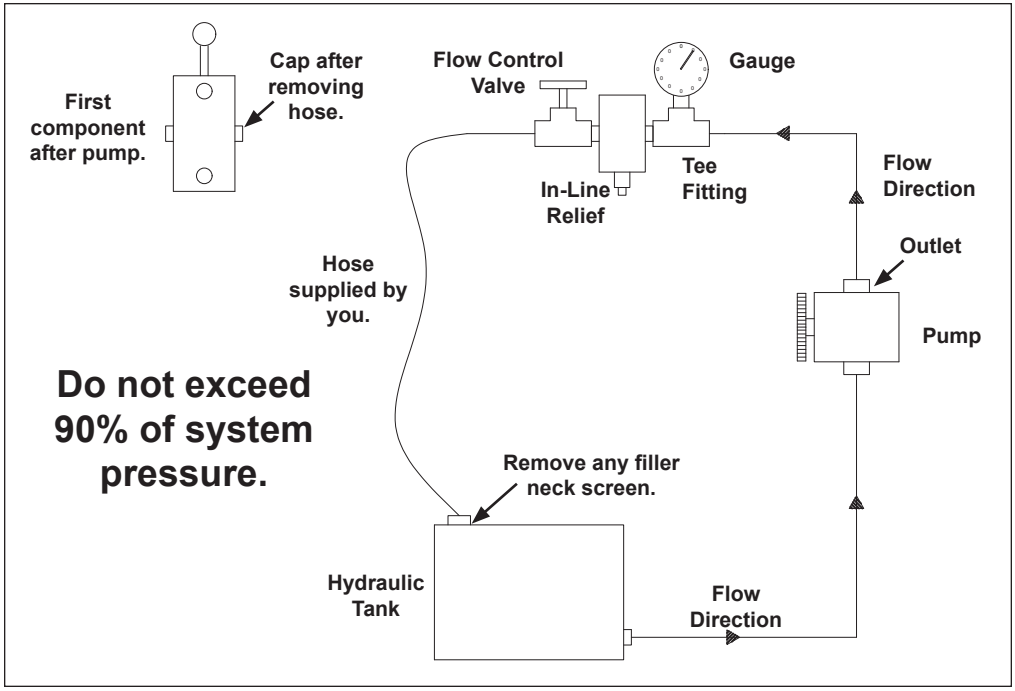

HYDRAULIC PUMP CHECK OUT

HYDRAULIC PUMP CHECK OUT USING A FLOW METER (WITH RELIEF)

To check out the hydraulic pump the mechanic will need a needle type flow meter capable of reading 3000 psi (207 bar) and a long enough hose that will go from the flow meter back to the first component.

1. Disconnect the pressure line going from the pump at the first component.
2. Attach the flow meter to the end of the pressure hose (which was removed from the component).
3. Attach the hose you supplied to the outlet of the flow meter and run the hose back to the first component. **MAKE SURE THE HOSES ARE ON THE CORRECT SIDES OF THE FLOW METER.**
4. **Make sure the pressure gauge is installed up stream from the flow control valve. Failure to do this will cause serious damage to the hydraulic pump when testing.**
5. **MAKE SURE THAT THE FLOW CONTROL VALVE IS FULLY OPEN SO AS TO ALLOW UNRESTRICTED FLOW TO PASS THROUGH IT.**
6. Start the engine to engage the pump, the clutch may have to be engaged if the pump is belt driven.
7. Observe the flow rate through the meter and pressure gauge reading to make sure a high pressure does not exist.
8. Increase the engine speed slowly to full rpm and at the same time observe the pressure and flow rate. The pressure should still remain low. Make a note of the flow rate (gpm or Lpm) at full engine rpm.
9. **SLOWLY** turn the needle valve on the flow control in and observe the pressure increase on the pressure gauge.
10. Continue closing the flow control valve until the pressure gauge reading reaches 90% of the normal relief valve setting (example: if system runs at 2500 psi (172 bar), do not exceed 2250 psi (155 bar). **Never allow the pressure to go more than 90% of the main relief pressure.**
11. If the pump is good, you should have at least 80% of the flow rate (gpm or Lpm) passing through the flow meter as noted at low pressure and full rpm (example: 10 gpm (38 Lpm) and low pressure = 8 gpm (30 Lpm) at 90% pressure).
12. If 90% of the main relief pressure can not be obtained and/or the flow rate passing through the meter is considerably less, then the pump is worn or damaged.

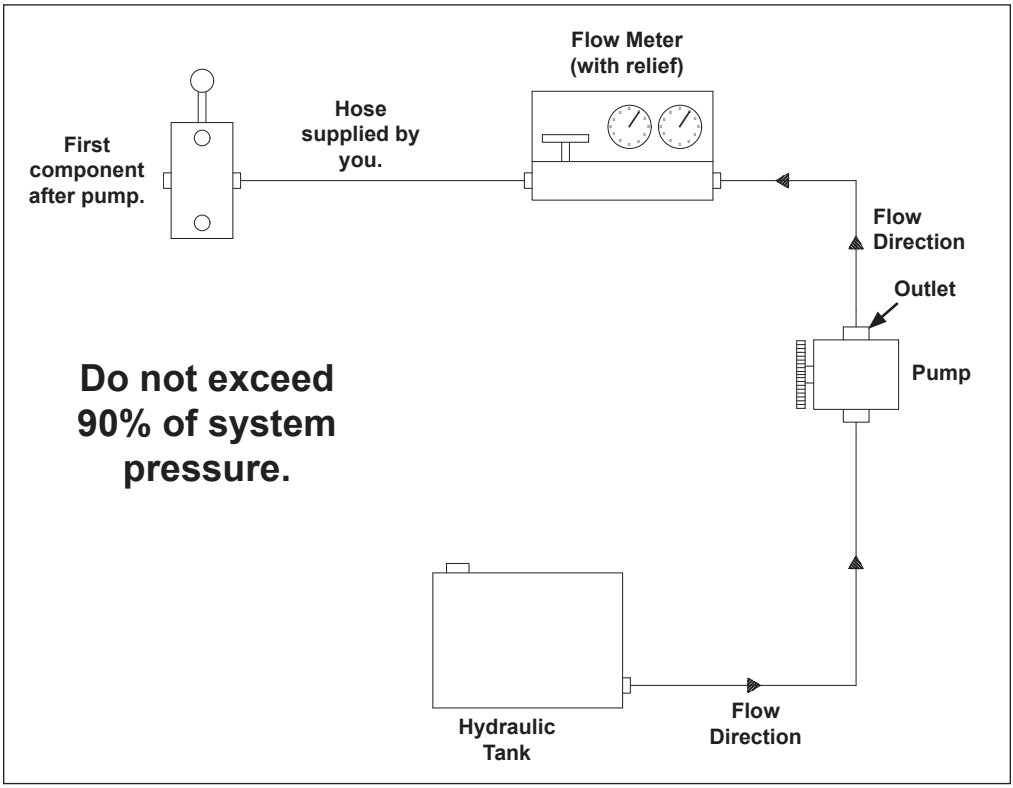

HYDRAULIC MOTOR CHECK OUT

HYDRAULIC MOTOR CHECK OUT FOR MACHINES WITH LIVE HYDRAULICS

To check out the hydraulic motor the mechanic will need a pressure gauge capable of reading 3000 psi (207 bar), a Tee fitting to install to the control valve, a plug fitting to install in the control or relief valve, and a clean 5 gallon (19L) pail.

1. The following instructions are for machines with Live Hydraulics, for machines without Live Hydraulics contact your local dealer or Bandit Industries.
2. In order to check out a hydraulic motor, it is necessary to mechanically stop the motor from turning while under load. The hydraulic pump needs to be driven without turning the chipper disc/drum (Live Hydraulics). Feed a reasonably large size log into the machine until it contacts the stationary disc/drum. This should stall the hydraulic motor(s). It may also be necessary to apply down pressure by operating the yoke control valve (if equipped).
3. With the feedwheel(s) mechanically locked as described, turn the engine off and keep the key in your possession. If the hydraulic motor does not have a case drain, unhook the hose going from the hydraulic motor back to the control valve at the valve, some machines will be equipped with a flow divider between the hydraulic motor and the control valve. If the hydraulic motor has a case drain, unhook the case drain hose that goes to the relief valve at the valve and put the hose into the hydraulic tank.
4. Place the end of the hose in a clean 5 gallon (19L) pail.
5. Plug the open port of the control valve or main relief valve.
6. Unhook the other hose in the control valve and install a Tee fitting into the control valve and attach the hose to the Tee fitting.
7. Install a pressure gauge in the other port in the Tee fitting to monitor hydraulic pressure.
8. Put the infeed control valve in the center position and start the engine.
9. Increase the engine speed slowly to full rpm.
10. Operate the infeed control valve to feed the log into the stationary disc/drum. If the feedwheel(s) try to turn, apply down pressure by using the yoke control valve (if equipped).
11. Providing the pump and the relief are functioning properly, the pressure gauge should read the specified main relief setting.
12. Observe the amount of hydraulic fluid coming from the hose into the pail. If the amount of leakage in the pail is 1 g.p.m. (3.8 L.p.m.) or less the motor is good. If the amount of leakage in the pail is over 1 g.p.m. (3.8 L.p.m.) the motor needs to be replaced.

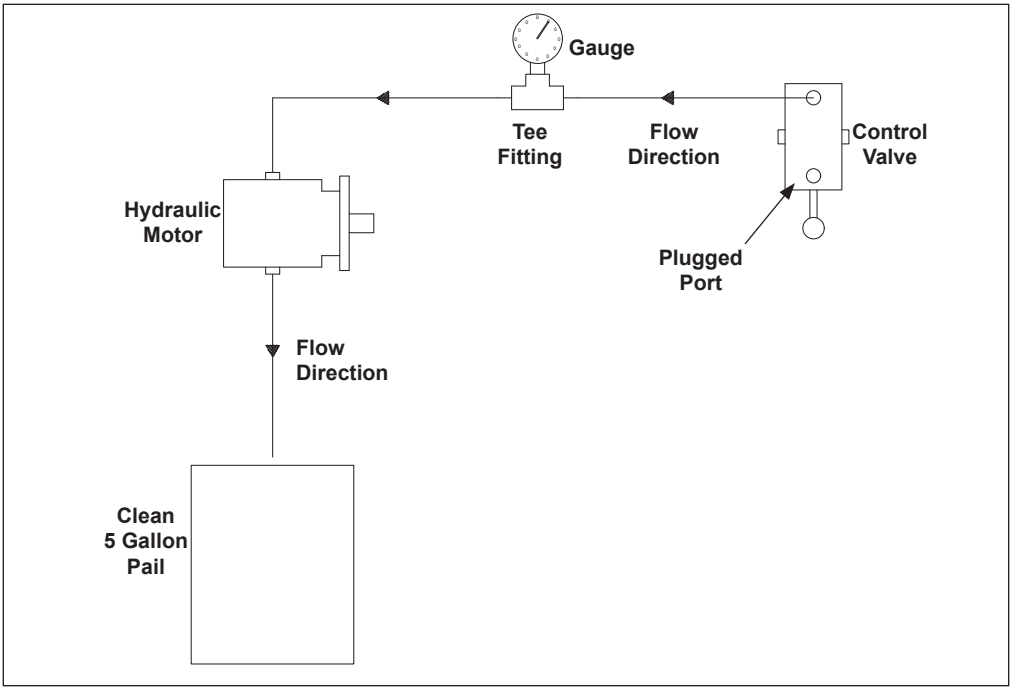

CONTROL VALVE DETENT ASSEMBLY AND O-RING REPLACEMENT

Tools Required:
- Small amount of clean hydraulic oil
- Clean working area, free of debris and shop rags
- 3/16” Tee handle hex driver
- 3/4” drag link drive socket
- Jawed vice

3/4” Drag Link Drive Socket

GENERAL PROCEDURE:

Disassembly:

1. Secure valve in vice or suitable method to firmly hold valve.
2. Note the orientation and placement of all components during disassembly.
3. Using the 3/16” Tee handle hex driver, remove (2) two socket head cap screws which hold the spring cover to the valve body. Set aside for re-use.
4. The detent assembly is now visible. Insert the 3/4” drag link drive socket blade into slot of retaining screw. Loosen and remove the retaining screw along with the entire detent assembly.
5. With the 3/16” Tee handle hex driver, remove (2) two socket head cap screws that hold the control lever assembly to the valve body.
6. Detach hand lever from spool. Carefully remove the spool from the valve body. Take care not scratch, dent, or nick the spool. Note the orientation of handle attachment point on spool. Set aside for re-use.
7. Remove (2) two seal retainers, o-rings, and back-up rings from both ends of the valve.
8. Inspect and replace o-ring and back-up ring if cut, or if leak is suspected.

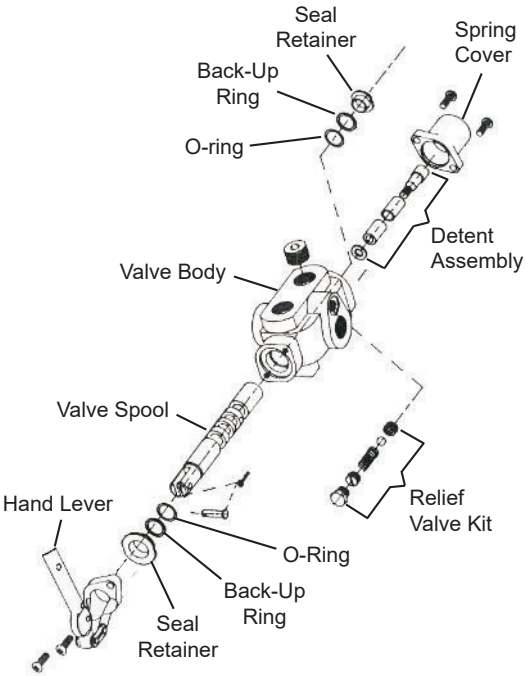

Assembly:

1. Lubricate spool, o-rings, and back-up rings with clean oil. Insert spool and center it in the valve body.
2. Place the new o-rings and back-up rings over spool ends and seat them into the valve body. Seat the seal retainer onto back-up ring making sure not to pinch the o-ring or back-up ring against the valve body.
3. Re-attach the hand lever to the spool. Mount control lever assembly onto the valve body using (2) two socket head cap screws. Apply Loctite 243 (blue) to the screws.
4. Thread a new detent assembly onto the spool end and hand tighten to 72 in-lbs (8 Nm) with the 3/4” drag link drive socket blade. No additional lubricant is required.
5. Mount the spring cover and the (2) two socket head cap screws. Apply Loctite 243 (blue) to the screws.
6. Hand tighten all (4) four socket head cap screws with the 3/16” Tee handle hex driver.
7. Shift valve with hand lever to assure operation. With some effort, the hand lever should move between three positions. The detent will hold the hand lever in the three positions.

Instructions and illustrations provided by component manufacturer.

TYPICAL ELECTRICAL WIRING DIAGRAMS

WIRING FOR STANDARD 6 PRONG PLUG AND 6 WIRE MAIN CABLE EFFECTIVE ON MACHINES BUILT AFTER 11/01/04

6 Wire Main Cable Color Code
Red R (Brakes & Breakaway Switch)
White W (Ground)
Green G (Right Turn)
Yellow Y (Left Turn)
Brown BR (Running Lights)
Black BL (Power to Breakaway Switch)

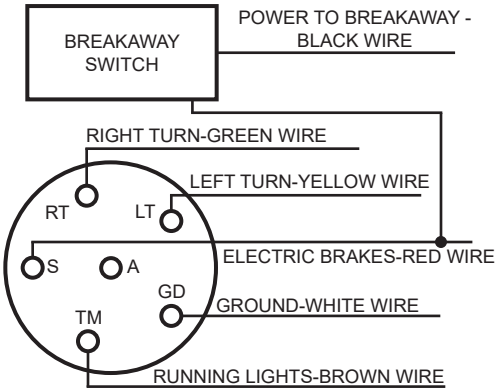

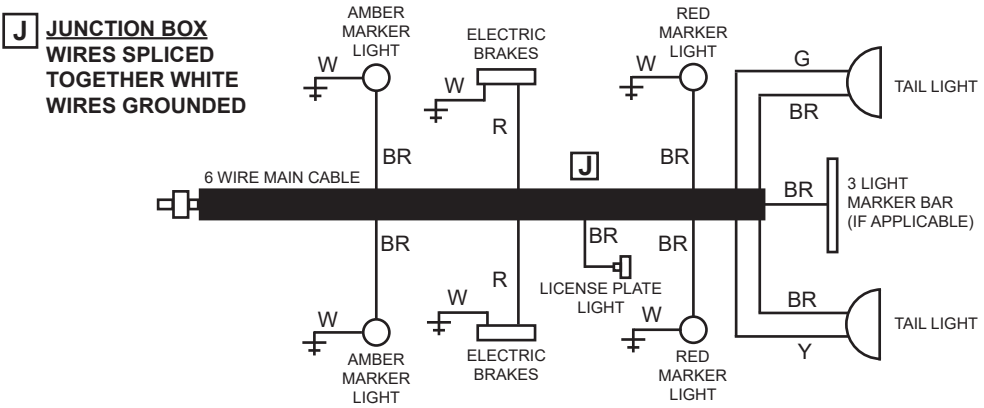

JUNCTION BOX

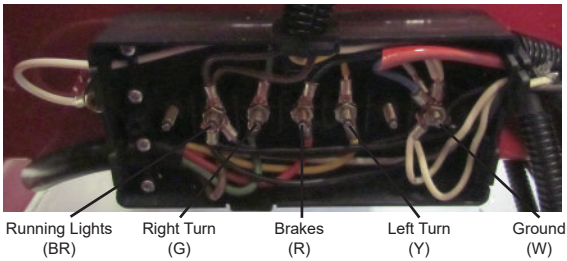

6 WIRE MAIN CABLE COLOR CODE (OLD STYLE)

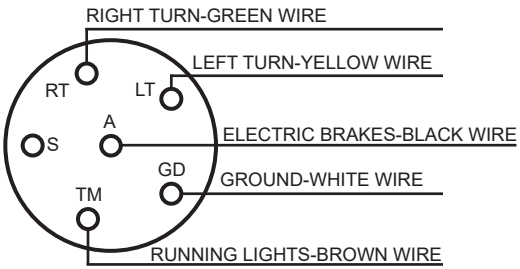

OLD STYLE

6 Wire Main Cable Color Code
Black BL (Brakes)
White W (Ground)
Green G (Right Turn)
Yellow Y (Left Turn)
Brown BR (Running Lights)
Red R (Breakaway Switch)

REPLACEMENT PARTS SECTION

Depending on what replacement parts you are ordering
the following information will be needed:

CHIPPER COMPONENTS
Serial Number
Model Number of Chipper

ENGINE COMPONENTS
Brand
Engine Serial Number
Engine Spec. Number

CLUTCH COMPONENTS
Brand
Serial Number
Assembly Number of Clutch

NOTICE

When ordering any replacement parts you should have the serial number (S/N) and model of the machine to ensure that you receive the correct replacement part. See page 6 for typical serial number & work order number locations.

NOTICE

All nuts, bolts, washers, and many other components can be ordered by physical description.

NOTICE

Some of the components shown in this section are for optional equipment and may not apply to every machine.

NOTICE

Bandit Industries Inc. reserves the right to make changes in models, size, design, installations and applications on any part without notification.

MACHINE ORIENTATION REFERENCE

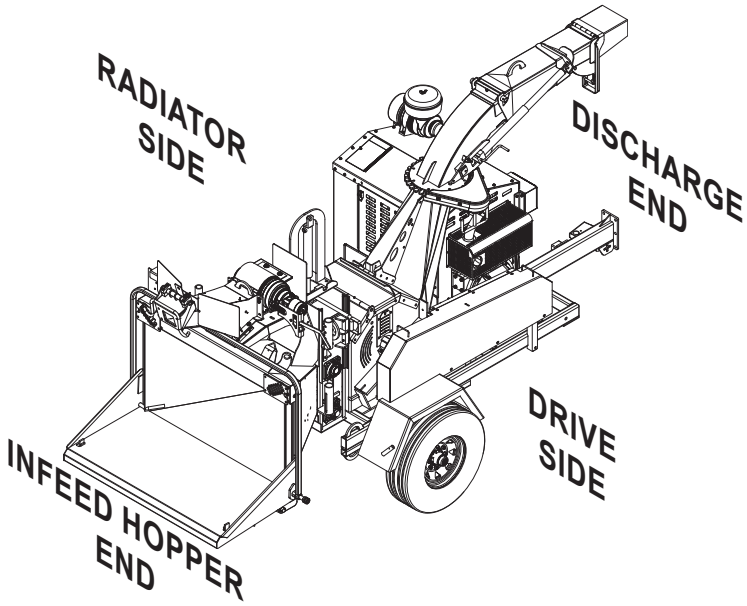

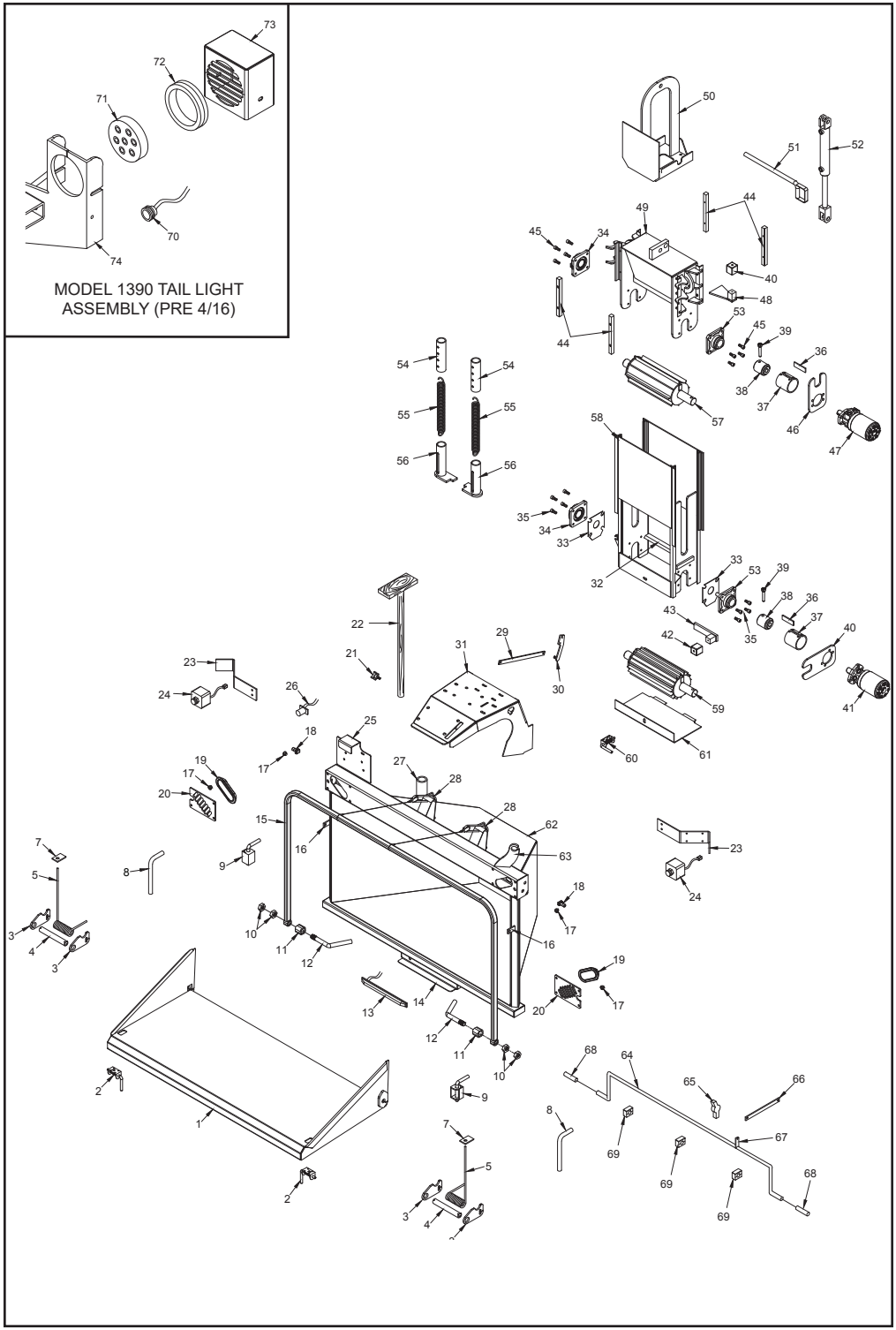

NOTICE Parts may not be exactly as shown.

LOCATION	PART NUMBER	DESCRIPTION
1. a.	912-1001-42	Folding Tray For Infeed Hopper (Includes 2 - 7 & 9 - 12)
b.	912-200002	Folding Tray For Infeed Hopper
2. a.	900-4904-90	Folding Tray Spring Lock - 3/4” Diameter Pin
b.	900-7900-96	Rubber Cap For Spring Lock - 3/4” Diameter (Not Shown)
3.	980-300320	Spring Mount for Spring Assist - 2” x 3” Rim
4. a.	980-3011-43	Spring Tube For Spring Assist
b.	900-4905-45	Cotter Pin For Spring Tube (Not Shown)
5. a.	900-4917-77	Right Spring For Spring Assist (Start 12/14)
b.	900-4905-40	Right Spring For Spring Assist (Pre 12/14)
c.	911-100003	Spring Assist Kit - Specify Left Side or Right Side (Includes 3 - 7)
6. a.	900-4917-76	Left Spring For Spring Assist (Start 12/14)
b.	900-4905-39	Left Spring For Spring Assist (Pre 12/14)
c.	911-100003	Spring Assist Kit - Specify Left Side or Right Side (Includes 3 - 7)
7.	980-0133-34	Top Spring Block (Specify Length 1 1/2” or 2 1/2”)
8. a.	955-300086	Folding Tray Lock Pin (Pre 5/13)
b.	900-7900-96	Rubber Cap For Lock Pin (Not Shown)
9. a.	900-4908-27	Infeed Tray Spring Lock Only
b.	980-2003-53	Infeed Tray Slam Latch Kit
10.	900-4900-44	Pivot Pin Jam Nut
11.	980-0133-09	Pivot Tube
12.	981-300151	Pivot Pin
13.	900-2909-93	LED 3-Light Bar
14.	980-300118	Mount For LED 3-Light Bar
15. a.	905-2001-55	Control Bar (Model 15XP)
b.	912-1001-10	Control Bar (Models 1390HD & 1390 STD)
16. a.	911-3004-83	Folding Tray Lock Tab For 3/4” Diameter Pin (Models 15XP/1390HD)
b.	980-0137-06	Folding Tray Lock Tab For 1/2” Diameter Pin (Model 1390STD)
17.	900-2924-29	LED Red Marker Light - 3/4” Round
18.	905-8000-06	Fuel Saver Kit
19.	900-2905-13	LED Oval Tail Light
20.	937-3014-82	Oval Tail Light Cover
21.	900-4914-18	Plastic Knob
22.	981-1005-30	Wooden Push Paddle
23.	980-0136-44	Shut Down Switch Mount
24.	900-2914-65	Shut Down Switch Assembly
25. a.	980-300290	License Plate and Light Mount
b.	905-3002-28	License Plate and Light Mount - Australia
26.	900-2927-84	License Plate Light
27.	980-0122-55	Wooden Push Paddle Mount
28. a.	980-0509-25	Last Chance Cable Kit - Pulleys, Cables, Clamps
b.	900-4904-29	Last Chance Orange Cable With Clamp
c.	980-0508-64	Last Chance Cable Assembly Kit
29.	980-100139	Hydraulic Control Arm - 20 1/2”
30.	980-100141	Feedwheel Control Valve Linkage
31. a.	905-2001-45	Winch and Valve Mount (Model 15XP)
b.	905-2001-59	Winch and Valve Mount - Australia
c.	915-2000-16	Winch and Valve Mount (Models 1390HD & 1390STD)
32.	909-3000-62	Scraper Bar
33.	981-300066	Bottom Feedwheel Bearing Backer Plate
34.	900-1909-79	Feedwheel Bearing - Set Screw Style
35.	900-4909-23	Bottom Feedwheel Bearing Bolt (1/2”-13NC x 1 1/4” SHCS)
36.	980-0508-57	Coupler Guard Mount
37.	900-7901-23	Rubber Coupler Guard - 17 3/4”

NOTICE **The Model 1390STD was built until 8/13.**

NOTICE **The Model 1390 hydraulic feedwheel motors may be on the left side or the right side of the machine, depending on the machine serial number.**

NOTICE **Grip-Tite style feedwheel bearings are on the hydraulic motor side.**

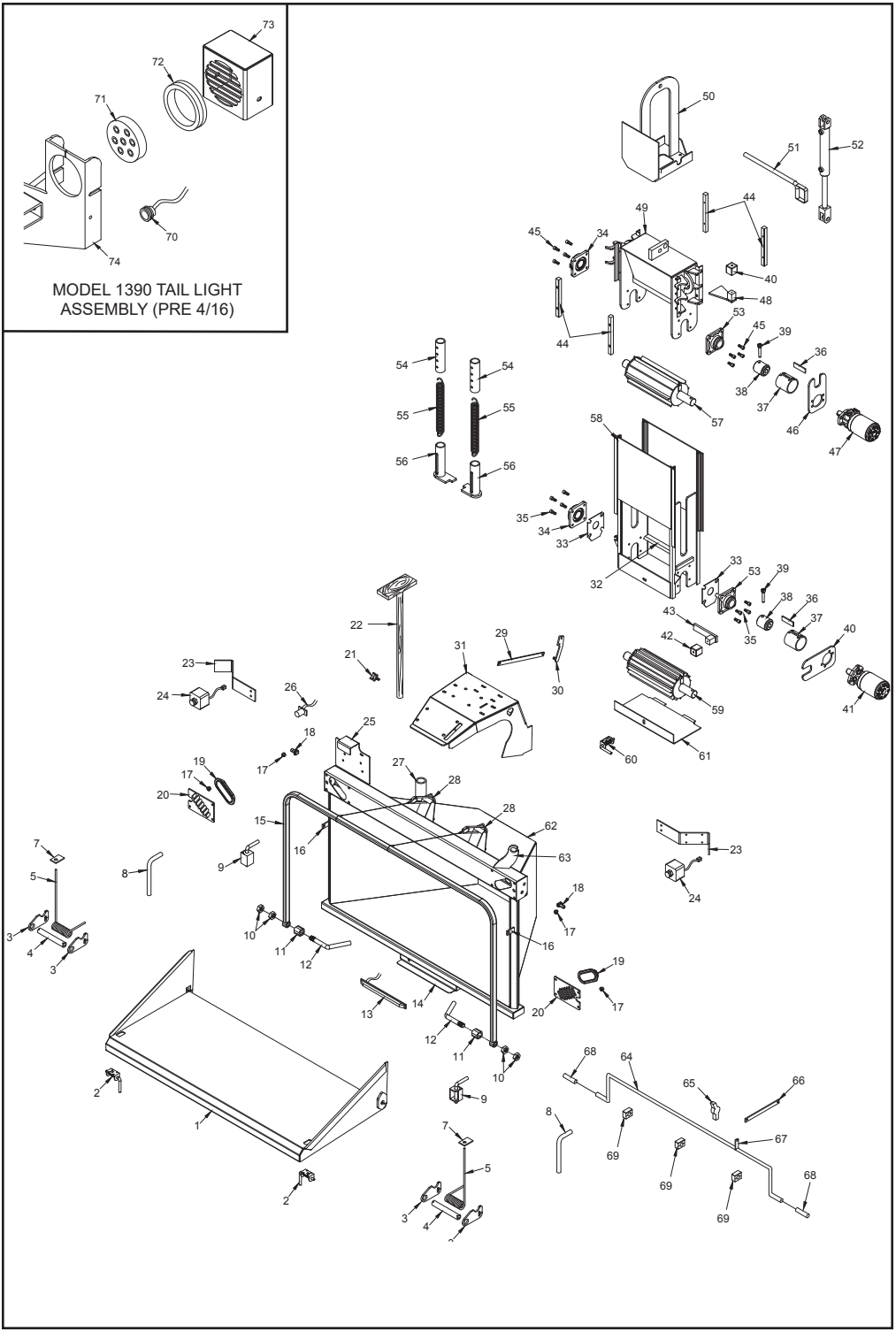

NOTICE Parts may not be exactly as shown.

LOCATION	PART NUMBER	DESCRIPTION
38. a.	981-0501-31	Coupler Assembly (Includes 36 and 38) (Models 1390HD & 15XP)
b.	917-2000-08	Coupler Assembly (Model 1390STD)
39. a.	900-4909-54	Taper Pin With Nut (Models 15XP/1390HD)
b.	900-4909-53	Taper Pin With Nut (Model 1390STD)
40. a.	981-100050	Bottom Torque Arm With Coupler Guard Mount (Models 15XP/1390HD)
b.	981-300196	Bottom Torque Arm (Models 15XP/1390HD)
c.	980-0124-98	Bottom Torque Arm (Model 1390STD)
41. a.	900-3973-16	Bottom Feedwheel Hydraulic Motor (Models 15XP/1390HD)
b.	900-3972-05	Bottom Feedwheel Hydraulic Motor (Model 1390STD)
42.	937-900009	4 Sided Torque Arm Cushion
43. a.	980-300514	Bottom Torque Arm Stop
b.	937-300316	Torque Arm Cushion Mount
44.	980-0138-10	Yoke Slide - 1” x 1” x 11 1/2”
45.	900-4913-62	Top Feedwheel Bearing Bolt (1/2”-13NC x 1 1/8” SHCS)
46. a.	981-100049	Top Torque Arm With Coupler Guard Mount (Models 15XP/1390HD)
b.	981-300197	Top Torque Arm (Models 15XP/1390HD)
c.	980-0124-98	Top Torque Arm (Model 1390STD)
47. a.	900-3973-17	Top Feedwheel Hydraulic Motor (Models 15XP/1390HD)
b.	900-3972-04	Top Feedwheel Hydraulic Motor (Model 1390STD)
48. a.	981-300199	Top Torque Arm Stop (Models 15XP/1390HD)
b.	980-300515	Top Torque Arm Stop (Model 1390STD)
c.	937-300316	Torque Arm Cushion Mount
49. a.	915-1000-02	Top Yoke Assembly (Includes 34 - 40, 44 - 46, 54 & 57)
b.	915-2000-02	Top Yoke Assembly (Models 15XP/1390HD)
c.	917-2000-06	Top Yoke Assembly (Model 1390STD)
50. a.	911-200011	Yoke Lift Assembly (Models 15XP/1390HD)
b.	911-2001-70	Top Yoke Plate Without Yoke Lift (Not Shown) (Models 15XP/1390HD)
c.	917-2000-10	Yoke Lift Assembly (Model 1390STD)
d.	980-200206	Top Yoke Plate Without Yoke Lift (Not Shown) (Model 1390STD)
e.	980-0132-68	Decal Plate Only
51. a.	955-1005-91	Yoke Lock Pin (Models 15XP/1390HD)
b.	980-200223	Yoke Lock Pin (Model 1390STD)
52. a.	900-3928-15	Yoke Lift Cylinder-Welded (Models 15XP/1390HD)
b.	900-3925-05	Yoke Lift Cylinder-Welded (Model 1390STD)
c.	904-0007-14	Pin for Welded Cylinder
d.	900-4913-23	Rubber Washer - Top Of Cylinder (Not Shown)
53.	900-1909-80	Feedwheel Bearing - Grip-Tight Style
54. a.	981-300030	Top Mount for Easy Climb System
b.	900-4905-14	Clevis Pin (Not Shown)
c.	900-4905-19	Hair Pin for Clevis Pin (Not Shown)
55. a.	900-4903-81	Yoke Spring (Models 15XP/1390HD)
b.	900-4900-04	Yoke Spring (Model 1390STD)
56. a.	980-2004-40	Bottom Mount for Easy Climb System - Left Side
b.	980-2003-72	Bottom Mount for Easy Climb System - Right Side
c.	900-4905-79	Clevis Pin (Not Shown)
d.	900-4905-80	Cotter Pin for Clevis Pin (Not Shown)
e.	900-4906-90	Flat Washer (Not Shown)
57. a.	981-0501-32	Top Feedwheel Assembly (Models 15XP/1390HD)
b.	917-2000-07	Top Feedwheel Assembly (Model 1390STD)
c.	981-300191	Top Feedwheel Tooth
d.	981-0501-31	Top Feedwheel Shaft & Coupler Assembly

NOTICE **The Model 1390STD was built until 8/13.**

NOTICE **The Model 1390 hydraulic feedwheel motors may be on the left side or the right side of the machine, depending on the machine serial number.**

NOTICE **Grip-Tight style feedwheel bearings are on the hydraulic motor side.**

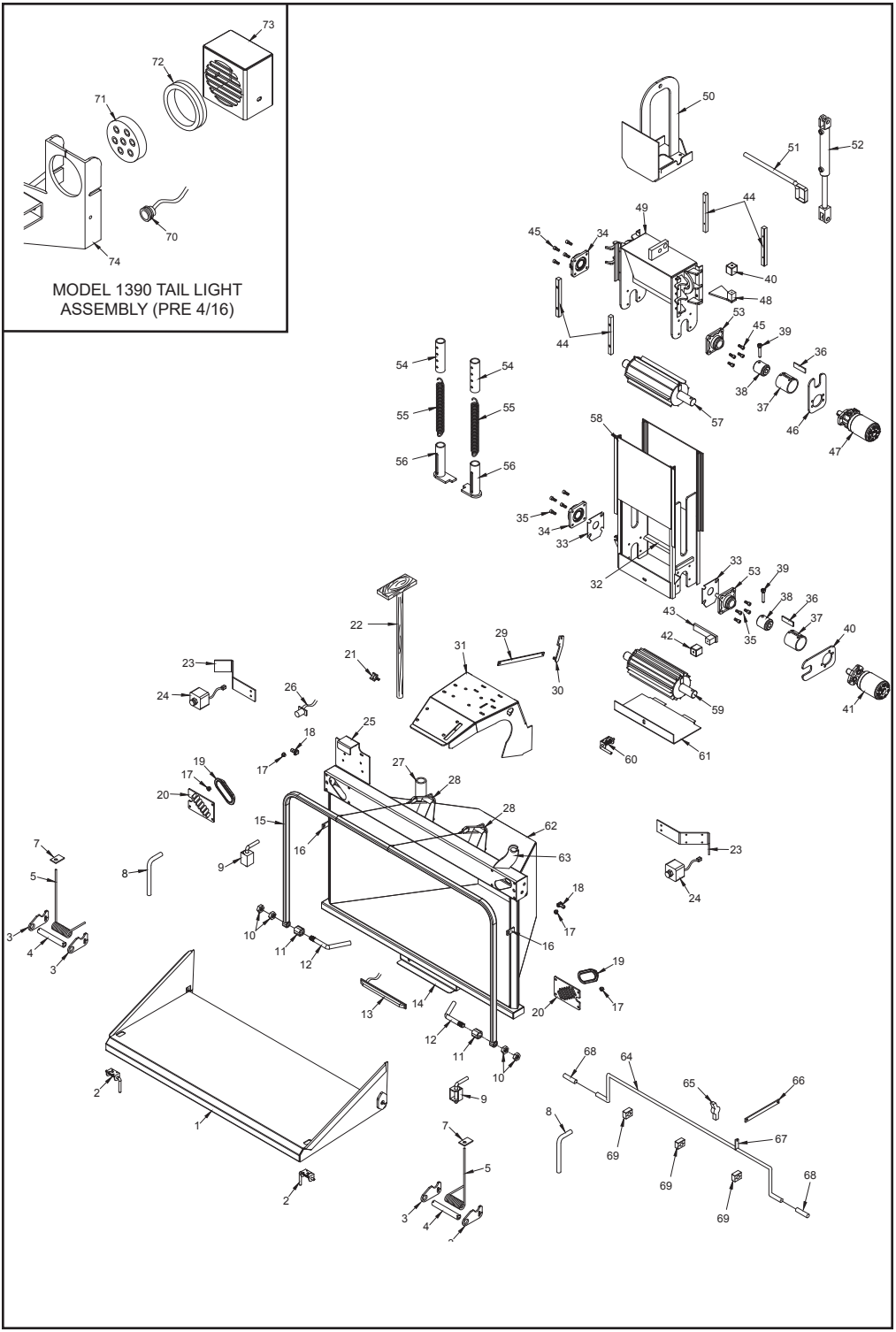

NOTICE Parts may not be exactly as shown.

LOCATION	PART NUMBER	DESCRIPTION
58. a.	915-1000-01	Feedwheel Slide Box Assembly (Includes 33 - 41 & 53)
b.	915-2000-01	Feedwheel Slide Box Assembly (Models 15XP/1390HD)
c.	917-2000-04	Feedwheel Slide Box Assembly (Model 1390STD)
59. a.	981-0501-28	Bottom Feedwheel Assembly (Models 15XP/1390HD)
b.	917-2000-09	Bottom Feedwheel Assembly (Model 1390STD)
c.	981-300191	Bottom Feedwheel Tooth
d.	981-0501-31	Bottom Feedwheel Shaft & Coupler Assembly
60.	900-4901-83	Trap Door Spring Lock
61. a.	911-0500-30	Trap Door Assembly (Models 15XP/1390HD)
b.	917-2000-05	Trap Door Assembly (Model 1390STD)
c.	001-3004-00	Hinge For Trap Door
62.	915-1000-75	Infeed Hopper Assembly
63.	955-3010-97	Winch Cable Hook Mount
64. a.	905-2000-82	Dual Yoke Lift Control Bar Kit
b.	917-2000-27	Dual Yoke Lift Control Bar
65.	900-3930-96	Short Valve Handle - Lift Cylinder Control Linkage
66.	626-100061	Control Arm - Dual Yoke Lift - 11 1/2”
67.	980-100157	Dual Yoke Lift Control Bar Tab
68.	900-7900-96	Rubber Cap - Dual Yoke Lift Control Bar
69.	900-3914-02	Clamp - Lift Control Bar
70. a.	900-2927-85	LED Red Marker Light - 3/4” Round
b.	900-2915-98	LED Red Marker Light - Oval
71. a.	900-2908-76	LED Tail Light
b.	900-2908-74	Adapter Wire for LED Tail Light (Not Shown)
72.	900-2908-75	Rubber Grommet for LED Tail Light
73.	980-2002-82	Heavy Duty Tail Light Cover
74. a.	980-200176	Tail Light Mount - Left Side
b.	980-200177	Tail Light Mount - Right Side

NOTICE **The Model 1390STD was built until 8/13.**

NOTICE **The Model 1390 hydraulic feedwheel motors may be on the left side or the right side of the machine, depending on the machine serial number.**

NOTICE **Grip-Tite style feedwheel bearings are on the hydraulic motor side.**

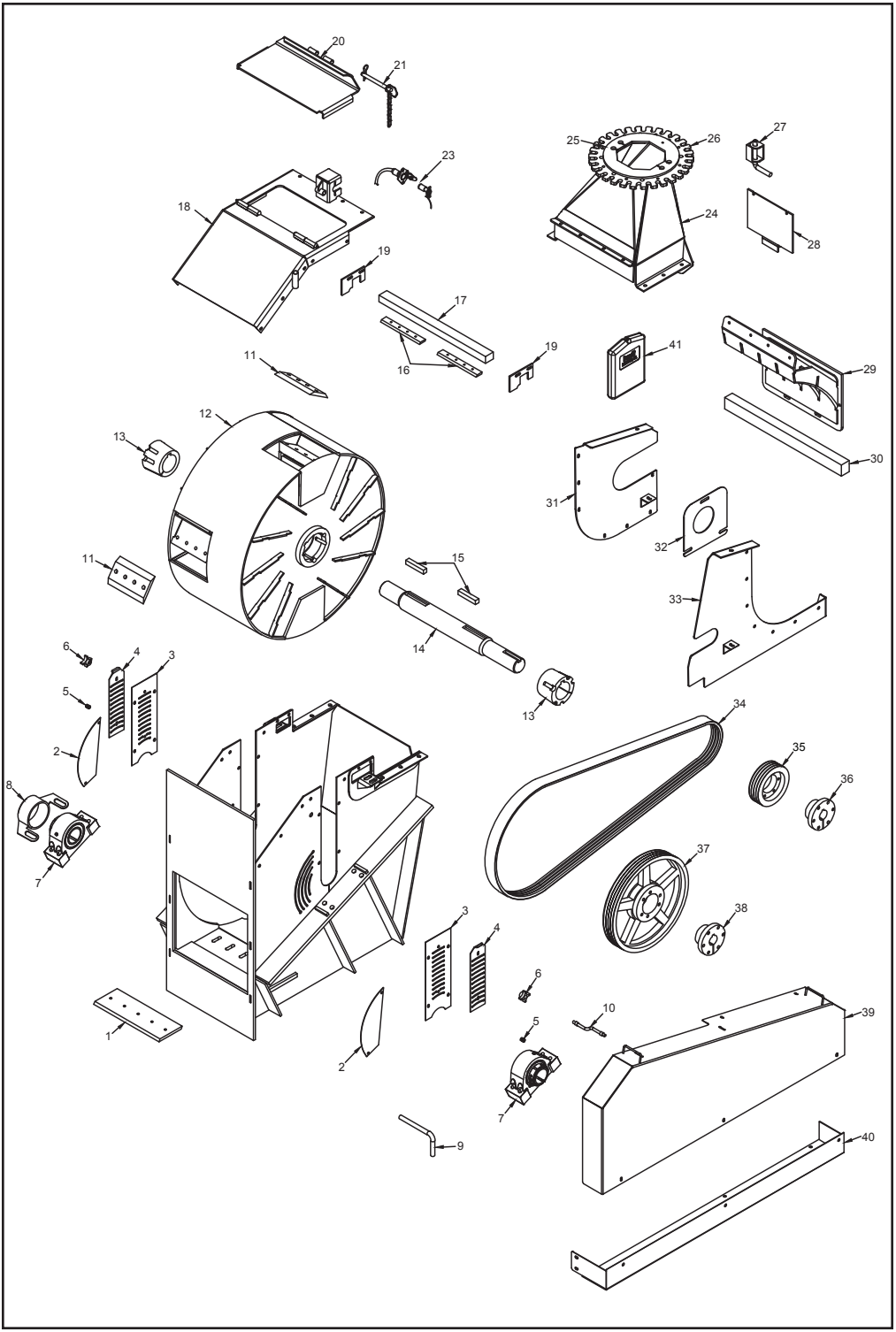

NOTICE Parts may not be exactly as shown.

LOCATION		PART NUMBER	DESCRIPTION
1.		See Page 107	Anvil
2.		911-1001-88	Vent cover
3.		937-1012-38	Base Slot Cover
4.	a.	937-300007	Air Vent Cover - Steel
	b.	937-300008	Air Vent Cover - Aluminum
	c.	937-100001	Air Vent Cover Kit - Steel (Includes Two Pieces Of 4a, 5, & 6)
	d.	937-100000	Air Vent Cover Kit - Aluminum (Includes Two Pieces Of 4b, 5, & 6)
5.		900-4908-33	Spring For Vent Cover
6.		900-4908-29	Plastic Knob For Vent Cover
7.	a.	900-1914-80	Chipper Drum Bearing
	b.	900-4910-40	Chipper Drum Bearing Bolt (3/4”-10NC x 5” Hex Head) - Left Side Only
	c.	900-4910-34	Chipper Drum Bearing Bolt (3/4”-10NC x 4 1/2” Hex Head) - Right Side Only
	d.	900-4901-47	Washer for Chipper Drum Bearing (3/4” Mill Carb)
	e.	900-4910-19	Chipper Drum Bearing Jam Nut (3/4”-10NC Hex Jam Nut) - Left Side Only
	f.	900-4901-23	Chipper Drum Bearing Nut (3/4”-10NC Hex Nut) - Right Side Only
8.		917-2000-24	Drum Shaft Bearing Cover
9.	a.	955-300086	Drum Lock Pin
	b.	900-7900-96	Rubber Cap (Not Shown)
10.		900-3921-02	Chipper Bearing Grease Line
11.		See Page 106	Chipper Knife & Hardware
12.	a.	915-2000-64	Chipper Drum Head Assembly (Start WO# 60280)
	b.	909-2000-11	Chipper Drum Head Assembly (Includes 11, 13, 14, & 15)
13.		900-1906-26	Drum Head Bushing
14.		909-3000-32	Drum Head Shaft
15.		937-1004-19	Key for Drum Head Shaft
16.	a.	937-3009-23	Shear Bar Knife
	b.	900-4909-86	Shear Bar Knife Bolts (1/4”-20NC x 5/8” SHCS - 8 per)
17.	a.	917-3000-43	Shear Bolt Plate
	b.	917-1000-09	Shear Assembly (Includes 16)
18.	a.	917-3000-45	Base Top
	b.	915-2000-35	Base Top With Door Assembly (Includes 20 & 21)
	c.	909-3000-26	Pin For Hood Door Hinge (Pre 6/15)
19.		917-3000-52	Shear Slot Cover
20.	a.	912-3001-60	Hood Door Only (Start 2/04)
	b.	900-4911-84	Grease Zerk For Hood Door Hinge
21.		900-4905-37	Hood Pin With Attaching Chain
22.	a.	900-4902-20	Padlock For Hood Pin (Not Shown)
	b.	900-4917-21	Key For Padlock (Not Shown)
23.	a.	909-1000-01	Engine Disable Plug Kit (Includes Plug, Wiring, & Mounts)
	b.	900-2904-13	6-Prong Female Plug Only
	c.	980-100083	6-Prong Male Plug With Wire Loop & Crimp Sleeves
24.		915-2000-83	21” Tall Transition Ass’y (Start
25.		937-1005-63	Transition Flange
26.		980-3013-58	Bottom Swivel Ring
27.	a.	900-4908-27	Discharge Spring Lock
	b.	900-7900-96	Rubber Cap (Not Shown)
28.		909-3000-48	Optional Clean-Out Door

**** Components vary with engine options order by physical description or machine S/N.**

NOTICE **Nuts, bolts, washers, and all other components can be ordered by physical description.**

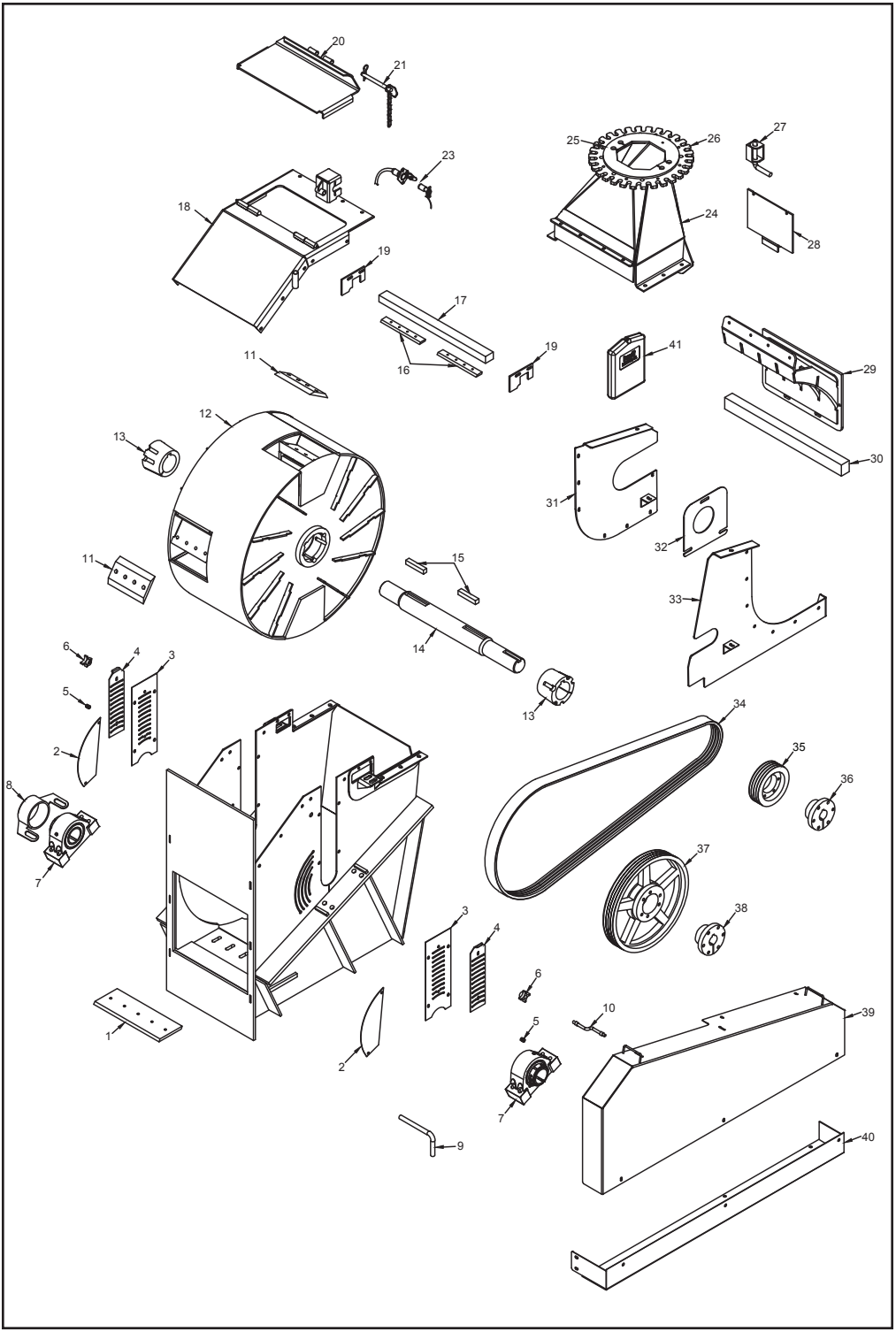

NOTICE Parts may not be exactly as shown.

LOCATION	PART NUMBER	DESCRIPTION
29.	915-2000-21	Optional Chip Breaker Assembly
30.	900-6913-93	Foam Power Slot Guard - Gas Engines
31.	912-300037	Removable PTO Cover - Beltshield Back
32.	980-300413	Adjustable Beltshield Cover - Auto Clutch
33.	912-300038	Removable PTO Cover - Beltshield Back
34.	**	Chipper Belts
35.	**	Engine Sheave
36.	**	Engine Sheave Bushing
37.	**	Chipper Sheave
38.	**	Chipper Sheave Bushing
39. a.	911-2001-79	Beltshield Assembly (Start 10/16)
b.	911-2001-99	Beltshield Assembly (Pre 10/16)
40. a.	911-2001-80	Beltshield Bottom (Start 10/16)
b.	912-200016	Beltshield Bottom (Pre 10/16)
41. a.	900-9910-28	Manual Holder - 8” x 11” x 2”
b.	900-9902-07	Manual Holder - 10” x 12-1/2” x 2” (Stored In Tool Box)

**** Components vary with engine options order by physical description or machine S/N.**

NOTICE **Nuts, bolts, washers, and all other components can be ordered by physical description.**

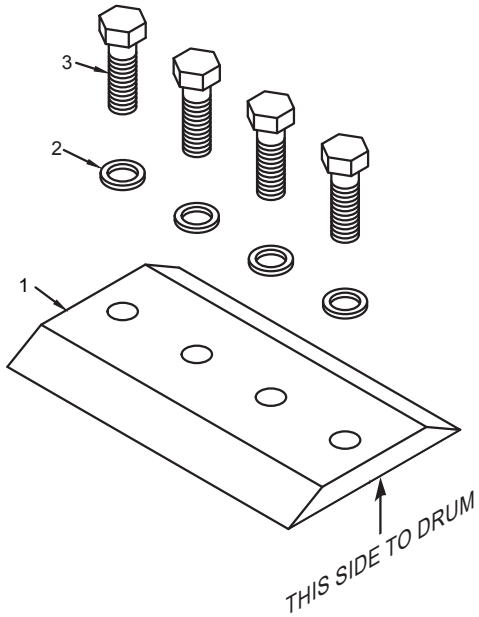

NOTICE **KNIFE BOLTS MUST BE INSTALLED THROUGH KNIFE AS SHOWN.**

Part Numbers For Knives & Hardware

LOCATION	PART NUMBER	DESCRIPTION
1.	912-3001-47	5/8” x 5 1/2” x 9” Chipper Knife
2.	900-4901-32	5/8” Mill Carb Washer
3.	900-4900-20	5/8”-11NC x 2” Knife Bolt

Knife Bolt Torque: 180 ft.-lbs. (245 Nm)

KNIFE SAVER KIT

LOCATION	PART NUMBER	DESCRIPTION
1.	900-9901-68	Knife Saver Kit
2.	900-9901-65	File For Knife Saver Kit Only
3.	900-9901-63	Replacement Blades For Knife Saver
4.	900-9901-66	Knife Changing Gloves

NOTICE Parts may not be exactly as shown.

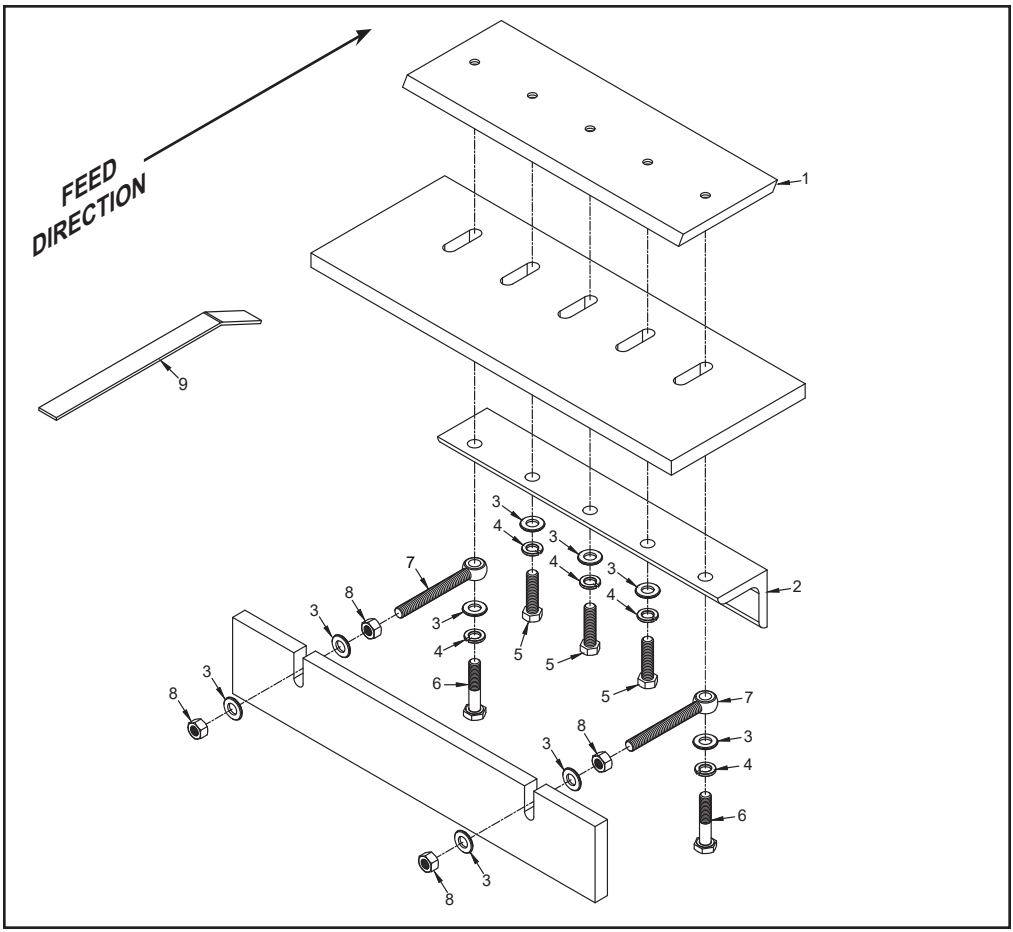

LOCATION	PART NUMBER	DESCRIPTION
1. a.	909-3000-67	Anvil Only
b.	909-3000-69	“AR” Anvil Only
2.	912-3001-53	Anvil Clamp Plate
3.	900-4909-18	1/2” Mill Carb Washer
4.	900-4906-86	1/2” Lock Washer
5.	900-4900-74	1/2”-13NC x 2” Hex Head Bolt
6.	900-4903-17	1/2”-13NC x 2 1/2” Hex Head Bolt
7. a.	900-4907-91	Anvil Eye Bolt - 1/2”-13NC x 4 1/2” (Current)
b.	900-4902-73	Anvil Eye Bolt - 1/2”-13NC x 5 1/2” (Prior)
8.	900-4900-45	1/2”-13NC Hex Nut
9.	955-300193	Anvil Gauge
10.	904-0003-90	Anvil Hardware Kit Only (Includes 3 - 8)
11.	909-1000-11	Anvil & Hardware Kit (Includes 1a & 3 - 8)

Anvil Bolt Torque: 75 ft.-lbs. (102 Nm)

NOTICE Parts may not be exactly as shown.

HEIGHT ADJUSTABLE HAND CRANK & HYDRAULIC SWIVEL DISCHARGE

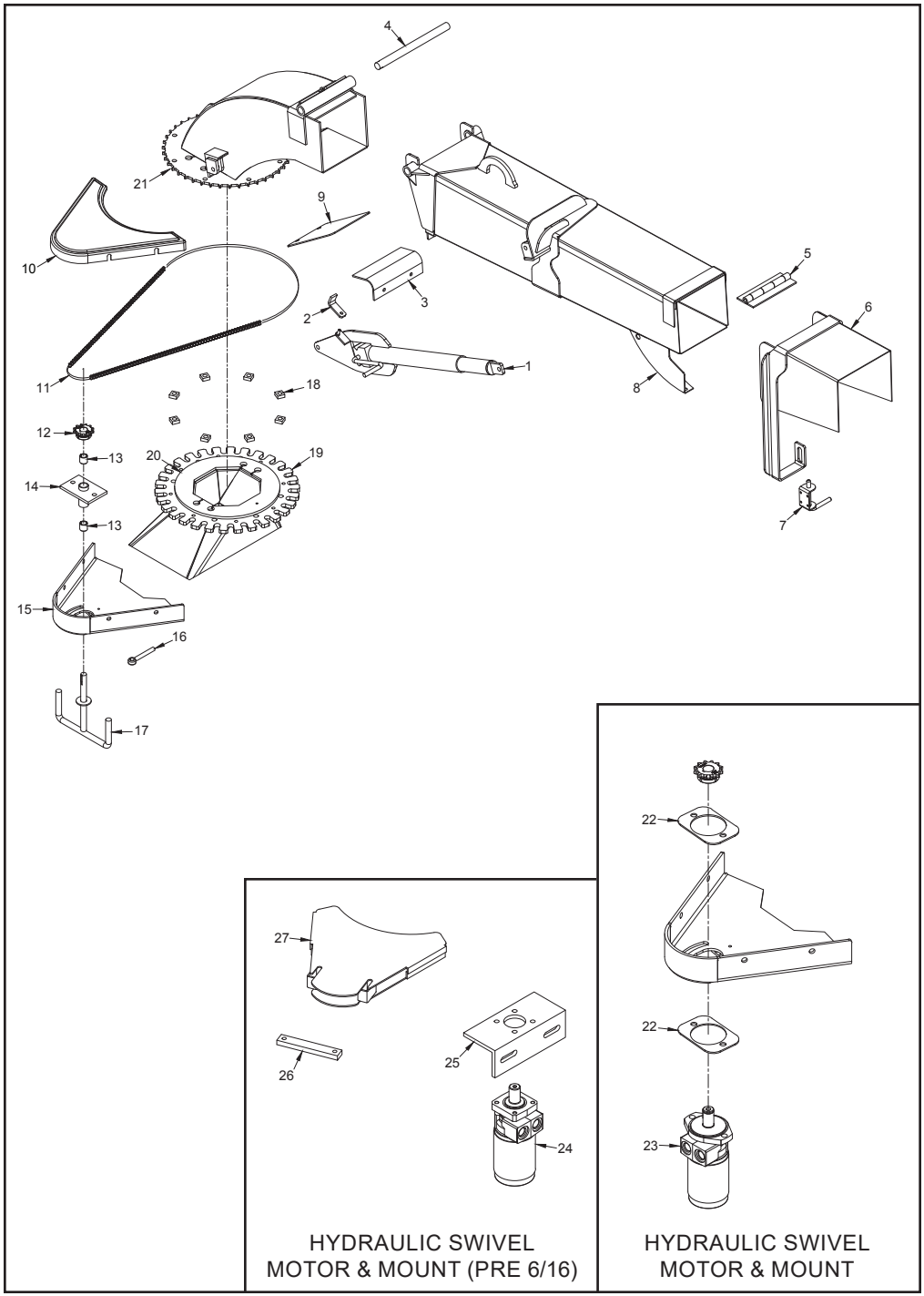

NOTICE Parts may not be exactly as shown.

HEIGHT ADJUSTABLE HAND CRANK & HYDRAULIC SWIVEL DISCHARGE

LOCATION		PART NUMBER	DESCRIPTION
1.	a.	980-0510-86	Hand Crank For Adj. Height Discharge - Mounted On The Side
	b.	912-200035	Hand Crank For Adj. Height Discharge - Mounted On The Road Side
	c.	980-0508-51	Hand Crank For Adj. Height Discharge - Mounted Underneath
2.	a.	955-300434	Handle Lock
	b.	900-4906-60	Discharge Transport Nut - 3/8”-16NC
3.		980-0126-12	Rubber Discharge Guard
4.		980-300209	Hand Crank Adjustable Height Hinge Pin
5.		980-0101-59	Discharge Flipper Hinge
6.	a.	980-0509-26	12” Discharge Flipper Assembly (Includes 5 & 7)
	b.	980-0510-25	12” Enclosed Discharge Flipper Assembly (Includes 5 & 7)
7.	a.	900-4901-83	Discharge Flipper Adjusting Spring
	b.	900-7900-93	Black Rubber Cap (Not Shown)
8.	a.	980-0510-23	Adjusting Spring Lock Plate Assembly for Standard Flipper
	b.	980-0510-24	Adjusting Spring Lock Plate Assembly for Enclosed Flipper
9.		911-300129	Clean-Out Door
10.		900-9904-64	Chain Guard
11.	a.	900-1901-20	#50 Roller Chain
	b.	900-1901-18	Half Link - Chain (Not Shown)
	c.	900-1901-19	Master Link - Chain (Not Shown)
12.		900-1915-71	Sprocket for Swivel Discharge
13.		900-1909-36	Bushing Only
14.		980-200006	Chain Adjuster Assembly
15.		937-200018	Discharge Swivel Mount
16.		900-4905-43	Eye Bolt Adjuster
17.	a.	937-200064	T-Handle Assembly
	b.	900-7900-96	Rubber Cap
18.		980-0137-35	Spacer Block
19.		980-3013-58	Bottom Swivel Ring
20.		937-1005-63	Transition Flange
21.		980-3014-56	Discharge Bottom Swivel Ring
22.		905-3003-65	Hydraulic Motor Mount Plate - Bolt On
23.		900-3977-10	Hydraulic Motor for Swivel Discharge
24.	a.	900-3972-06	Hydraulic Motor for Swivel Discharge - SAE O-Ring Fitting
	b.	900-3973-28	Hydraulic Motor for Swivel Discharge - Pipe Fitting
25.		980-0110-66	Motor Mount for Swivel Discharge
26.		937-1005-35	Chain Guard Mount
27.		937-200061	Chain Guard

NOTICE **Nuts, bolts, washers, and all other components can be ordered by physical description.**

MANUAL DISCHARGE

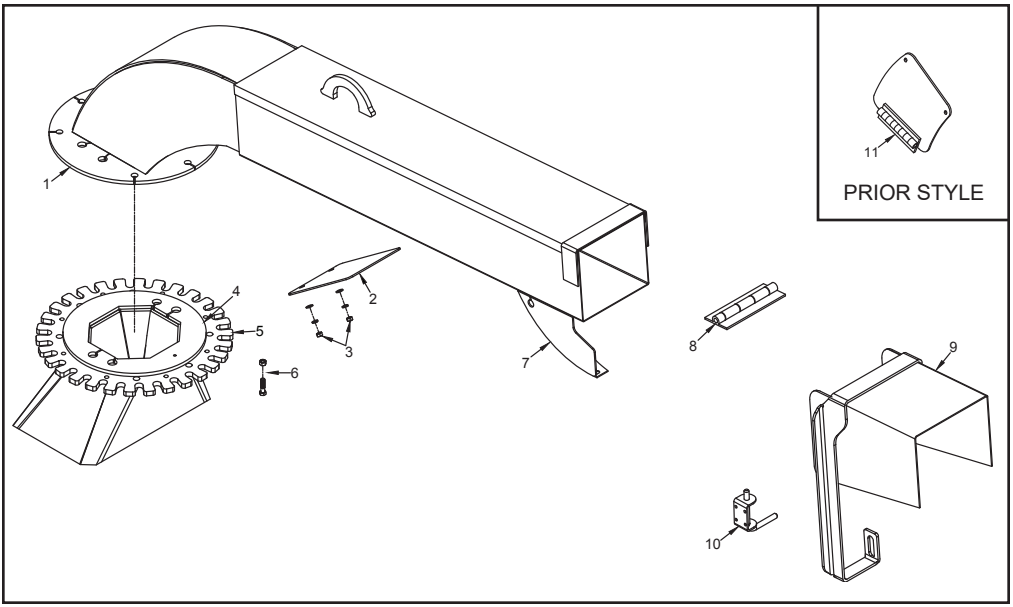

LOCATION	PART NUMBER	DESCRIPTION
1.	980-300338	Discharge Bottom Swivel Ring
2. a.	911-300129	Clean Out Door (Start 5/12)
b.	980-300616	Clean Out Door (Pre 5/12)
3. a.	900-4910-73	5/16”-18NC Hex Nut
b.	900-4906-47	5/16” Lock Washer
c.	900-4906-48	5/16” Flat Washer
4.	937-1005-63	Hood Flange
5.	980-3013-58	Bottom Swivel Ring
6. a.	900-4910-54	Discharge Transport Bolt - 3/8”-16NC x 1 1/2”
b.	900-4906-60	Discharge Transport Nut - 3/8”-16NC
7. a.	980-0510-23	Adjusting Spring Lock Plate Assembly For Standard Flipper
b.	980-0510-24	Adjusting Spring Lock Plate Assembly For Enclosed Flipper
8.	980-0101-59	Discharge Flipper Hinge
9. a.	937-1009-10	12” Discharge Flipper Assembly (Includes 2 & 4)
b.	937-0502-24	12” Enclosed Discharge Flipper Assembly (Includes 2 & 4)
10. a.	900-4901-83	Discharge Flipper Adjusting Spring
b.	900-7900-93	Black Rubber Cap (Not Shown)
11.	980-0509-94	Optional Clean Out Door Assembly (Pre 9/06)

DISCHARGE ASSEMBLIES

LOCATION	PART NUMBER	DESCRIPTION
1.	911-2000-93	Manual Discharge Assembly
2.	911-2000-95	Hand Crank Swivel And Adjustable Height Discharge Assembly
3.	911-2000-94	Hand Crank Swivel Discharge Assembly
4.	911-2001-27	Adjustable Height Discharge Assembly
5.	911-2000-96	Hydraulic Swivel Discharge Assembly
6.	911-2000-97	Hydraulic Swivel And Adjustable Height Discharge Assembly

NOTICE Parts may not be exactly as shown.

DISCHARGE WITH HYDRAULIC FLIPPER

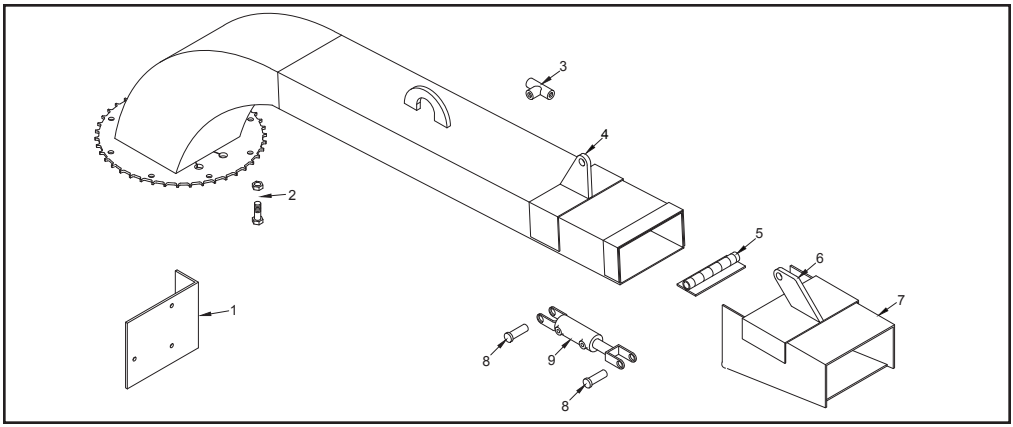

LOCATION	PART NUMBER	DESCRIPTION
1.	937-1003-30	Hydraulic Flipper Control Valve Mount Plate
2. a.	900-4911-04	Discharge Transport Bolt - 5/8”-11NC x 1 1/2”
b.	900-4903-25	Discharge Transport Nut - 5/8”-11NC
3.	900-3925-18	Check Valve
4.	960-0006-42	Straight Section Cylinder Lug
5.	980-0101-59	Hydraulic Flipper Hinge
6.	980-0126-48	Flipper Lug
7.	937-0501-63	12” Hydraulic Flipper Assembly - Enclosed (Includes 4 & 5)
8.	900-3930-71	Cylinder Lug Pin - 3/4” Dia. x 2 1/2” & Cotter Pin - 1/4” x 1 1/2”
9.	900-3928-16	Hydraulic Flipper Cylinder
10.	900-3916-62	Swivel Discharge & Discharge Flipper Control Valve (Not Shown)

NOTICE **Nuts, bolts, washers, and all other components can be ordered by physical description.**

NOTICE Parts may not be exactly as shown.

IN-LINE HYDRAULIC PRESSURE CHECK KIT

LOCATION	PART NUMBER	DESCRIPTION
1.	900-3920-73	5000 PSI Gauge
2.	900-3902-24	Quick Coupler
3.	900-3902-23	Test Nipple
4.	900-3911-47	Rubber Cap For Test Nipple
5.	900-3924-86	Fitting
6.	900-3926-11	Ball Valve
7.	900-3922-14	Fitting
8.	980-100121	In-Line Pressure Check Kit - With Autofeed (Includes 1-7)
9.	500-0000-43	Gauge & Quick Coupler Only (Includes 1 & 2)

HYDRAULIC SCHEMATIC (WITH NO OPTIONS)

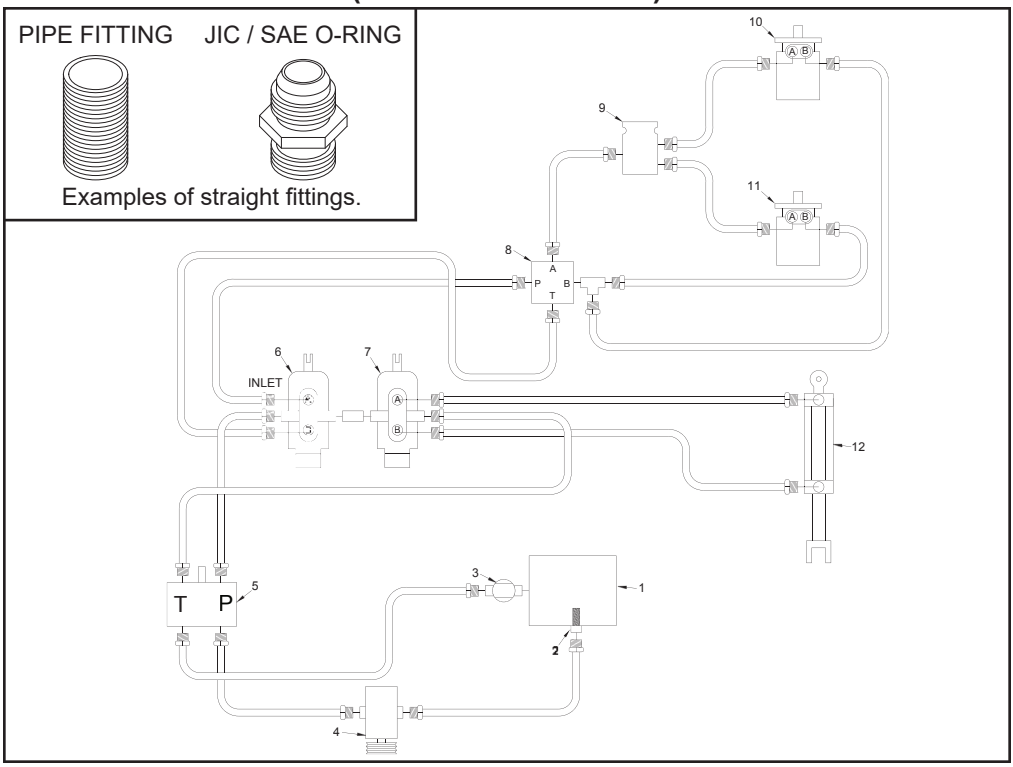

LOCATION	PART NUMBER	DESCRIPTION
1.	See Pages 126 - 127	Hydraulic Tank (Not Shown)
2.	900-3951-22	Hydraulic Tank Strainer (Not Shown)
3. a.	900-3900-09	Filter Head (Not Shown)
b.	900-3900-10	Filter (Not Shown)
4.	**	Hydraulic Pump (Not Shown)
5.	See Page 116	Relief Block
6.	900-3976-84	Hydraulic Yoke Lift Cylinder
7.	See Page 117	Reversing “Autofeed Plus”
8.	980-2003-91	Feedwheel Control Valve Without Relief - SAE O-ring
9.	See Pages 118 - 119	Flow Divider
10. a.	900-3973-17	Top Feedwheel Hydraulic Motor (Models 15XP/1390HD)
b.	900-3972-04	Top Feedwheel Hydraulic Motor (Model 1390STD)
11. a.	900-3973-16	Bottom Feedwheel Hydraulic Motor (Models 15XP/1390HD)
b.	900-3973-05	Bottom Feedwheel Hydraulic Motor (Model 1390STD)
12. a.	900-3925-04	Yoke Lift Cylinder - Welded
b.	904-0007-14	Pin For Welded Cylinder (Not Shown)
c.	904-0006-90	Seal Kit - Welded Lift Cylinder (Not Shown)
13. a.	980-100121	In-Line Pressure Check Kit - With Autofeed (Not Shown)
b.	980-100122	In-Line Pressure Check Kit - Without Autofeed (Not Shown)

** Hydraulic components, fittings, hoses will vary depending on optional equipment. Order by physical description.

** Hydraulic pumps need to be ordered by physical description and serial number of machine.

NOTICE The Model 1390STD was built until 8/13.

NOTICE Make sure to order components according to fitting type, fittings may vary on all components.

NOTICE Parts may not be exactly as shown.

HYDRAULIC DIAGRAM (WITH OPTIONS)

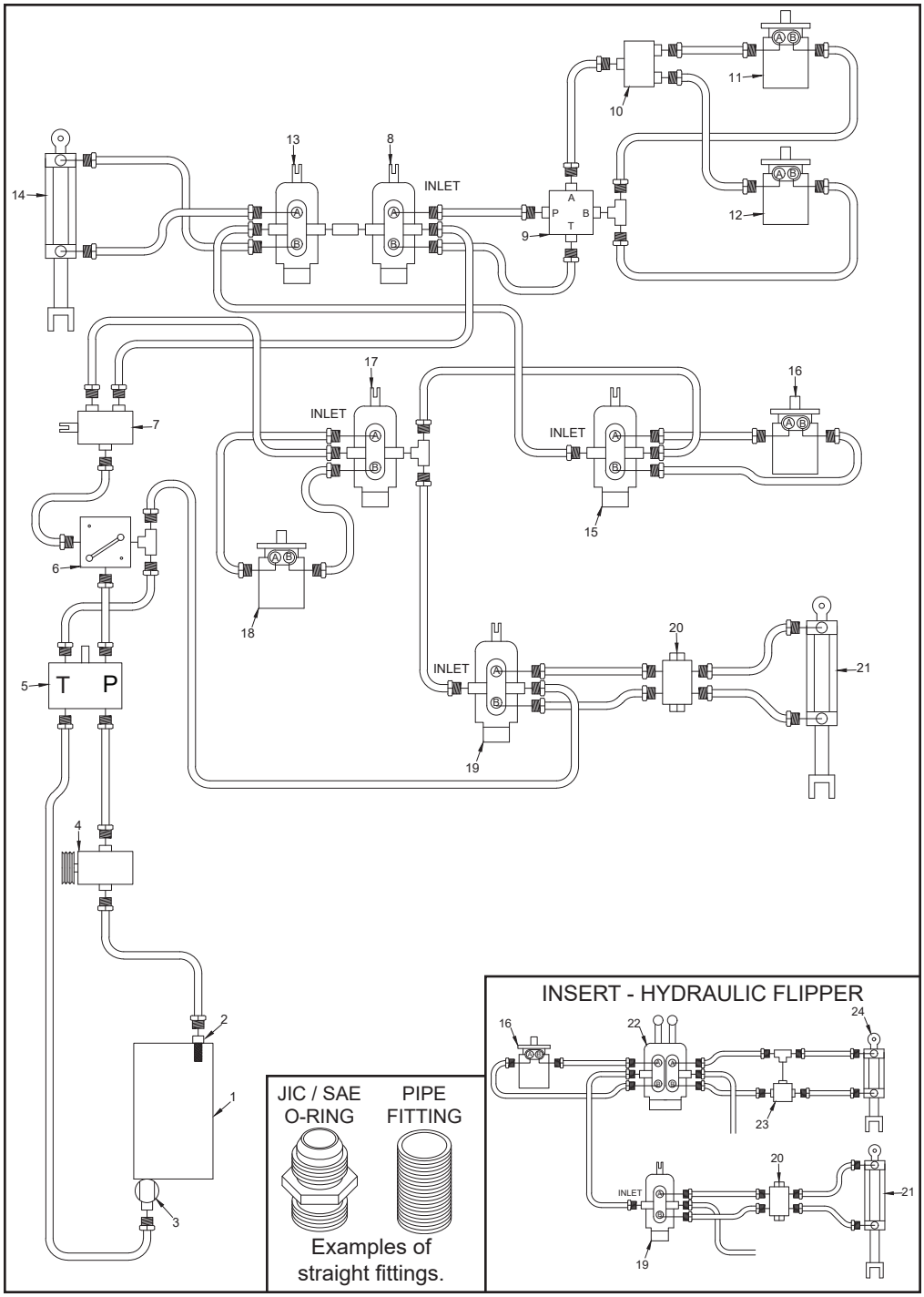

NOTICE Parts may not be exactly as shown.

HYDRAULIC DIAGRAM (WITH OPTIONS)

LOCATION	PART NUMBER	DESCRIPTION
1.	See Pages 126 - 127	Hydraulic Tank
2.	900-3951-22	Hydraulic Tank Strainer
3. a.	900-3900-09	Filter Head
b.	900-3900-10	Filter
4.	**	Hydraulic Pump
5.	See Page 116	Relief Block
6.	900-3924-55	Variable Speed Flow Control Valve - SAE O-ring
7.	900-3936-39	Winch Selector Valve
8.	900-3920-05A	Feedwheel Control Valve Without Relief - SAE O-ring
9.	See Page 117	Reversing “Autofeed Plus”
10.	See Pages 118 - 119	Flow Divider
11. a.	900-3973-17	Top Feedwheel Hydraulic Motor (Models 15XP/1390HD)
b.	900-3972-04	Top Feedwheel Hydraulic Motor (Model 1390STD)
12. a.	900-3973-16	Bottom Feedwheel Hydraulic Motor (Models 15XP/1390HD)
b.	900-3972-05	Bottom Feedwheel Hydraulic Motor (Model 1390STD)
13.	900-3927-73	Yoke Lift Control Valve For Dual Control Yoke Lift
14. a.	900-3928-15	Yoke Lift Cylinder - Welded
b.	904-0007-14	Pin For Welded Cylinder (Not Shown)
c.	904-0006-90	Seal Kit - Welded Lift Cylinder (Not Shown)
15. a.	900-3920-01	Swivel Discharge Control Valve Only
b.	900-3923-86	Restrictor Fitting - .062”
16.	900-3972-06	Swivel Discharge Hydraulic Motor
17.	900-3920-01	Winch Control Valve Only
18.	900-3972-06	Winch Hydraulic Motor
19.	900-3920-01	Tongue Jack Control Valve
20.	900-3977-42	Tongue Jack Check Valve
21.	900-3934-24	Tongue Jack Cylinder - Welded
22.	900-3916-62	Swivel Discharge & Discharge Flipper Control Valve
23.	900-3925-18	Flipper Check Valve
24.	900-3928-16	Discharge Flipper Cylinder
25. a.	980-100121	In-Line Pressure Check Kit - With Autofeed (Not Shown)
b.	980-100122	In-Line Pressure Check Kit - Without Autofeed (Not Shown)

** Hydraulic components, fittings, hoses will vary depending on optional equipment.
Order by physical description.
** Hydraulic pumps need to be ordered by physical description and serial number of machine.

NOTICE **The Model 1390STD was built until 8/13.**

NOTICE Make sure to order components according to fitting type, fittings may vary on all components.

NOTICE Parts may not be exactly as shown.

MAIN RELIEF BLOCK

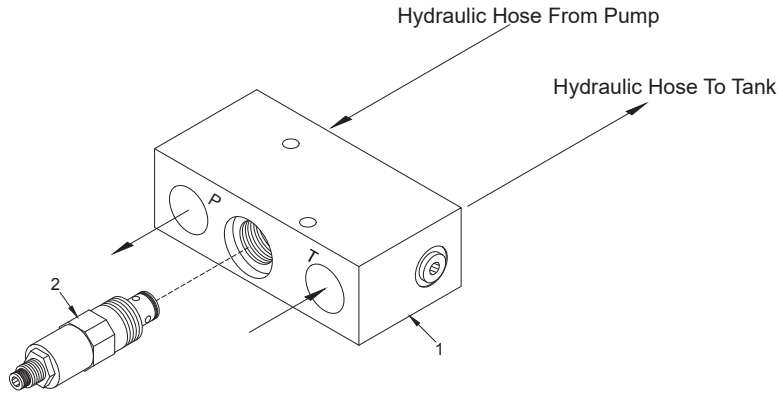

LOCATION	PART NUMBER	DESCRIPTION
1.	N/A	Main Relief Block Only
2.	900-3919-96	Main Relief Only
3.	900-3923-46	Main Relief Block Assembly (Includes #'s 1 & 2)

DUMP VALVE RELIEF BLOCK

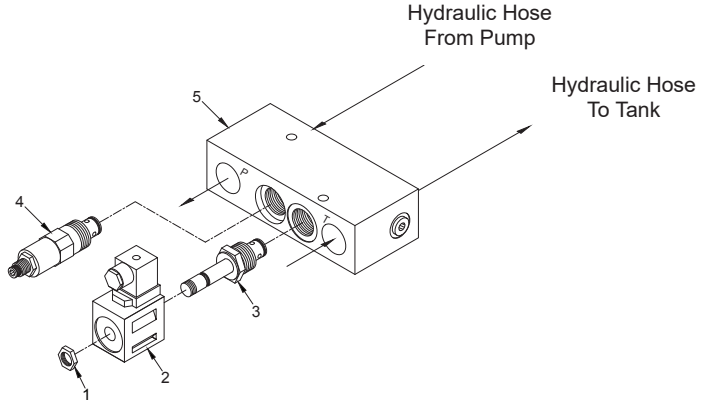

Torque Autofeed Cartridge Nut to a maximum of 4 to 6 ft.-lbs. (5 to 8 Nm) and install Loc-Tite 242. Over torque will cause damage and will also void warranty.

LOCATION	PART NUMBER	DESCRIPTION
1.	N/A	Autofeed Block Only
2.	900-3923-43	Autofeed Cartridge Only
3.	900-3923-44	12 Volt Autofeed Solenoid Only
4.	900-3919-96	Main Relief Only (Danfoss)
5. a.	900-3923-45	Autofeed Block Assembly With Relief
b.	900-3923-37	Autofeed Block Assembly Without Relief

NOTICE Parts may not be exactly as shown.

“AUTOFEED PLUS” VALVE (DUAL SOLENOID)

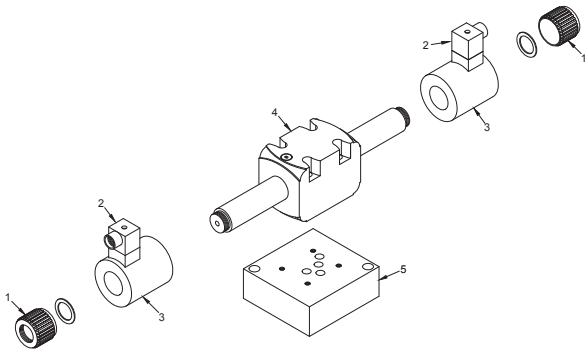

Torque Retainer Nut to a maximum of 4 to 6 ft.-lbs. (5 to 8 Nm) and install Loc-Tite 242.
Over torque will cause damage and will also void warranty.

LOCATION	PART NUMBER	DESCRIPTION
1.	900-3920-20	Retainer Nut and Sealing Ring (Danfoss)
2.	900-2909-55	Herschman Connector Only
3.	900-3983-36	Solenoid Only (Danfoss)
4.	900-3982-41	Dual Solenoid Assembly (Includes #’s 1,3,4, & 6)
5.	900-3931-30	Autofeed Plus Subplate
6.	900-3967-44	Seal Kit For Danfoss Valve (Not Shown)
7. a.	900-3925-89	10’ Cord and Molded Herschman Connector (Not Shown)
b.	900-3920-71	16’ Cord and Molded Herschman Connector (Not Shown)
c.	900-3918-63	25’ Cord and Molded Herschman Connector (Not Shown)

“AUTOFEED PLUS” VALVE (SINGLE SOLENOID)

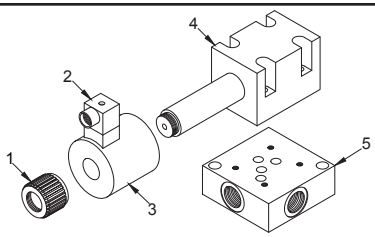

Torque Retainer Nut to a maximum of 4 to 6 ft.-lbs. (5 to 8 Nm) and install Vibra Tite.
Over torque will cause damage and will also void warranty.

LOCATION	PART NUMBER	DESCRIPTION
1.	900-3920-20	Retainer Nut and Sealing Ring (Danfoss)
2.	900-2909-55	Herschman Connector Only
3.	900-3920-19	Solenoid Only (Danfoss)
4.	900-3919-73	Solenoid Assembly (Danfoss Includes #’s 1,3,4, & 5)
5.	900-3923-34	Autofeed Plus Relief Block Subplate (Edmore)
6.	4589960	Seal Kit For Danfoss Valve (Not Shown)
7. a.	900-3925-89	10’ Cord and Molded Herschman Connector (Not Shown)
b.	900-3920-71	16’ Cord and Molded Herschman Connector (Not Shown)
c.	900-3918-63	25’ Cord and Molded Herschman Connector (Not Shown)

NOTICE Parts may not be exactly as shown.

HOSE CLAMP

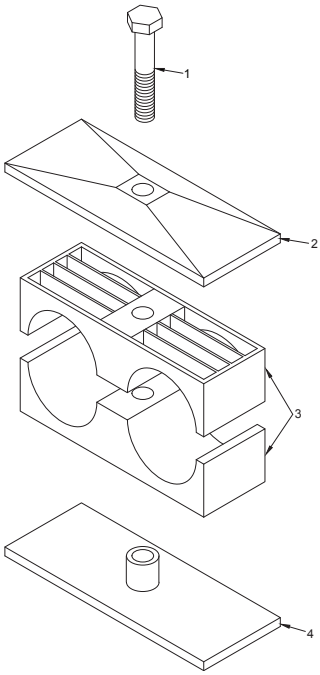

HOSE GUARD

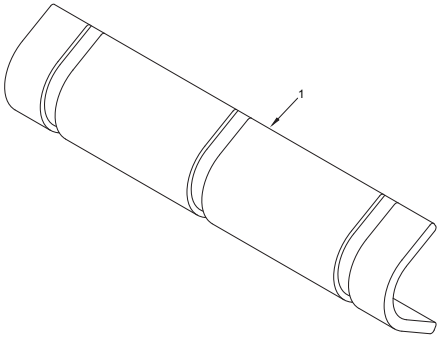

FLOW DIVIDER

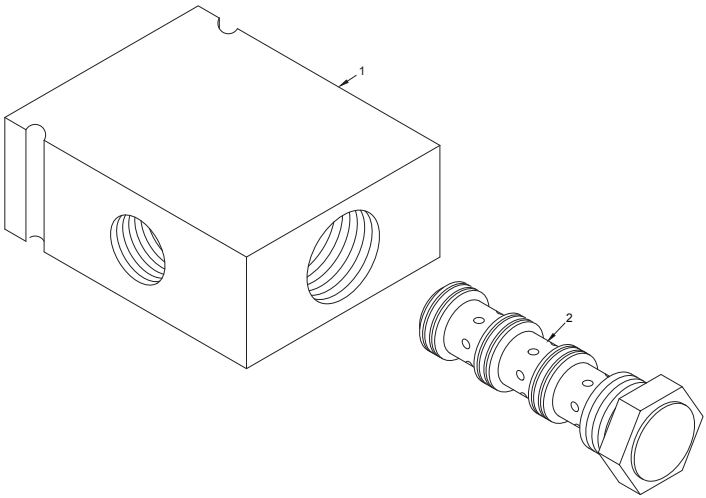

NOTICE Parts may not be exactly as shown.

HOSE CLAMP

LOCATION		PART NUMBER	DESCRIPTION
1.		900-3914-10	Bolt for 1/2” Clamp
2.		900-3914-11	Locking Plate for 1/2” Double Clamp
3.		900-3926-46	Plastic Clamp for 1/2” Double Clamp
4.	a.	900-3914-09	Weld Plate for 1/4” Double Clamp
	b.	900-3914-08	Weld Plate for 1/2” Double Clamp
	c.	900-3926-47	Weld Plate for 3/4” Double Clamp
5.	a.	900-3917-25	1/4” Double Clamp Assembly (Includes #’s 1-4)
	b.	900-3926-44	3/8” Double Clamp Assembly (Includes #’s 1-4)
	c.	900-3928-19	1/2” Single Clamp Assembly (Includes #’s 1-4)
	d.	900-3914-02	1/2” Single Clamp Assembly For Steel Lines (Includes #’s 1-4)
	e.	900-3915-61	1/2” Double Clamp Assembly (Includes #’s 1-4)
	f.	900-3913-32	1/2” Double Clamp Assembly For Steel Lines (Includes #’s 1-4)
	g.	900-3914-03	3/4” Single Clamp Assembly (Includes #’s 1-4)
	h.	900-3914-07	3/4” Double Clamp Assembly (Includes #’s 1-4)
	i.	900-3914-04	1” Single Clamp Assembly (Includes #’s 1-4)
	j.	900-3914-05	1 1/4” Single Clamp Assembly (Includes #’s 1-4)
	k.	900-3914-06	1 1/2” Single Clamp Assembly (Includes #’s 1-4)
6.	a.	900-3914-10	Stacking Bolt for 1/2” Double Clamp (Not Shown)
	b.	900-3920-11	Stacking Bolt for 3/4” Double Clamp (Not Shown)

HOSE GUARD

LOCATION		PART NUMBER	DESCRIPTION
1.	a.	900-3934-76	Hose Guard - 4” Long
	b.	900-3934-77	Hose Guard - 6” Long
	c.	900-3934-78	Hose Guard - 8” Long

FLOW DIVIDER

LOCATION	PART NUMBER	DESCRIPTION
1.	900-3977-41	Flow Divider Body Only
2.	900-3934-30	Flow Divider Cartridge Only

TYPICAL SPRING LOADED CONTROL VALVE

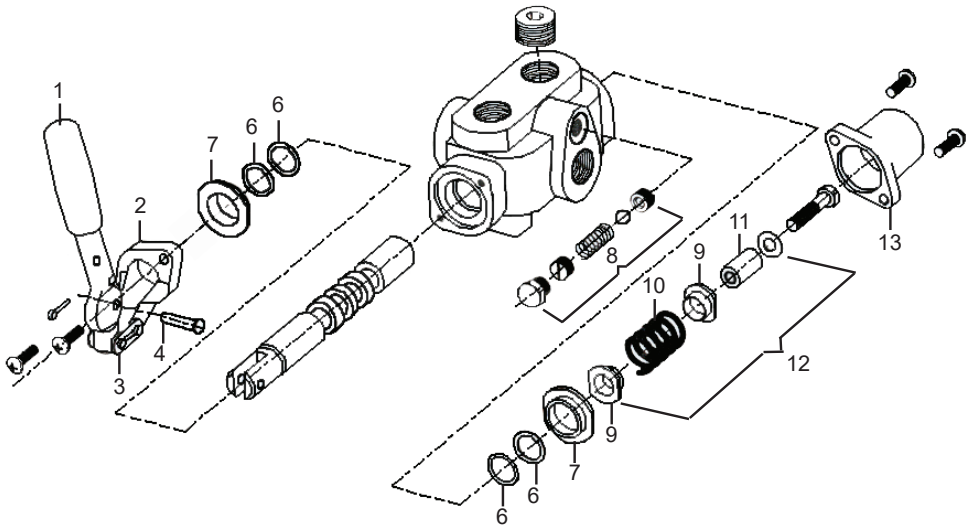

TYPICAL FEEDWHEEL CONTROL VALVES

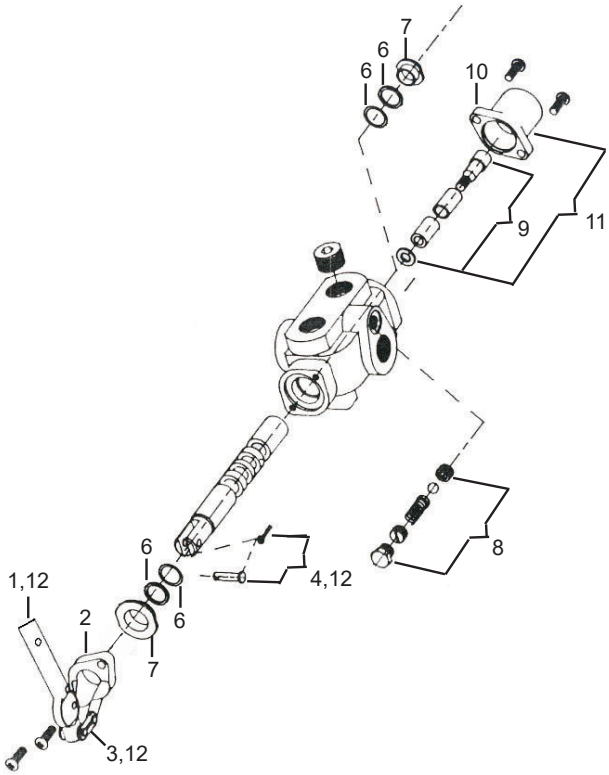

NOTICE Parts may not be exactly as shown.

TYPICAL SPRING LOADED CONTROL VALVE COMPONENTS

LOCATION	PART NUMBER	DESCRIPTION
1.	904-0003-29	Handle Only (Long)
2.	900-3905-95	Valve Bracket Only With Screws
3.	904-0003-30	Master Link Only Control Valve
4.	904-0003-31	Pin And Cotter Key For Control Valve
5.	904-0003-32	Bracket, Handle And Chain Link
		NOTE: INCLUDES #'s 1, 2, 3, 4
6.	900-3937-34	Seal Kit For Control Valve
7.	904-0003-33	Seal Retainer For Control Valve
		NOTE: NOT INCLUDED IN SEAL KIT
8.	900-3901-12	Relief Valve Kit - Spring, Ball, Screw
		NOTE: SOLD ONLY AS A KIT
9.	904-0003-34	Valve Spool Stop For Spring Loaded Valve
10.	904-0003-35	Valve Spool Spring
11.	904-0003-36	Valve Spacer For Yoke Lift Valve
12.	900-A-2941	Spring Center Kit For Spring Loaded Valve
13.	904-0003-37	Detent Cap Only For Spring Loaded Valve (Short)

TYPICAL FEEDWHEEL CONTROL VALVE COMPONENTS

LOCATION	PART NUMBER	DESCRIPTION
1.	900-3905-95H	Handle Only (Short)
2.	900-3905-95	Valve Bracket Only With Screws
3.	904-0003-30	Master Link Only Control Valve
4.	904-0003-31	Pin And Cotter Key For Control Valve
5.	904-0003-32	Bracket, Handle And Chain Link
		NOTE: INCLUDES #'s 1, 2, 3, 4
6.	900-3937-34	Seal Kit For Control Valve
7.	904-0003-33	Seal Retainer For Control Valve
		NOTE: NOT INCLUDED IN SEAL KIT
8.	900-3901-12	Relief Valve Kit - Spring, Ball, Screw
		NOTE: SOLD ONLY AS A KIT
9.	900-3900-71	Detent Kit For Feedwheel Control Valve
		NOTE: SOLD ONLY AS A KIT
10.	900-390071C	Detent Cap Only With Screws (Long)
11.	900-3900-71E	Detent Kit With Cap And Screws
		NOTE: INCLUDES #'s 9 & 10
12.	900-3905-59	Handle, Pin, and Link
		NOTE: INCLUDES #'s 1, 3, & 4

CONTROL VALVES

LOCATION	PART NUMBER	DESCRIPTION
1.	900-3927-73	Yoke Lift Control Valve for Dual Control Yoke Lift
2.	900-3920-01	Winch, Hyd. Swivel Discharge, and Tongue Jack
3.	900-3920-06A	Feedwheel Control Valve With Relief
4.	900-3920-05A	Feedwheel Control Valve Without Relief

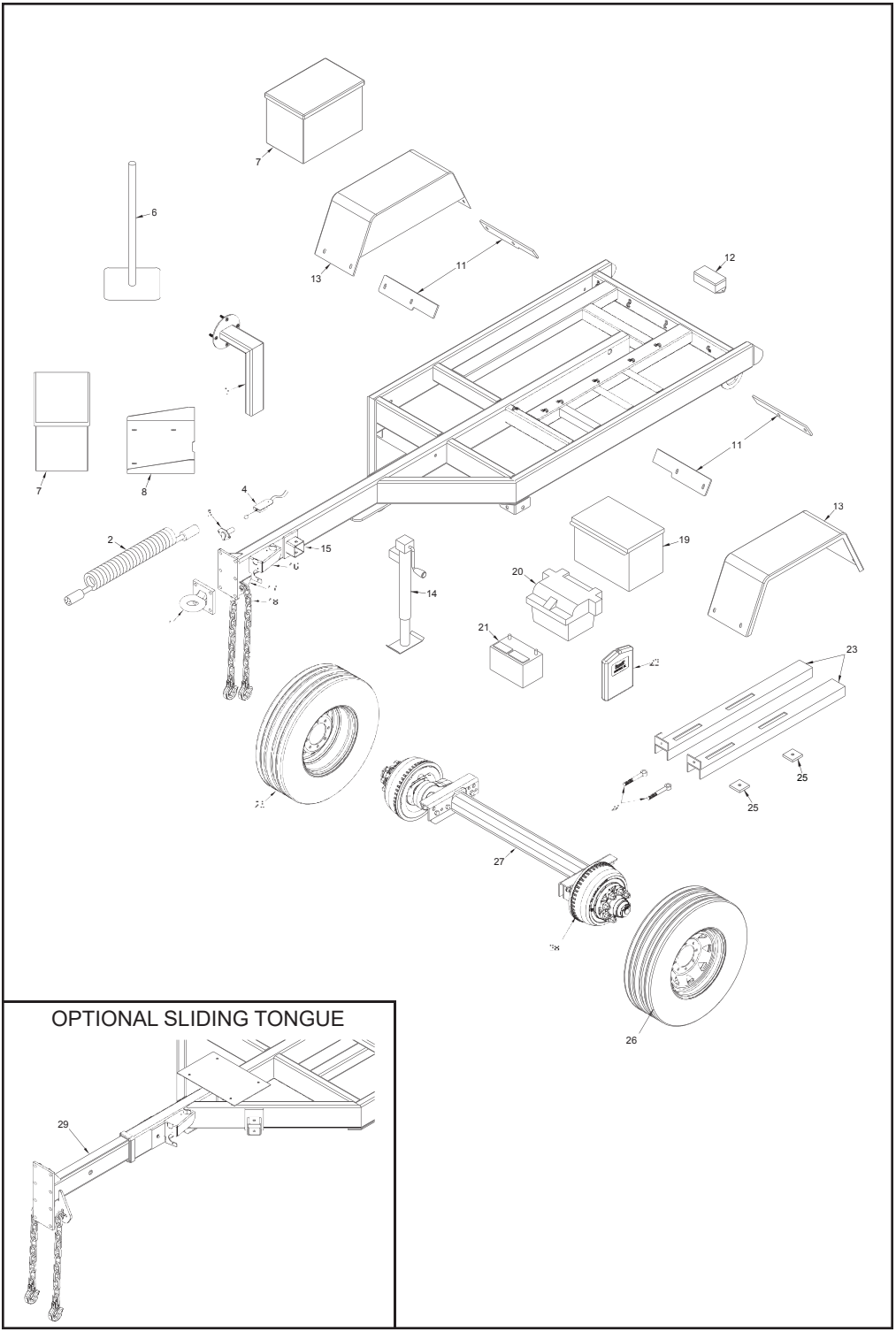

NOTICE Parts may not be exactly as shown.

LOCATION	PART NUMBER	DESCRIPTION
1. a.	900-5900-13	2 1/2” Heavy Duty Pintle Ring Hitch
b.	900-5905-73	3” Heavy Duty Pintle Ring Hitch
c.	980-0505-33	2 5/16” Ball Coupler Assembly
d.	980-0501-47	2” Ball Coupler Assembly
e.	*--*	Other Hitch Options Available
2. a.	900-2916-63	Coil Cable Assembly With 6 Prong Plugs - 15’
b.	900-2904-12	6-Prong Trailer Plug Male Plug Only
3.	900-2904-13	6-Prong Trailer Plug Female Plug Only
4.	900-5900-09	Electrical Breakaway Switch
5.	915-2000-29	Optional Spare Tire Mount
6. a.	980-200202	Optional Cone Holder
b.	980-200215	Optional Bolt-On Cone Holder (Not Shown)
c.	905-2001-03	Optional Weld-On Hoop Style Cone Holder (Not Shown)
d.	911-2001-42	Optional Bolt-On Hoop Style Cone Holder (Not Shown)
e.	900-7900-86	Cap For Cone Holder (Not Shown)
7. a.	900-7900-78	Aluminum Tool Box - 18” Wide
b.	900-7901-63	Aluminum Tool Box - 19” Wide
c.	980-0508-37	Steel Tool Box
8.	980-300407	Tool Box Mount
9. a.	900-2927-86	LED Amber Marker Light - 3/4” Round
b.	900-2915-97	LED Amber Marker Light - Oval
10. a.	900-5904-43	Aluminum Fender
b.	981-2001-08	Right Side Heavy Duty Aluminum Fender
c.	980-0506-81	Right Side Heavy Duty Steel Weld-On Fender
d.	937-2003-68	Heavy Duty Steel Bolt-On Fender
11. a.	911-3001-90	Aluminum Fender Mount - 10,000 lb Axle
b.	911-1002-84	Aluminum Fender Mount - 8000 lb Axle
c.	980-0128-14	Aluminum Fender Mount - 7000 lb Axle
12.	900-2902-41	Junction Box for Wiring
13. a.	900-5904-43	Aluminum Fender
b.	981-2001-08	Left Side Heavy Duty Aluminum Fender
c.	980-0509-23	Left Side Heavy Duty Steel Weld-On Fender
d.	937-2003-68	Heavy Duty Steel Bolt-On Fender
14. a.	900-5908-17	8,000 Lbs. Drop Leg Jack - Zinc
b.	980-1002-12	8,000 Lbs. Jack With HD Castor Wheel - Zinc
c.	900-5908-44	5,000 Lbs. Side Crank Jack - Zinc - Square Mount
15. a.	900-5905-71	Mount For 8,000 Lbs. Drop Leg Jack
b.	980-0127-44	Pin For 8,000 Lbs. Drop Leg Jack (Not Shown)
c.	900-5905-71	Pivot Mount For 5,000 Lbs. Jack - Square Mount
16.	980-300106	Trailer Plug Receptacle Mount
17.	980-0121-31	Safety Chain Holder
18. a.	900-4912-70	Safety Chain With Hooks and Spring Latches for Standard Tongue
b.	900-4908-01	Safety Chain With Hooks and Spring Latches for Telescopic Tongue
c.	900-4905-77	Hook For Safety Chain
19. a.	900-7900-78B	Optional Aluminum Battery Box - 18” Wide
b.	900-7901-63B	Optional Aluminum Battery Box - 19” Wide
c.	914-0501-46	Steel Battery Box for 1400 CCA Battery
20.	900-7900-08	Plastic Battery Liner Box for 1000 CCA Battery

** Order Brake Hub and Drum Assembly According to Axle Type.
(Grease Type, Oil Type, Never Lube Type).
- Engine Rails and Adjusters Will Vary Depending on Engine and Component Options.
Order By Serial Number of Chipper or Physical Description.

NOTICE Other fenders and fender stone shields are optional.

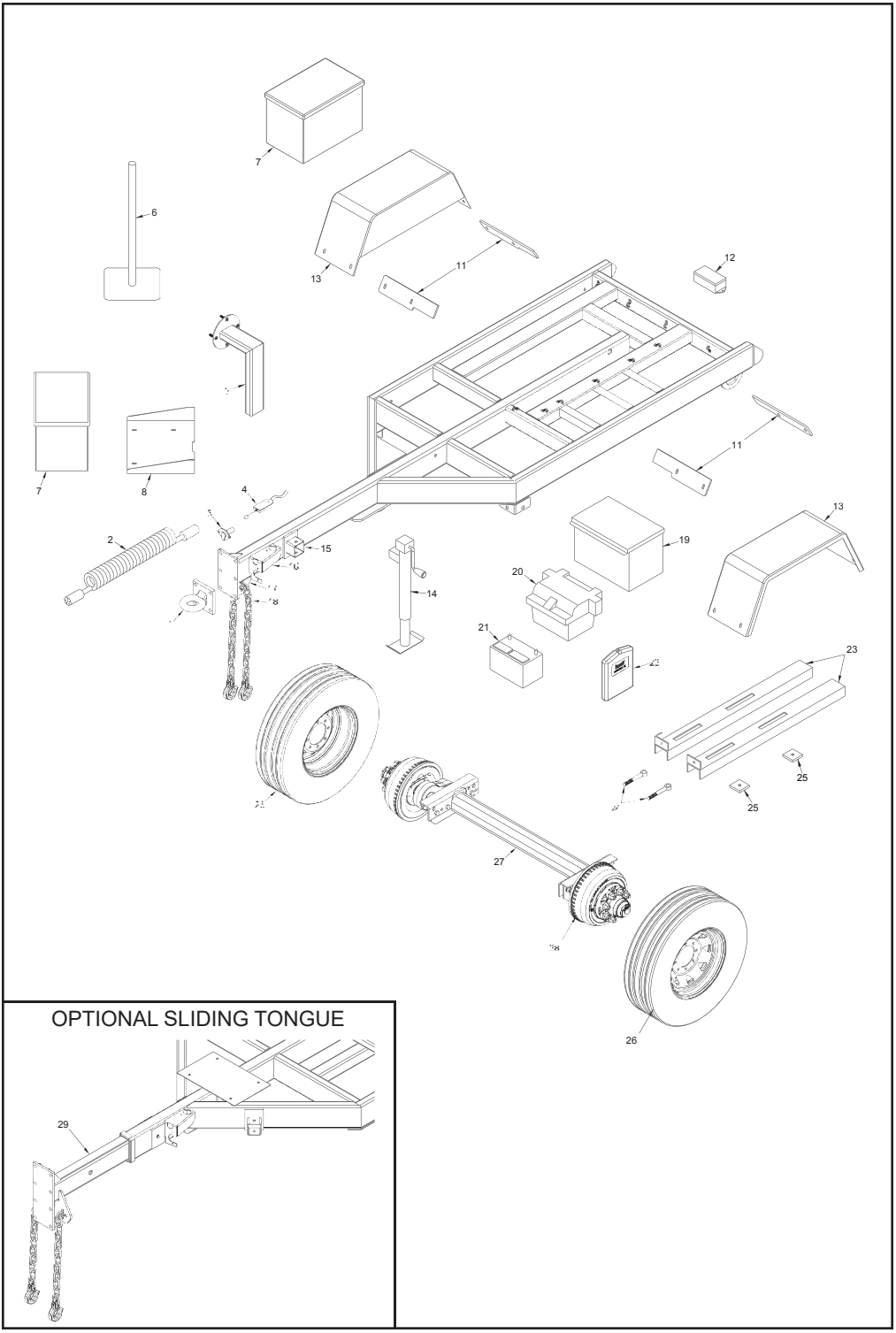

NOTICE Parts may not be exactly as shown.

LOCATION	PART NUMBER	DESCRIPTION
21. a.	900-6915-42	1000 CCA Battery
b.	900-6907-88	1400 CCA Battery
22. a.	900-9910-28	Manual Holder - 8” x 11” x 2”
b.	900-9902-07	Manual Holder - 10” x 12-1/2” x 2” (Stored In Tool Box)
23.	*-*	Engine Rails
24. a.	900-4905-11	Engine Adjuster Rod End - 5/8”-11NC x 6”
b.	900-4902-29	Engine Adjuster Rod End - 1/2”-13NC x 6”
c.	900-4902-28	Engine Adjuster Rod End - 1/2”-13NC x 8 1/2”
25. a.	922-0003-38	Engine Mount Pad For 1/2” Engine Hold Down
b.	980-0101-33	Engine Mount Pad For 5/8” Engine Hold Down
26. a.	900-5904-76	235/75R-17.5” Tire and Solid Gray, 8-Bolt Rim
b.	900-5908-81	235/75R-17.5” Tire and Aluminum, 8-Bolt Rim
c.	900-5904-48	235/75R-17.5” Tire Only
d.	900-5904-49	17” x 6.75” Solid Gray, 8-Bolt Rim Only
e.	900-5908-78	17” x 6.75” Aluminum, 8-Bolt Rim Only
f.	900-5908-39	215/75R-17.5” Tire and Solid Gray, 8-Bolt Rim (Start 8/06)
g.	900-5908-80	215/75R-17.5” Tire and Aluminum, 8-Bolt Rim
h.	900-5903-54	215/75R-17.5” Tire Only
i.	900-5905-03	235/85R-16” Tire and White Spoke, 8-Bolt Rim (Pre 8/06)
j.	900-5905-01	235/85R-16” Tire Only
k.	900-5904-22	16” x 6” White Spoke, 8-Bolt Rim Only
27. a.	900-5910-70	10,000 Lb. Torflex Axle Assembly - Electric Brake (0° Down Trail) (Models 15XP/1390HD) (Start 9/12)
b.	900-5910-23	10,000 Lb. Torflex Axle Assembly - Electric Brake (45° Down Trail) (Models 15XP/1390HD) (Start 9/12)
c.	900-5910-65	10,000 Lb. Leaf Spring Assembly - Electric Brake (Models 15XP/1390HD) (Start 9/12)
d.	900-5910-25	8,000 Lb. Torflex Axle Assembly - Electric Brake (Model 1390STD) (Start 9/12)
e.	900-5909-36	8,000 Lb. Torflex Axle Assembly - Electric Brake (Model 1390STD) (Start 9/12)
f.	900-5905-60	7,000 Lb. Torflex Axle Assembly - Electric Brake (Pre 6/12)
28.	**	Brake Hub and Drum Assembly
29.	981-0501-18	Telescopic Tongue Assembly - 20” Adjustment
30.	900-2915-98	LED Red Marker Light - Oval (Not Shown)
31. a.	980-0508-25	Optional Wheel Chock Holders Aluminum Bolt-On (Not Shown)
b.	980-0118-61	Optional Wheel Chock Holders Metal Weld-On (Not Shown)
32.	900-5902-32	Optional Rubber Wheel Chock (Not Shown)
33.	900-5904-52	Optional Safety Marker For Fenders (Not Shown)
34.	900-7900-48	Optional Mud Flap (Not Shown)
35. a.	900-9904-94	Optional Vice (Not Shown)
b.	980-300113	Optional Weld-On Vice Mount (Not Shown)
36. a.	900-5904-59	5/8”-18NF Wheel Flange Nut
b.	900-5910-82	9/16”-18NF Cone Nut

** Order Brake Hub And Drum Assembly According To Axle Type.
(Grease Type, Oil Type, Never Lube Type).
- Engine Rails And Adjusters Will Vary Depending On Engine And Component Options.
Order By Serial Number Of Chipper Or Physical Description.

NOTICE Other fenders and fender stone shields are optional.

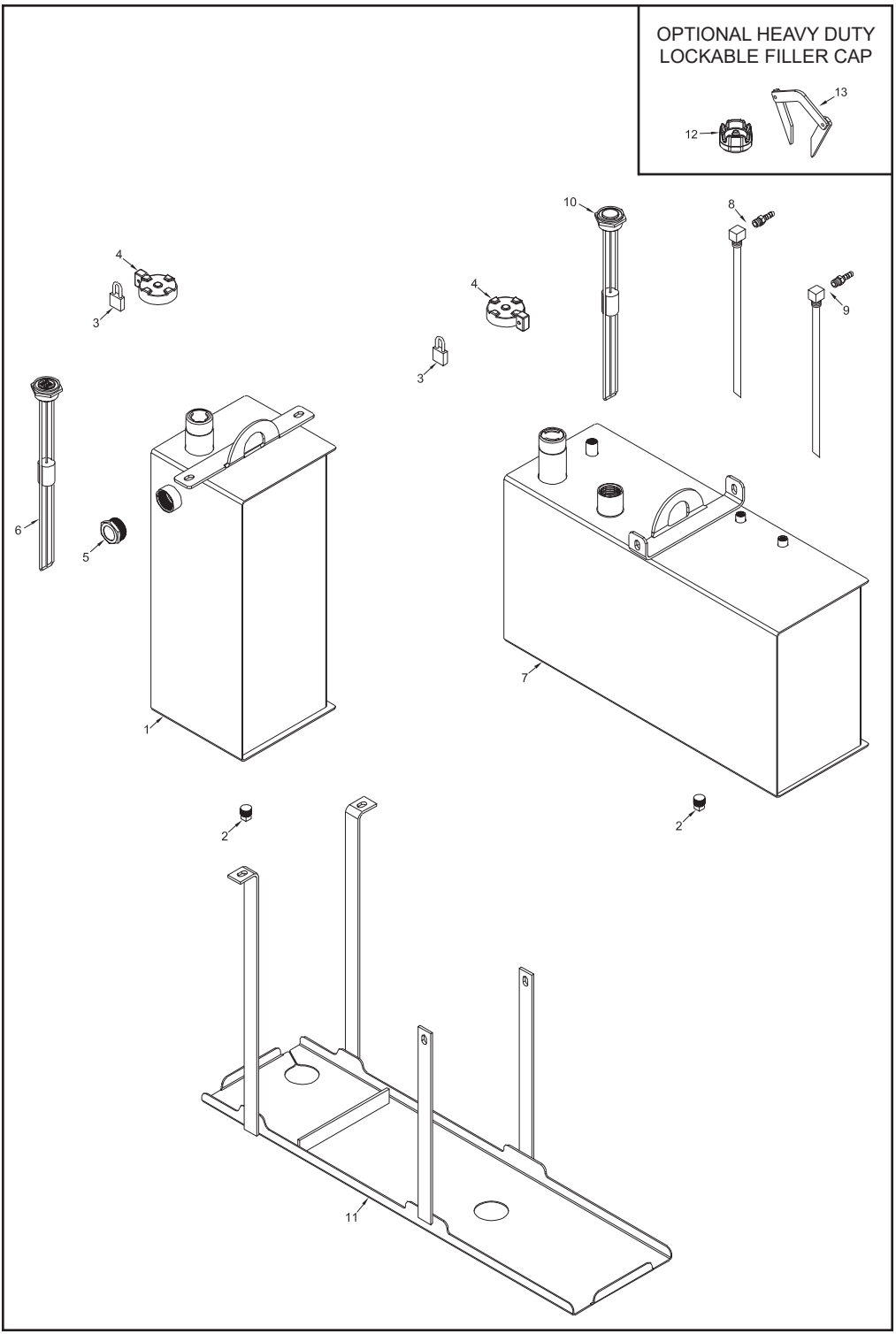

NOTICE Parts may not be exactly as shown.

LOCATION		PART NUMBER	DESCRIPTION
1.	a.	909-1000-25	12 Gallon Rectangle Hydraulic Tank Assembly (Includes 2 - 5)
	b.	909-2000-08	12 Gallon Rectangle Hydraulic Tank Assembly
2.		900-3922-60	Magnetic Drain Plug
3.	a.	900-4912-40	Padlock With Short Shackle For Tank With Locking Cap
	b.	900-4917-21	Key For Padlock (Not Shown)
4.	a.	900-3934-55	Hydraulic Locking Fill Cap - Black
	b.	900-3934-56	Fuel (Diesel) Locking Fill Cap - Green
	c.	900-3966-01	Fuel (Gasoline) Locking Fill Cap - Red
	d.	900-3935-06	Keeper for Locking Fill Cap (Not Shown)
5.		900-3975-03	Sight Gauge (Start 10/15)
6.	a.	900-2903-93	Rochester Sight Gauge (Pre 10/15)
	b.	900-2903-55	Face For Sight Gauge Only
7.	a.	909-1000-24	24 1/2 Gallon Fuel Tank (Includes 2 - 4, 8 - 10)
	b.	909-2000-21	24 1/2 Gallon Fuel Tank
	c.	915-1000-45	Optional 40 Gallon Fuel Tank (Includes 2 - 4, 8 - 10)
	d.	915-2000-26	Optional 40 Gallon Fuel Tank
8.	a.	900-3926-84	Suction Drop Pipe Ass'y Without Hose Barb (1/2" NPTF Male x 3/8" NPTF Female)
	b.	900-3926-83	3/8" NPTF To 1/2" Hose Barb
	c.	900-3926-82	3/8" NPTF To 3/8" Hose Barb
	d.	900-3931-53	3/8" NPTF To 5/16" Hose Barb
9.	a.	900-3909-00	Return Drop Pipe Ass'y Without Hose Barb (3/8" NPTF Male x 1/4" NPTF Female)
	b.	900-3925-48	1/4" NPTF To 3/8" Hose Barb
	c.	900-3909-01	1/4" NPTF To 5/16" Hose Barb
	d.	900-3909-02	1/4" NPTF To 1/4" Hose Barb
	e.	900-3943-22	3/16" NPTF To 3/16" Hose Barb
	f.	900-3943-21	1/4" NPTF To 3/16" NPTF Bushing
10.	a.	900-2903-95	Rochester Sight Gauge For 24 1/2 Gallon Rectangle Fuel Tank
	b.	900-0104-95	Rubber Tank Pad (Not Shown)
	c.	900-7900-35	Tank Cushion Material (Not Shown)
11.		909-2000-23	Tank Tray Assembly
12.		900-3917-71	Optional Fill Cap Only No Dipstick (Steel Tank)
13.		980-0506-85	Optional Fill Cap Lock Assembly For Steel Tank With 900-3917-71 Fill Cap

NOTICE Components vary with fuel type. Specify gas or diesel when ordering fuel tank components.

NOTICE Tank assemblies vary with options. Specify all options when ordering.

DINAMIC WINCH

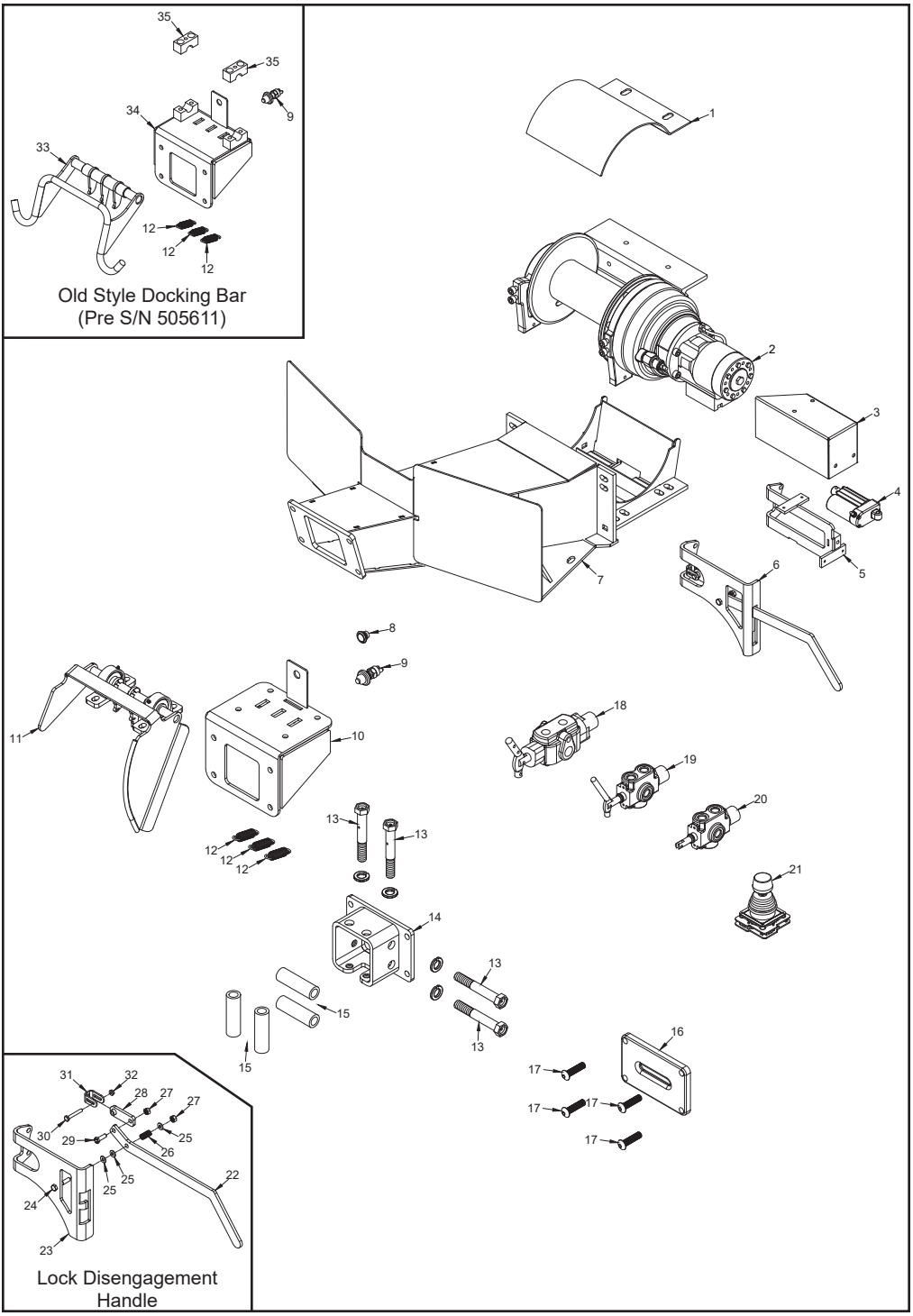

NOTICE Parts may not be exactly as shown.

DINAMIC WINCH

LOCATION	PART NUMBER	DESCRIPTION
1.	980-3012-41	Winch Spool Cover
2.	900-3974-40	Winch
3.	980-3012-51	Electric Actuator Cover
4.	900-2930-89	Electric Actuator
5.	980-2004-22	Electric Actuator Mount
6.	980-2004-90	Lock Disengagement Handle Assembly
7. a.	980-2004-14	Winch Tunnel
b.	911-3005-87	Decal Plate
8.	900-2927-86	Feed Deactivate Light
9.	900-2903-07	Limit Switch
10.	980-2005-14	Winch Switch Frame
11.	980-2005-35	Winch Line Docking Bar
12.	900-4919-82	Spring
13. a.	900-4902-27	Winch Roller Bolt
b.	900-4907-17	3/4” Lock Washer
14.	980-0505-82	Winch Roller Assembly (Includes 12 - 13)
15.	914-1004-18	Winch Roller
16.	980-3011-25	Fairlead
17.	900-4923-41	1/2”-13NC x 2” Plated Button Head Cap Screw
18.	900-3920-01	Winch Valve
19. a.	900-3936-39	Winch Selector Control Valve
b.	900-3936-40	5/16” Replacement Stud For Selector Valve
20. a.	900-3956-26	Momentary Feed Valve
b.	905-3002-14	Push Plate for Momentary Feed Switch (Not Shown)
c.	900-2903-07	Momentary Feed Push Button Switch (Not Shown)
21.	900-2931-26	Feed Assist Joystick
22.	980-3014-34	Lock Disengagement Handle
23.	980-3014-33	Lock Disengagement Handle Mount
24.	900-4910-78	5/16”-18NC x 1 3/4” Hex Head Bolt
25.	900-4903-59	1/4” Flat Washer
26.	900-4921-85	Spring
27.	900-4906-45	5/16”-18NC Nut
28. a.	980-3014-35	Lock Disengagement Linkage
b.	980-3014-36	Linkage Bushing
29.	900-4906-37	5/16”-18 x 1” Hex Head Bolt
30.	900-4913-36	1/4”-20NC x 1 3/4” Hex Head Bolt
31.	980-3012-62	Lock Disengagement Clevis
32.	900-4906-32	1/4”-20NC Nut
33.	980-2004-48	Winch Line Docking Bar
34.	980-2004-47	Winch Switch Frame
35. a.	980-2004-51	Bearing Block
b.	900-4900-06	Grease Zerk

NOTICE **Nuts, bolts, washers, and all other components can be ordered by physical description.**

RKI WINCH

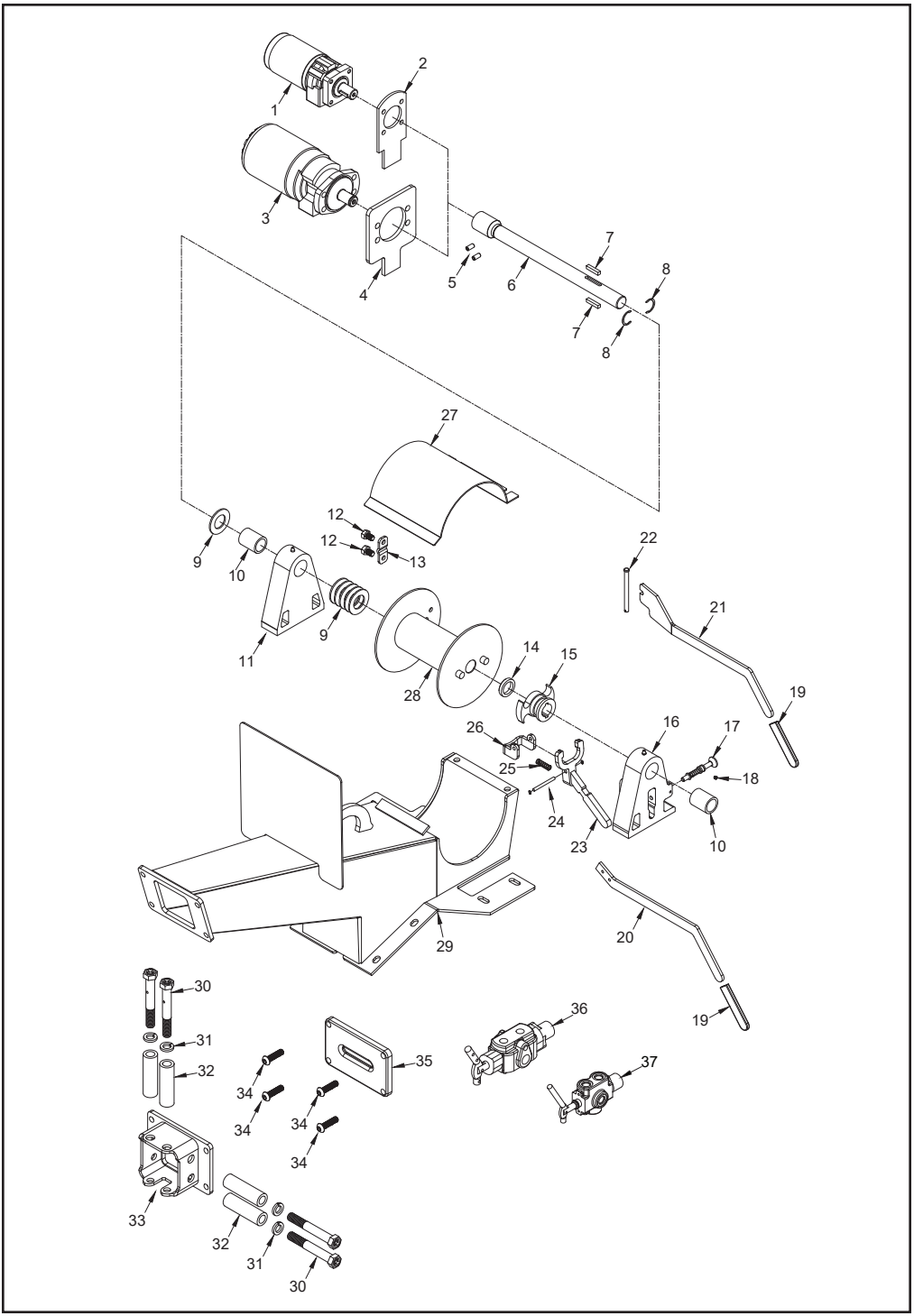

NOTICE Parts may not be exactly as shown.

RKI WINCH

LOCATION	PART NUMBER	DESCRIPTION
1. a.	900-3972-06	Winch Hydraulic Motor (SAE O-ring) “TE” - Square
b.	900-3973-28	Winch Hydraulic Motor (Pipe Fitting) “TE” - Square
2.	981-1001-01	Winch Motor Torque Arm For “RS/TE” Motor
3.	900-3973-39	Winch Hydraulic Motor (SAE O-ring) “TG” - Round
4.	955-1011-71	Winch Motor Torque Arm For “RE/TG” Motor
5.	900-4910-65	3/8”-16NC x 3/8” Cup Point Socket Set Screw
6. a.	980-900002	Winch Shaft Only
b.	900-3905-22	Winch Shaft With Keys
7.	900-3962-42	Winch Shaft Key
8.	900-3963-08	Retaining Ring
9.	900-3963-29	Thrust Washer
10.	900-1915-24	Bronze Bushing For A Frame Arm
11.	910-1000-08	Steel Winch A Frame Arm (Includes 10)
12.	900-3965-33	Rope/Line Clamp Bolt - 1/2”-13NC x 3/4” Hex Head Bolt
13.	900-3965-32	Rope/Line Clamp
14.	900-3966-71	Clutch Spacer
15.	900-3905-17	Winch Clutch
16.	910-1000-07	Steel Winch A Frame Arm (Includes 10)
17.	900-3905-14	Winch Release Lever Pin Assembly
18.	900-3970-52	Set Screw for Winch Release Lever Pin
19.	900-9904-59	Vinyl Cap for Handle Extension (If Applicable)
20.	955-300376	Winch Shift Lever Extension (If Applicable)
21.	955-300377	Lock Pin Handle Extension (If Applicable)
22.	900-4913-00	Pivot Pin For Winch Handle Extension (If Applicable)
23. a.	900-3959-59	Winch Shift Lever Only
b.	900-3905-16	Winch Shift Lever (Includes 25 & 26)
24. a.	900-3961-21	Winch Pin for Brake Assembly
b.	900-3958-59	Snap Ring for Winch Pin
25.	900-3958-61	Winch Spring
26.	900-3964-49	Winch Brake Shoe Only
27.	980-300260	Winch Drum Cover
28. a.	900-3905-19	Winch Drum (Includes Bushings)
b.	900-3963-28	Bushing Only For Winch Drum (Not Shown)
29. a.	980-200162	Winch Tunnel Assembly
b.	980-3009-01	Mount Plate
c.	980-0137-82	Decal Plate
30.	900-4902-27	Winch Roller Bolt
31.	900-4907-17	3/4” Lock Washer
32.	914-1004-18	Winch Roller
33.	980-0505-82	Winch Roller Assembly (Includes 30 - 32)
34.	900-4923-41	1/2”-13NC x 2” Plated Button Head Cap Screw
35.	980-3011-25	Fairlead
36. a.	900-3920-01A	Winch Valve (SAE O-rings)
b.	900-3901-42	Winch Valve (Pipe Fittings)
37. a.	900-3936-39	Winch Selector Control Valve (Replaces 900-3920-58) (SAE O-ring)
b.	900-3913-41	Winch Selector Control Valve (Pipe Fitting)
c.	900-3936-40	5/16” Replacement Stud For Selector Valve (900-3936-39)
d.	900-3924-48	1/4” Replacement Stud For Selector Valve (900-3920-58 & 900-3913-41)
38.	904-0002-60	Winch Kit - Specify Fairlead or Rollers (Includes 1 - 18, 23 - 29)

NOTICE **Nuts, bolts, washers, and all other components can be ordered by physical description.**

HYDRAULIC ACTIVATED LAST CHANCE

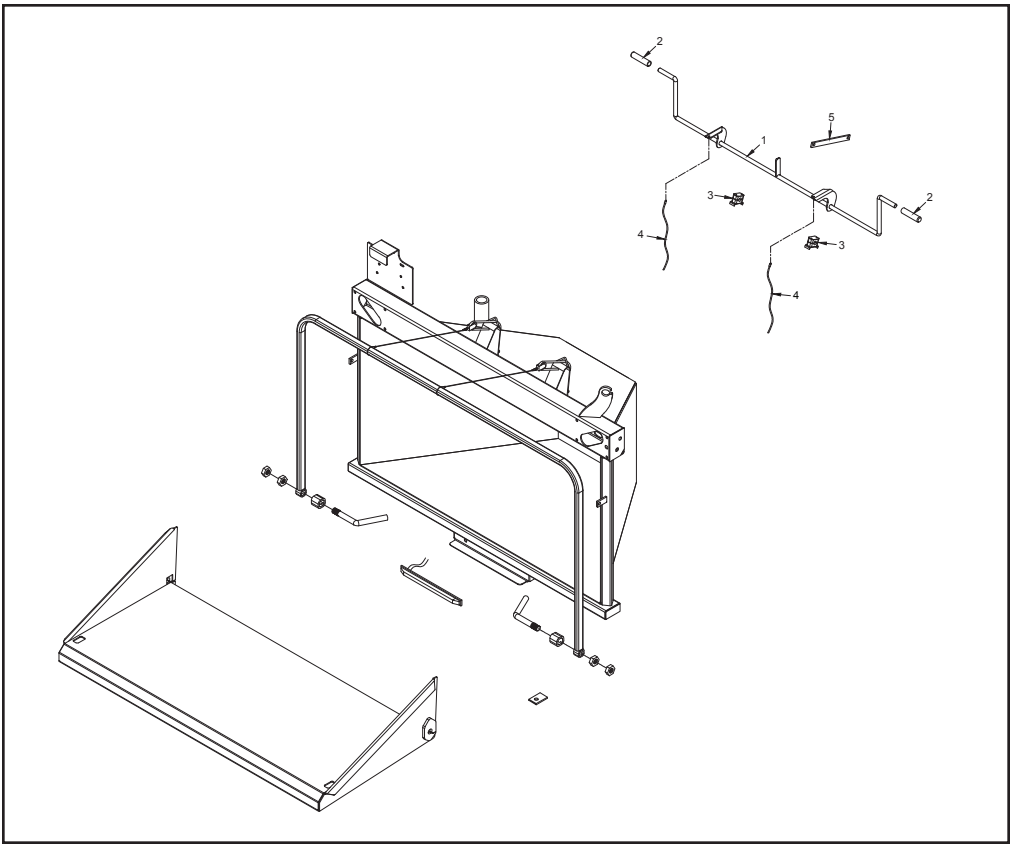

LOCATION	PART NUMBER	DESCRIPTION
1.	980-300185	Hydraulic Last Chance Control Bar
2. a.	900-7900-96	Vinyl Grip - Black
b.	900-7901-41	Vinyl Grip - Yellow
3.	900-3914-02	Control Bar Pivot Bracket
4.	900-4907-43	Cables
5.	955-300054	Linkage

NOTICE **Nuts, bolts, washers, and all other components can be ordered by physical description.**

NOTICE Parts may not be exactly as shown.

HYDRAULIC ACTIVATED LAST CHANCE

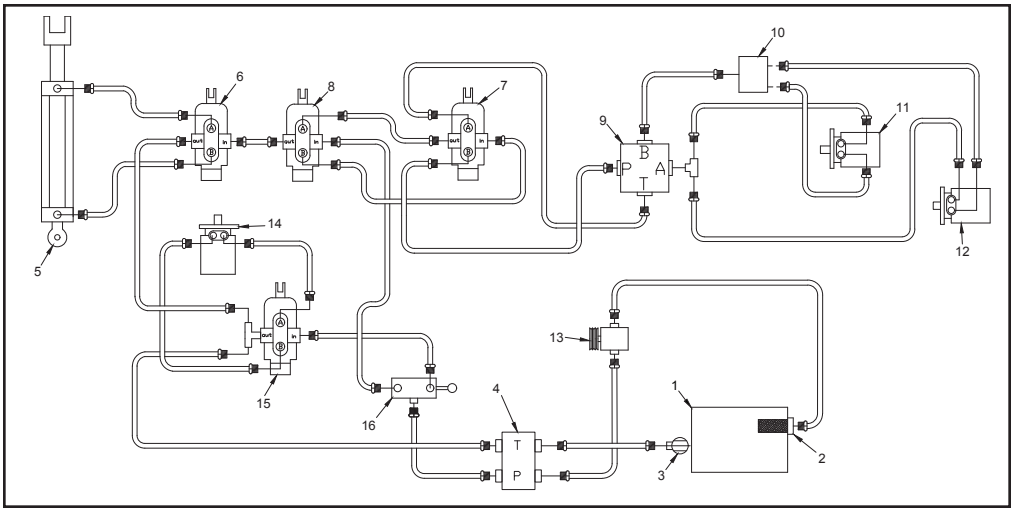

LOCATION	PART NUMBER	DESCRIPTION
1.	See Pages 126 - 127	Hydraulic Tank
2.	900-3951-22	Hydraulic Tank Strainer
3. a.	900-3900-09	Filter Head
b.	900-3900-10	Filter
4.	See Page 116	Relief Block
5. a.	900-3925-04	Yoke Lift Cylinder - Welded
b.	904-0007-14	Pin For Welded Cylinder (Not Shown)
c.	904-0006-90	Seal Kit - Welded Lift Cylinder (Not Shown)
6.	900-3927-73	Yoke Lift Control Valve For Dual Control Yoke Lift
7.	900-3954-43	Hydraulic Activated Last Chance Valve
8.	900-3920-05A	Feedwheel Control Valve Without Relief - SAE O-ring
9.	See Page 117	Reversing “Autofeed Plus”
10.	See Pages 118 - 119	Flow Divider
11. a.	900-3973-17	Top Feedwheel Hydraulic Motor (Models 15XP/1390HD)
b.	900-3972-04	Top Feedwheel Hydraulic Motor (Model 1390STD)
12. a.	900-3973-16	Bottom Feedwheel Hydraulic Motor (Models 15XP/1390HD)
b.	900-3972-05	Bottom Feedwheel Hydraulic Motor (Model 1390STD)
13.	**	Hydraulic Pump
14.	900-3921-57	Winch Motor (Optional)
15.	900-3920-01	Winch Control Valve (Optional)
16.	900-3936-39	Winch Selector Control Valve (Optional)

** Hydraulic components, fittings, hoses will vary depending on optional equipment. Order by physical description.
** Hydraulic pumps need to be ordered by physical description and serial number of machine.

NOTICE Make sure to order components according to fitting type, fittings may vary on all components.

NOTICE Parts may not be exactly as shown.

HYDRAULIC TONGUE JACK

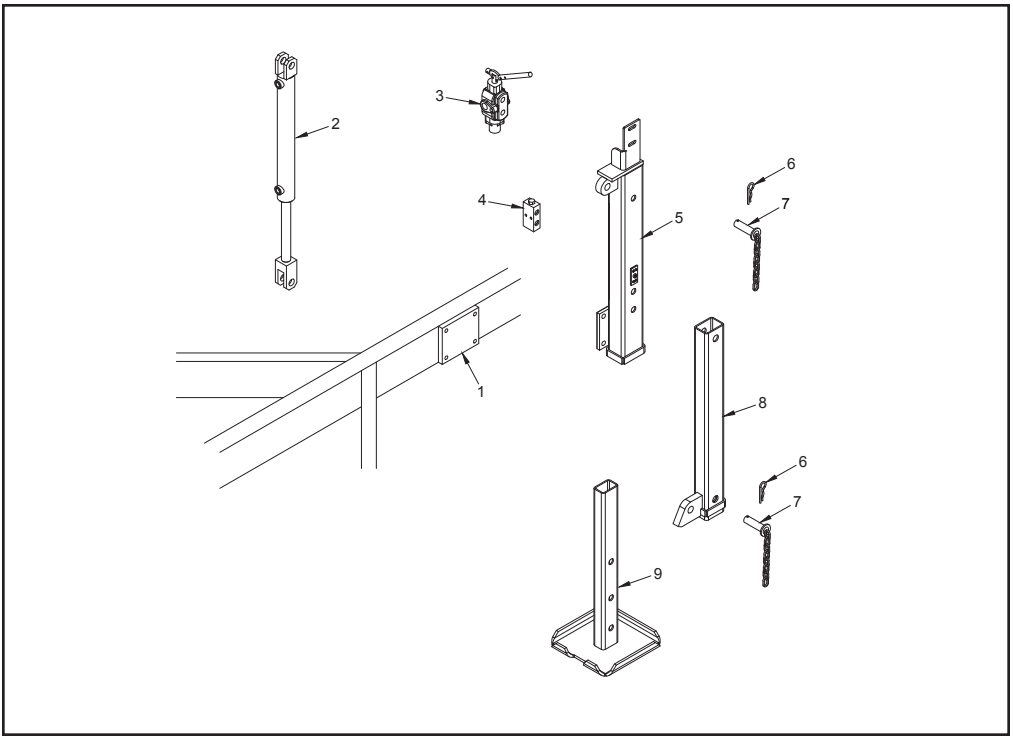

LOCATION	PART NUMBER	DESCRIPTION
1.	920-300340	Tongue Jack Mount Plate
2. a.	900-3934-24	Tongue Jack Cylinder - Welded
b.	904-0007-14	Pin For Welded Cylinder (Not Shown)
3. a.	900-3920-01	Tongue Jack Valve (SAE O-rings)
b.	900-3901-42	Tongue Jack Valve (Pipe Fittings)
4.	900-3949-09	Check Valve
5.	--	Outside Tube Assembly
6.	900-4907-60	Cotter Hair Pin
7.	914-1000-38	Lock Pin
8.	980-0131-50	Inside Tube Assembly
9.	980-0509-53	Drop Leg Foot Pad Assembly
10.	980-0509-00	Bolt-On Hydraulic Tongue Jack Kit (Includes #'s 1 - 9)

NOTICE Parts may not be exactly as shown.

PIVOTING TONGUE

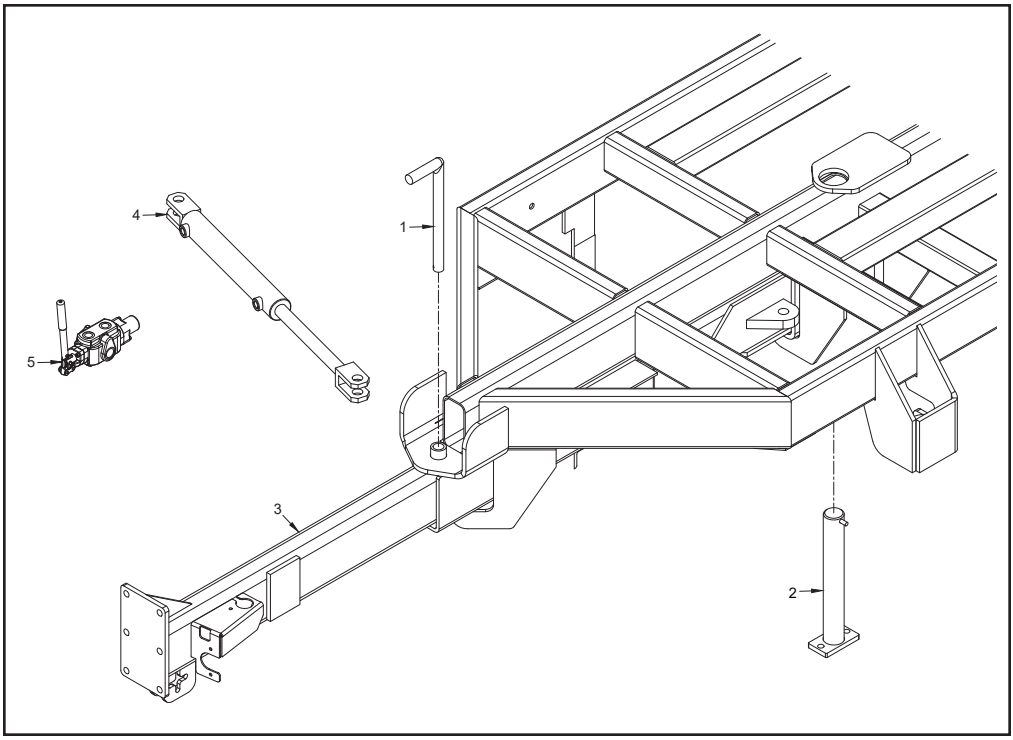

LOCATION	PART NUMBER	DESCRIPTION
1.	955-1015-32A	Pivoting Lock Pin
2.	980-0510-37	Pivoting Tongue Pin
3.	980-0510-45	6” Pivoting Tongue Assembly
4.	900-3906-27	Pivoting Tongue Cylinder
5. a.	900-3920-01	Pivoting Tongue Valve (SAE O-Rings)
b.	900-3901-42	Pivoting Tongue Valve (Pipe Fittings)

NOTICE **Nuts, bolts, washers, and all other components can be ordered by physical description.**

NOTICE Parts may not be exactly as shown.

HYDRAULIC BUMP BAR Version 2

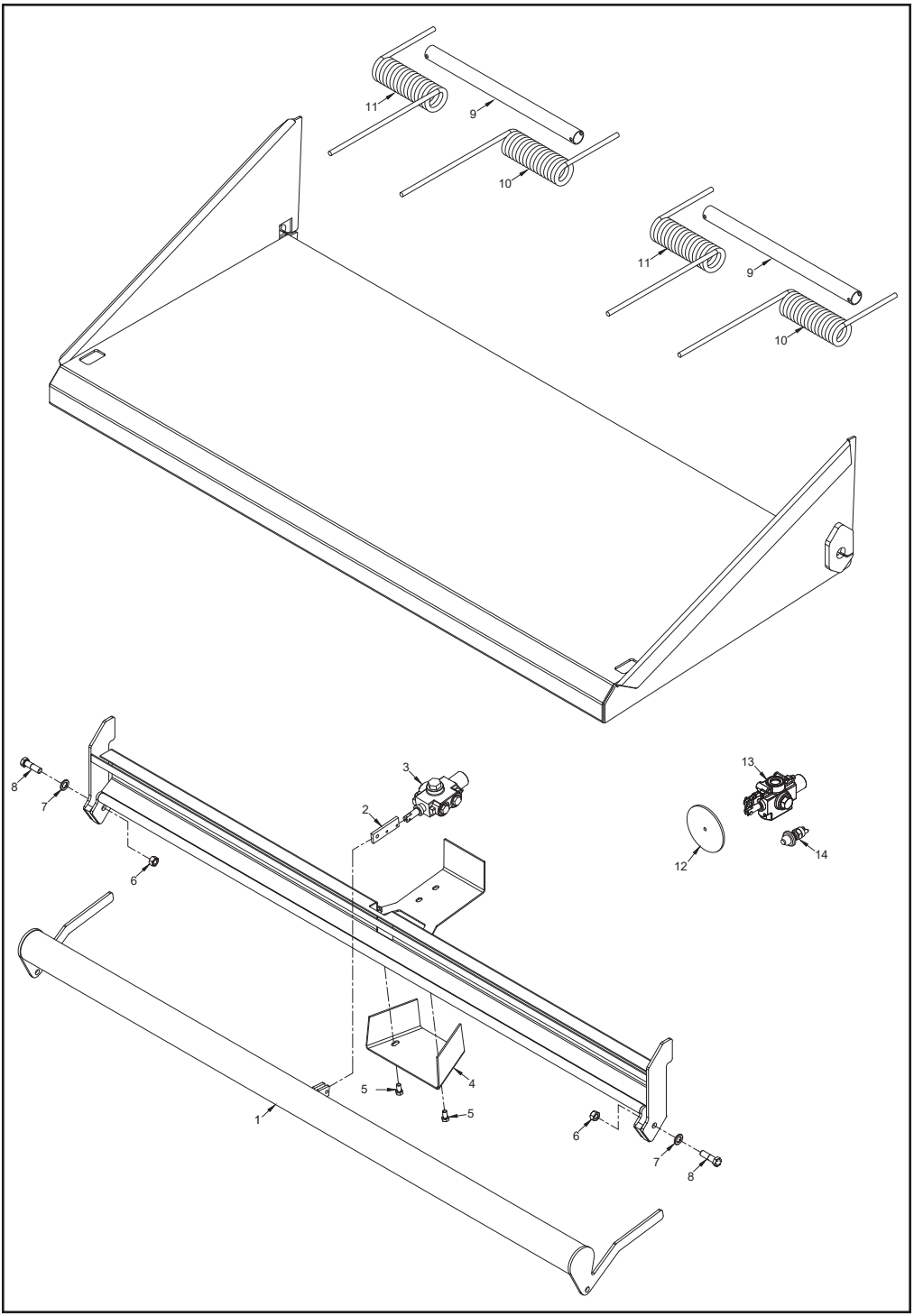

NOTICE Parts may not be exactly as shown.

HYDRAULIC BUMP BAR Version 2

LOCATION	PART NUMBER	DESCRIPTION
1. a.	980-2005-44	Hydraulic Bump Bar Assembly - 35”
b.	626-2002-07	Hydraulic Bump Bar Assembly - 42”
c.	980-2005-39	Hydraulic Bump Bar Assembly - 45”
d.	915-2000-73	Hydraulic Bump Bar Assembly - 54”
e.	911-2002-52	Hydraulic Bump Bar Assembly - 64”
2.	911-3003-66	Bump Bar Valve Linkage
3.	900-3956-74	Bump Bar Valve
4.	915-3002-17	Bump Bar Valve Cover
5.	900-4906-54	3/8”-16NC x 3/4” Bolt
6.	900-4906-84	1/2”-13NC Lock Nut
7.	900-4906-88	1/2” Flat Washer
8.	900-4906-73	1/2”-13 x 1 3/4” Bolt
9. a.	980-3011-43	Spring Tube for Spring Assist - Single Springs
b.	937-3009-68	Spring Tube for Spring Assist - Double Springs (64” Infeed Tray Only)
10.	900-4917-76	Left Spring for Spring Assist
11.	900-4917-77	Right Spring for Spring Assist
12.	905-3002-14	Push Plate for Momentary Override Switch
13.	900-3956-26	Momentary Override Valve
14. a.	900-2903-07	Momentary Override Push Button Switch
b.	999-8001-88	Momentary Override Timer (Not Shown)

HYDRAULIC BUMP BAR

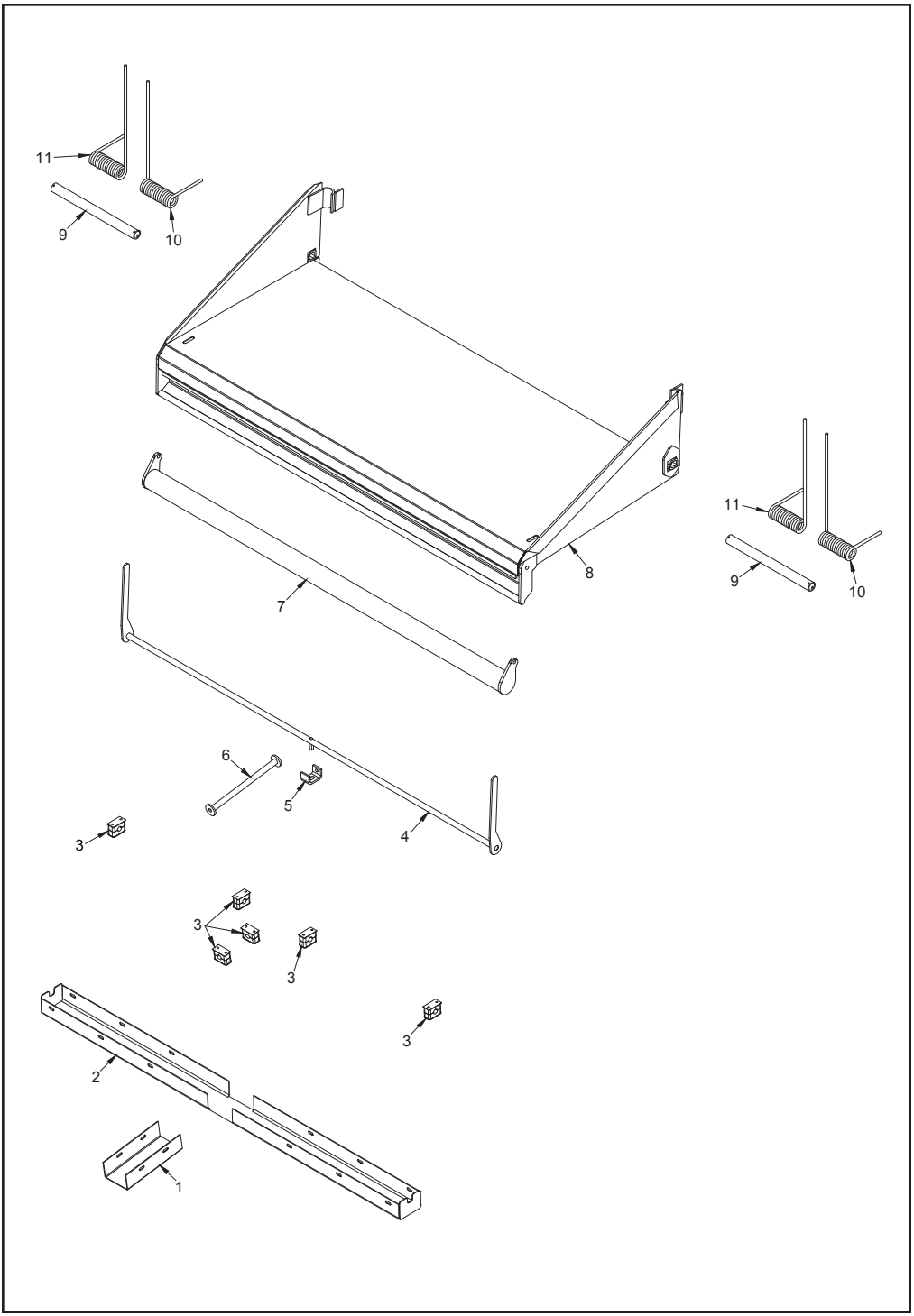

NOTICE Parts may not be exactly as shown.

HYDRAULIC BUMP BAR

LOCATION		PART NUMBER	DESCRIPTION
1.		905-3001-99	Valve Push Bar Cover
2.	a.	980-2003-42	Reset Pivot Handle Cover Assembly - 35”
	b.	626-2001-29	Reset Pivot Handle Cover Assembly - 42”
	c.	905-2000-57	Reset Pivot Handle Cover Assembly - 45”
	d.	917-2000-22	Reset Pivot Handle Cover Assembly - 54”
	e.	911-2001-18	Reset Pivot Handle Cover Assembly - 64”
3.		900-3914-02	Clamp
4.	a.	980-2003-41	Reset Pivot Handle Assembly - 35”
	b.	626-2001-30	Reset Pivot Handle Assembly - 42”
	c.	905-2000-58	Reset Pivot Handle Assembly - 45”
	d.	917-2000-23	Reset Pivot Handle Assembly - 44”
	e.	911-2001-17	Reset Pivot Handle Assembly - 64”
5.		905-3002-08	Bump Bar Trip Bracket
6.		905-2000-59	Valve Push Bar Assembly
7.	a.	980-2003-40	Hydraulic Bump Bar Assembly - 35”
	b.	626-2001-28	Hydraulic Bump Bar Assembly - 42”
	c.	905-2000-50	Hydraulic Bump Bar Assembly - 45”
	d.	917-2000-19	Hydraulic Bump Bar Assembly - 54”
	e.	911-2000-99	Hydraulic Bump Bar Assembly - 64”
8.	a.	980-2003-37	Bump Bar Infeed Tray Assembly - 35”
	b.	626-2001-26	Bump Bar Infeed Tray Assembly - 42”
	c.	905-2000-56	Bump Bar Infeed Tray Assembly - 45”
	d.	917-2000-20	Bump Bar Infeed Tray Assembly - 54”
	e.	911-2001-13	Bump Bar Infeed Tray Assembly - 64”
9.	a.	980-3011-43	Spring Tube for Spring Assist - Single Spring (Start 4/14)
	b.	980-0129-86	Spring Tube for Spring Assist - Single Spring (Pre 4/14)
	c.	937-3009-68	Spring Tube for Spring Assist - Double Springs (Start 4/14)
	d.	980-3010-34	Spring Tube for Spring Assist - Double Springs (Pre 4/14)
10.	a.	900-4917-76	Left Spring for Spring Assist (Start 4/14)
	b.	900-4905-39	Left Spring for Spring Assist (Pre 4/14)
	c.	900-4908-70	“HD” Left Spring for Spring Assist (Pre 4/14)
11.	a.	900-4917-77	Right Spring for Spring Assist (Start 4/14)
	b.	900-4905-40	Right Spring for Spring Assist (Pre 4/14)
	c.	900-4908-71	“HD” Right Spring for Spring Assist (Pre 4/14)
12.		900-3956-74	Bump Bar Valve (Not Shown)
13.	a.	900-3956-26	Momentary Override Valve (Not Shown)
	b.	905-3002-14	Push Plate for Momentary Override Switch (Not Shown)
	c.	900-2903-07	Momentary Override Push Button Switch (Not Shown)
	d.	999-8001-88	Momentary Override Timer (Not Shown)

SERVICE RECORD

DATE	DESCRIPTION	AMOUNT

HAND FED

BANDIT CONTROLS

(FUEL SAVER)

(RADIO)

(WINCH w/ FEED ASSIST)

(DUMP VALVE)

(BUMP BAR)

Main Page

To Start, turn key to ON position. In cold weather the engine may pre heat glow plugs or heater grid and the WAIT TO START symbol will appear on the splash screen. When pre heat is complete the Display will continue to Main Page.

The fuse box may have a foam retainer under the cover to help hold the relays in place. The fuse decal is located under the foam.

The control panel is equipped with an Anti-Restart key switch to prevent grinding the starter while the engine is running. If the engine does not start immediately, it may be necessary to cycle the key back to the OFF position, wait 15-20sec (allow engine ECU time to shut down), and then go through the starting sequence again.

To turn off AutoFeed and run auxiliary functions at startup, navigate to the Mode page on the display and see instructions below on pages 3 and 4.

Main Page

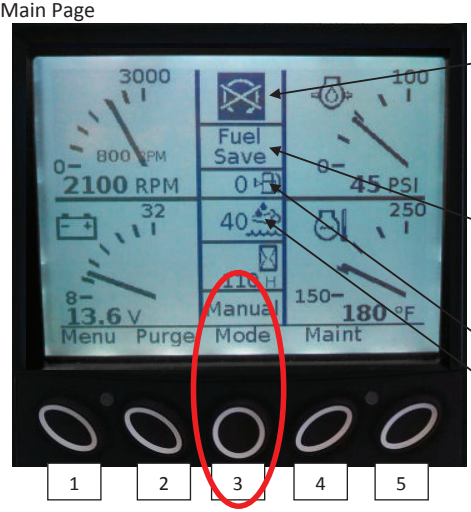

Blinking indicates that the system has E-Stopped the engine.
- Hood Pin removed
- E-Stop depressed (if equipped)

Fuel Save Status: indicates that Fuel Save mode is selected, and if "Save" is blinking the system is idled down to save fuel.

Fuel Level 0-100% (if equipped)

DEF Level 0-100% (applicable T4 engines)

2. Press 'Purge' button to trigger a reverse cycle on the radiator fan (if equipped).
3. Press this button to Navigate to the Mode page and select Radio or Tether operating mode.
(On Displays with software version 57193_D1 (19Jun2015) and later, the Display automatically returns to this Main Engine page 60sec after last button press).

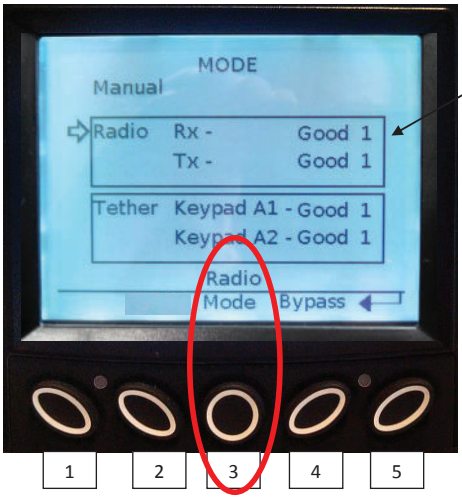

Fault Status of the Radio and Tether:
1=Good communication
0=Communication Fault

Press the Mode button to select between Manual, Radio, or Tether operating mode.

Lost Communication:
If Controller 1 (C1) loses communication with the Display, C1 will default to Radio mode.
If C1 loses comm with the Display AND the radio receiver, it will default to Tether Mode.
If C1 loses comm with display and receiver and tether, it will remain in Manual mode internally. Manual Mode still allows the operator to at least start and idle and override valves manually.

Mode Page

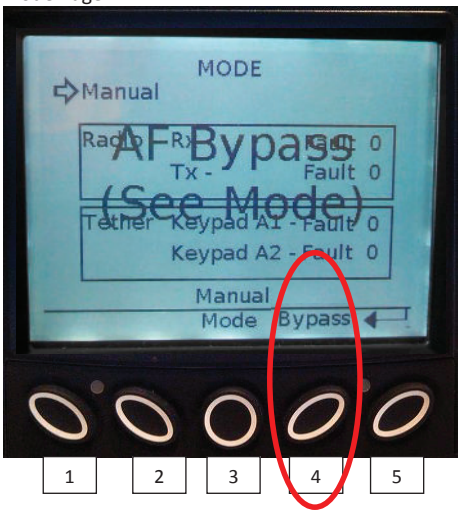

4. Press the “Bypass” button to manually run Feed Fwd at low Eng RPM and bypass the AutoFeed control. This will allow auxiliary functions to be operated on certain machines equipped with dump valve hydraulics. To turn AutoFeed back on, press the same “Bypass” button again. At startup, the machine always defaults to AutoFeed ON when the key is first turned on.

(A popup alert indicating the controls are in Bypass will blink on every screen because certain control features are disabled while in Bypass).

(While feeding fwd when *not* in Bypass, when you throttle down Feed Fwd will drop out and AutoRev will fire one time. However, if you are in Manual Bypass, AutoRev will momentarily fire every time the engine is throttled down past the AutoFeed Low RPM setting. This is to give the operator a chance to observe the AutoRev settings).

5. Go back.

Main Page

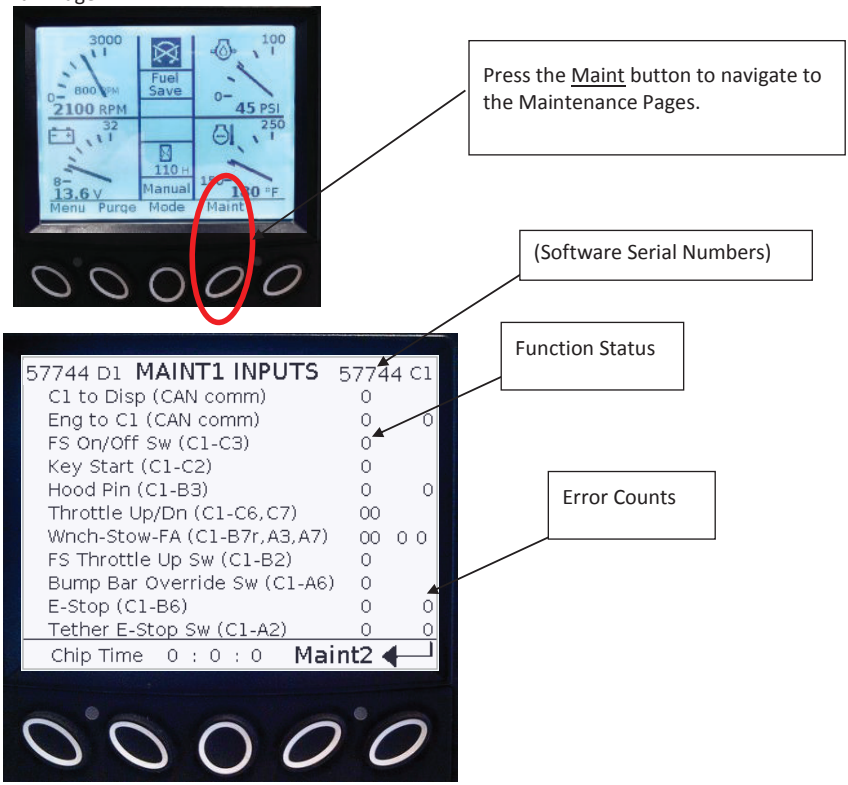

MAINT1 INPUTS
Shows the status of communication between devices and various inputs to Controller1 (C1).
1=Good/Active
0=Bad/Inactive
The number behind many of the device status is an error count. Each time communication is lost or the status is bad this number will count up to a maximum of 15 until keyswitch is cycled and that memory is cleared.
This is to provide a limited history of errors in case an operator is unable to watch this screen continuously and likely miss a status value momentarily showing 0.
(The Tether E-Stop error counter will only watch for E-Stops while in Tether Mode).

Chip Time is a measure of time accumulated when engine load is above FuelSave Load and Feeding Fwd.

57744 is 21Dec2016

Maint Pages

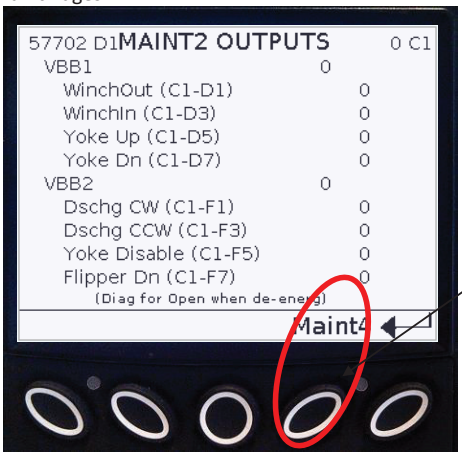

Press the Maint4 button to navigate to Maintenance 4.

MAINT2 OUTPUTS

Shows the status of Controller1 (C1) outputs that are able to be diagnosed.

Observe the note on the screen that output wiring can only be diagnosed for open/broken connection while the output is ***de**-energized*.

The Outputs in Controller1 (C1) are organized into 2 groups, each group has a supply fuse. The status of each fuse is shown at the top of each group. If multiple outputs from the same group have bad (0) status, check the supply fuse for that group as well as the individual wires to each coil.

Maint Pages

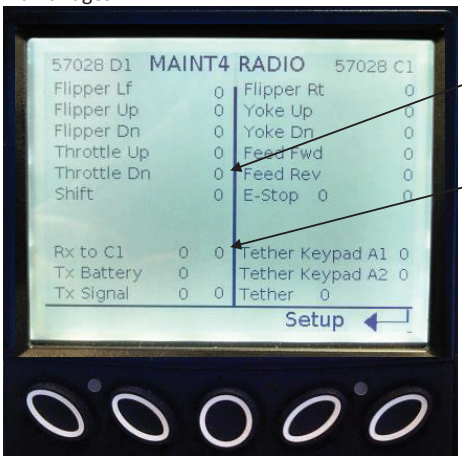

Input values change from 0 to 1 when that Radio function is active.

Error counts for how many times the controller has lost comm with the receiver or transmitter.

MAINT4 RADIO

The radio and tether systems (optional on some machines) send all of their signals via CAN messages and therefore cannot be checked physically at the receivers with a voltmeter. This Maintenance screen is a tool used to function check all inputs coming from the radio and tether keypads to ensure they are working properly. With the ignition ON but ENGINE NOT RUNNING, work through each button on the radio and tether and make sure the corresponding values change. The numbers shown are raw values that the program translates into commands.

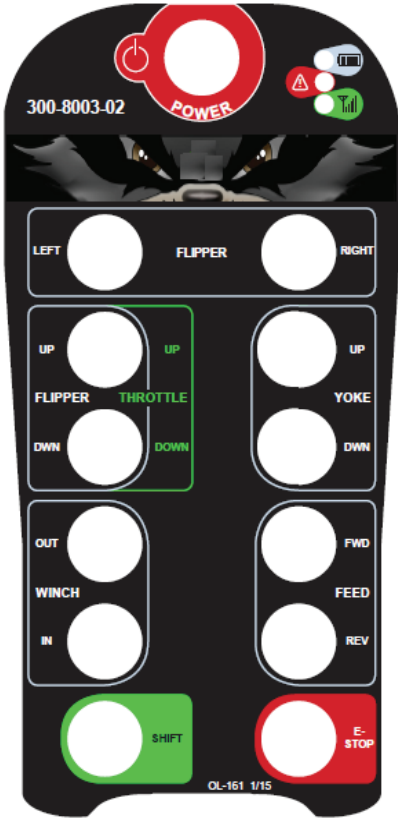

The number close behind E-Stop, Rx to C1, and Tether descriptions is an error count.

(If Fuel Saver mode is turned on and the machine idles down due to light load conditions, simply press Throttle Up and then press Feed Fwd to resume feeding).

(If the Winch Stow Switch indicates that the winch is out, Feed Fwd will stop automatically and the Radio Winch functions will be enabled. The Radio Feed Fwd button then can be used to Feed Assist on Electric Feed Assist machines. Once the Winch is properly stowed, Radio winch functions will be disabled and Feed Fwd will operate as normal to resume chipping).

The Yoke/Lift is disabled while winch is deployed. Except, Yoke/Lift can momentarily operate with Feed-Assist-Fwd. Yoke/Lift is fully enabled again once the winch is properly stowed tight on the stow bar.

When the mechanical control bar is in the reverse position a switch interrupts the FeedRev coils to prevent a double reverse which would then feed forward.

Notes

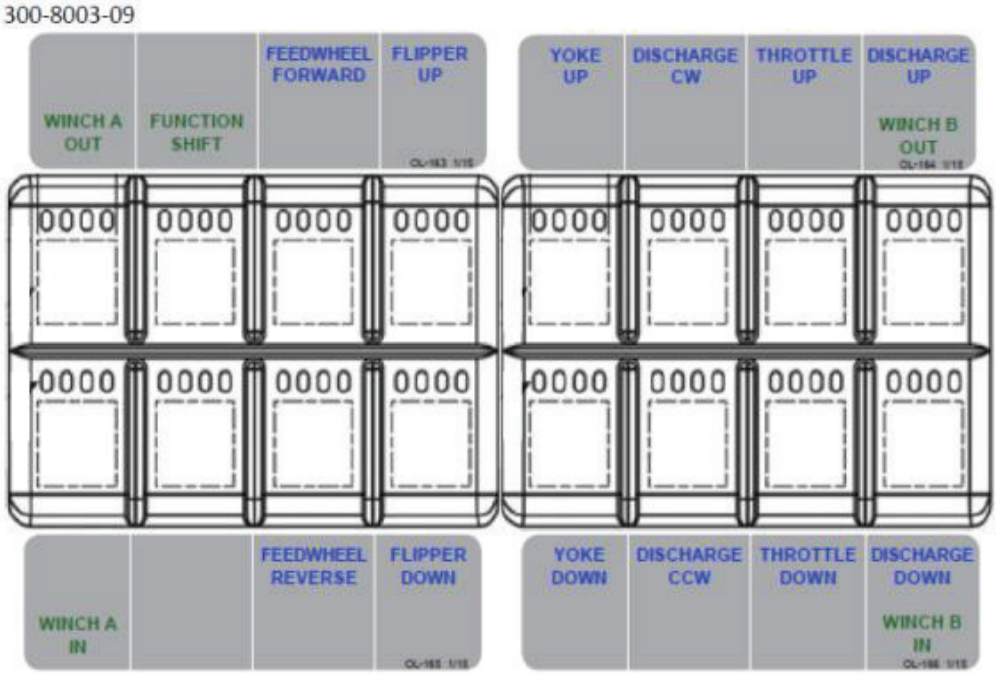

The tether is a back-up tool in case the radio fails. The tether has 2 (8) button keypads that communicate with the main controller via CAN messages. The machine must be in Tether mode in order to activate the Tether. Note: If Controller 1 (C1) loses communication with both the Display and the Radio receiver, C1 will default to Tether mode internally.

There is a hardwired E-Stop switch to ground in the tether box. If the machine is in Tether mode and this switch is open (or the tether cable broken), the system will E-Stop the engine.

(If Fuel Saver mode is turned on and the machine idles down due to light load conditions, simply press Throttle Up and then press Feed Fwd to resume feeding).

(If the Winch Stow Switch indicates that the winch is out, Feed Fwd will stop automatically and the Tether Winch functions will be enabled. The Tether Feed Fwd button then can be used to Feed Assist on Electric Feed Assist machines. Once the Winch is properly stowed, Tether winch functions will be disabled and Feed Fwd will operate as normal to resume chipping).

The Yoke/Lift is disabled while winch is deployed. Except, Yoke/Lift can momentarily operate with Feed-Assist-Fwd. Yoke/Lift is fully enabled again once the winch is properly stowed tight on the stow bar.

When the mechanical control bar is in the reverse position a switch interrupts the FeedRev coils to prevent a double reverse which would then feed forward.

Setup Page

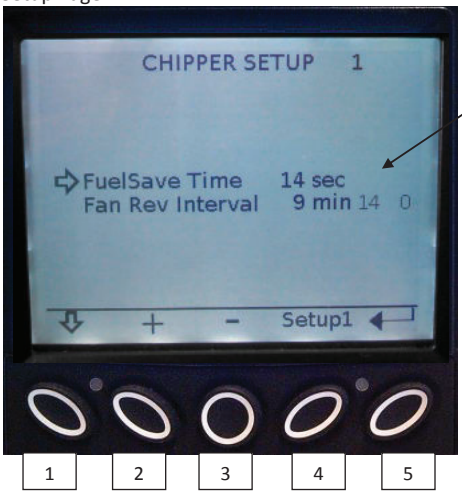

FuelSave Time: this is the amount of time the machine will wait at "no load" until it idles down.

Fan Reverse Interval is optional on some machines. It is the time between fan reversing cycles to purge debris from the radiator.

The numbers behind the Fan Rev Interval is engine fan state and communication error count.

1. Select down to the parameter you wish to adjust.

2. & 3. Increase or decrease the value of the selected parameter, or select through various options.

4. Go to more Settings (password protected).

5. Go back.

Fan Reverse Interval is optional on some machines. It is the time between fan reversing cycles to purge debris from the radiator. The reverse cycle typically lasts between 20-30 seconds. The first number behind the 'Fan Rev Interval' time setting is the engine fan state (0=neutral, 1=pulling forward, 14=reversing purge). The second number behind the time setting is an error count of how many times the main controller (C1) has lost communication with the fan control module since the last key cycle.

Setup Page (Password protected)

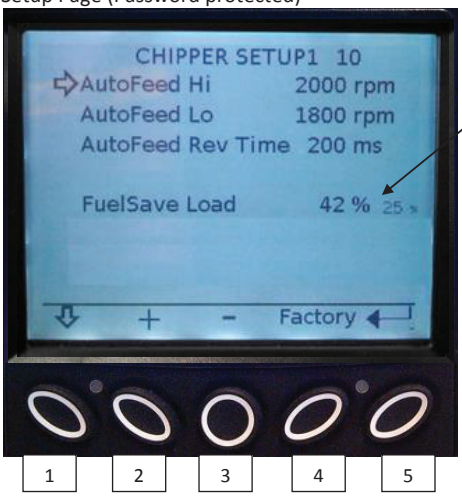

Fuel Saver - Behind the FuelSave Load setting (42% as shown) is the actual Load on the engine (25% as shown). The setting is typically 5-10% higher than actual load at high idle with clutch engaged.

In this case we would have seen between 30-35% engine load when clutch is engaged and engine at full speed, no material being fed. And so 42% was selected as the FuelSave Load setting; this assumes that loads above 42% indicate material is being fed.

1. Select down to the parameter you wish to adjust.

2. & 3. Increase or decrease the value of the selected parameter, or select through various options.

4. Go to Factory Settings (password protected).

5. Go back.

AutoFeed

During normal operation the feed system will reverse, stop, and resume based on the AutoFeed Engine Speed settings. In the example screen shot above,

when Eng RPM falls below AutoFeed Lo 1800rpm,
the feed wheels will briefly reverse for AutoFeed Rev Time 200ms and then stop.
The system will wait for Eng RPM to recover above AutoFeed Hi 2000rpm
and then Feed Fwd will resume.

(Note: if AutoFeed Hi setting value is mistakenly set higher than the engine can run, the Feed system will not Feed Fwd because it is waiting for the engine to reach a speed it cannot attain. Correct the AutoFeed Hi setting to approx 100-200rpm lower than max engine speed).

Setup Page

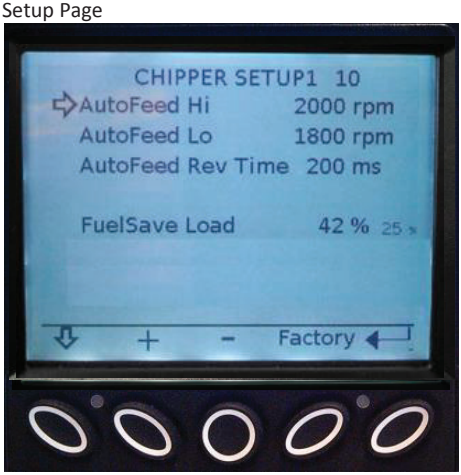

1 2 3 4 5

FuelSaver

If Fuel Saver Mode is turned on, the machine will throttle down on its own to 200 RPM above low idle if it runs too long with no load. Two settings affect Fuel Saver mode.

1. FuelSave Time: this is the amount of time the machine will wait at "no load" until it idles down (as selected on SETUP1, see page 9).
2. FuelSave Load: based on engine percent torque load; anything below this setting is considered "no load".

Ex settings: 10seconds, 42% load.

During normal operation the load on the engine might range from 50-90% while chipping. When no material is being fed into the chipper it will just run at high rpm but maybe only 35% load. With actual load being lower than the 42% setting, the controller sees "no load" and after 10 seconds will idle the machine down to approximately 1,000 RPM.

Tap Throttle Up to bring the RPM back to full speed.

The buttons on the infeed are tied into Throttle Up when FuelSave is turned on.

When you turn Fuel Saver OFF, the machine will throttle down to idle (approx 800rpm), EXCEPT if engine RPM is above AutoFeed Hi setting. In this case, the controller assumes the operator is at full engine speed and wants to keep working.

Push Button Feed Assist

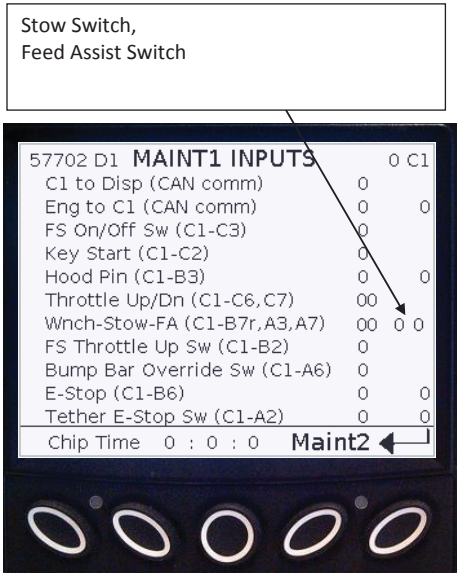

Manual Winch with Push Button Feed Assist
There is a switch on the winch that sends a 12V signal to enable the winch valve. The winch stow switch indicates to the control system whether the winch is stowed or deployed. The status of this switch is displayed on Maint1 as shown above right.

When the Winch is deployed away from its stow point the Stow Switch energizes the winch selector valve and now the winch can be operated using the manual winch control valve. While the winch is still out, the Feed Assist Push Button can be used to enable Feed Fwd for approx 1/2 sec, then it will timeout and stop; this can be repeated.

In order for the Feed Assist timer to work and allow oil during Feed Assist, the controller must see :

- a 12V signal from the Winch Stow Switch
- a 0V signal from Feed Assist Push Button Switch

When the operator is finished with winch operations, the winch rope must be stowed properly to tighten down on the Stow Bar. The Stow Switch will now indicate that the winch is no longer deployed and normal chipper functions can resume feed fwd, etc.

The Yoke/Lift is disabled while winch is deployed. Except, Yoke/Lift can momentarily operate with Feed-Assist-Fwd. Yoke/Lift is fully enabled again once the winch is properly stowed tight on the stow bar.

If the Push Button Switch is disconnected a 0V signal will be sent to the control system. The Feed Assist will then time out and prevent Feeding until the switch is reconnected to a 12V signal.

(If a Radio is added to the control system of a machine with Push Button Feed Assist, the Feed Assist will only work when the Push Button valve and button are pressed).

Electric Feed Assist

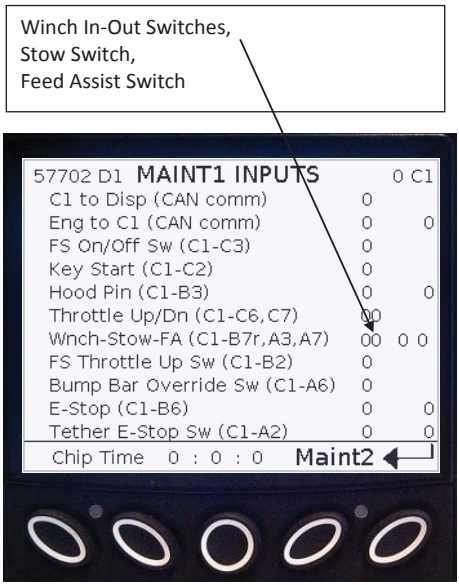

Electric Winch with Feed Assist
There is a switch on the winch that sends a 12V signal to enable the winch valve. The winch switch indicates to the control system whether the winch is stowed or deployed. The status of this switch is displayed on Maint1 as shown above right.

Electric Feed Assist is designed to operate both Feed and Winch functions at the same time but only for short durations. When the Winch is deployed away from its stow point and the Winch valve is enabled, moving the Feed Assist joystick to the right will also enable Feed Fwd for approx 1/2 sec, then it will timeout and stop; this can be repeated.

In order for the Feed Assist timer to work and allow oil during Feed Assist, the controller must see :

- a 12V signal from the Winch Stow Switch
- a 0V signal from Feed Assist Joystick Feed Fwd

When the operator is finished with winch operations, the winch rope must be stowed properly to tighten down on the Stow Bar. The Stow Switch will now indicate that the winch is no longer deployed, winch functions will be disabled, and normal chipper functions can resume feed fwd, etc.

The Yoke/Lift is disabled while winch is deployed. Except, Yoke/Lift can momentarily operate with Feed-Assist-Fwd. Yoke/Lift is fully enabled again once the winch is properly stowed tight on the stow bar.

If the Feed Assist Joystick is disconnected a 0V signal will be sent to the control system. The Feed Assist will then time out and prevent Feeding until the switch is reconnected to a 12V signal.

(If a Radio is added to the control system of a machine with an Electric Winch Feed Assist, the Feed Assist will also work when the Radio/Tether Feed Fwd button is pressed. This will provide the same 1/2 sec pulse forward as the Joystick/Button feed assist).

Main Page

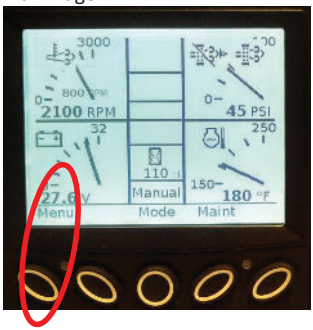

Press this button for the popup menu (Popup menu disappears after 5sec).

Popup Menu Options:
1. Press this button for Display Menu.
2. Press for DPF Options (If equipped with relevant T4 engine).
3. Press to view System Faults.
4. Press to change Service Reminder options.
5. Press to display other engine parameters.

Display Menu

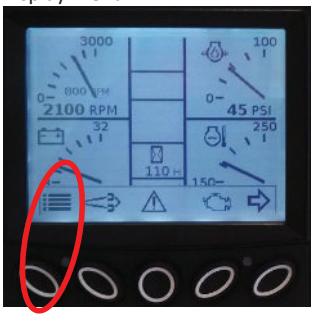

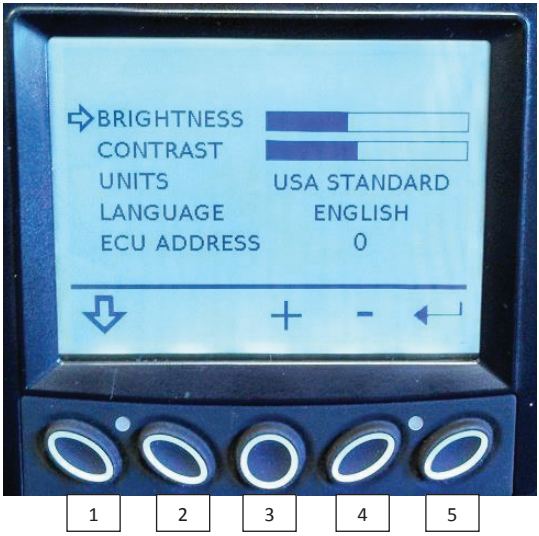

1. Select down to the parameter you wish to adjust.

3. & 4. Increase or decrease the value of the selected parameter, or select through various options.

5. Go back.

(Engine ECU address is default 0).

DPF Options

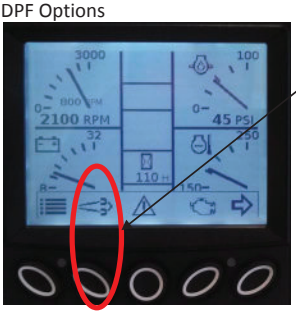

Press to display REGEN options

"N/A" will appear if the engine does not have these T4 features.

(Main Page will show DPF icons as well)

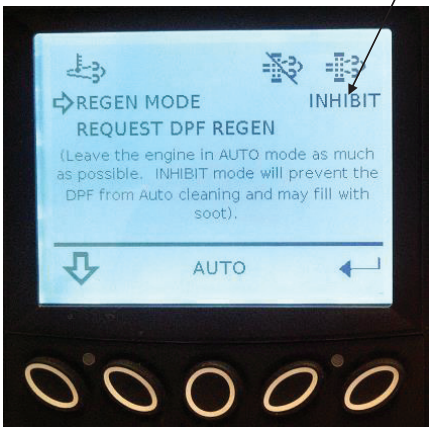

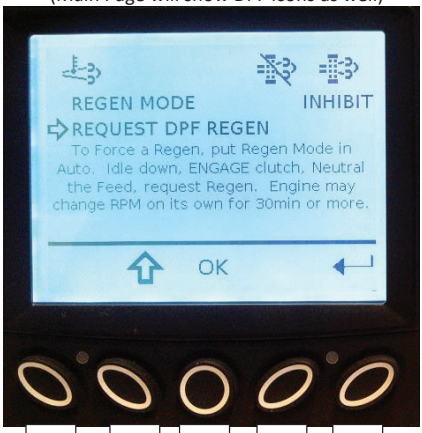

(DPF options are only applicable on T4 engine).

1 2 3 4 5

1. & 2. Select the parameter you wish to adjust.

3. Select the DPF Regen Mode (Auto or Inhibit) or Request/Force a Regen.
(In general, always leave the DPF system in Auto. The only time you may want to inhibit regen burn cycles is in the rare case where higher exhaust temperatures may elevate the risk of fire in the surrounding environment).

Exhaust gas temperature is high. Auto Regen is in process of burning out accumulated soot.

Soot level in the DPF indicates need for Regen (if in Auto, the engine typically conducts the regen on its own and the exhaust gas temperature indicator will come on to show it is in process). If the symbol has a crossout through it, Auto Regen cycles are Inhibited (disabled) by the operator.

Diesel Exhaust Fluid (DEF) tank level. Indicator will blink at low level, for ex: less than 12%

On some engines this icon is used to indicate a malfunction with the emission system.

Faults and Diagnostic Messages

Press to display Faults and error messages.

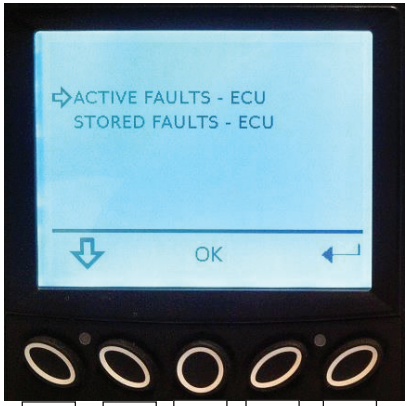

1 2 3 4 5

1. & 2. Select the parameter you wish to select.
3. Enter OK to view those faults. If there are no active or stored faults, none will be available to scroll through.
5. Go back.

If the engine or other system controller sends a diagnostic message (as shown at right), it will appear as a popup error with applicable details. The popup message can be hidden (press button 5) while still being active. The LED's on the face of the display will remain lit indicating an error is still active.

- Yellow LED is a WARNING level error.
- Red LED is a STOP level error.

Faults and Diagnostic Messages

The Amber LED corresponds to a Diagnostic Warning Condition.

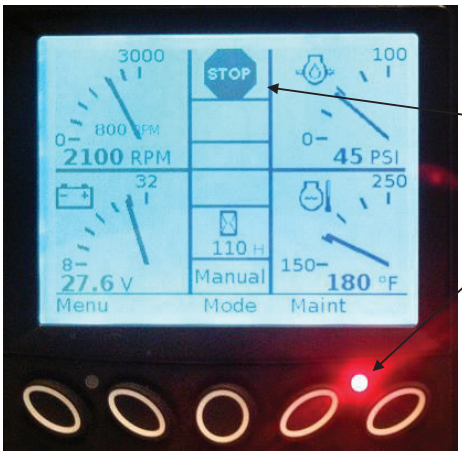

The Red LED corresponds to a Diagnostic Stop Condition (ie. stop engine).

Service Reminders

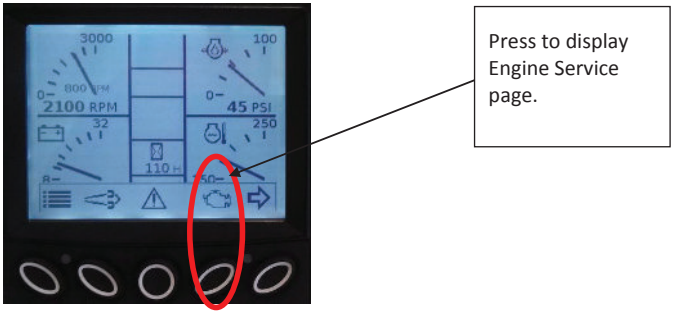

Press to display Engine Service page.

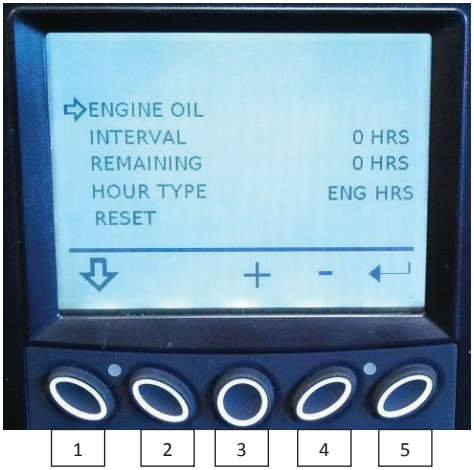

1. Select down to the parameter you wish to adjust.

3. & 4. Increase or decrease the value of the selected parameter, or select through various options.

5. Go back.

Other Engine Parameters

Press to display other engine parameters.

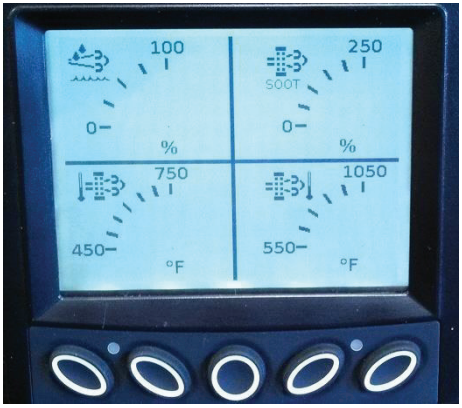

The engine may send information on other parameters it is monitoring. These can be read on 1 of 4 engine pages. Cycle through the engine pages to return to the Main Page.

Engine Service Tools

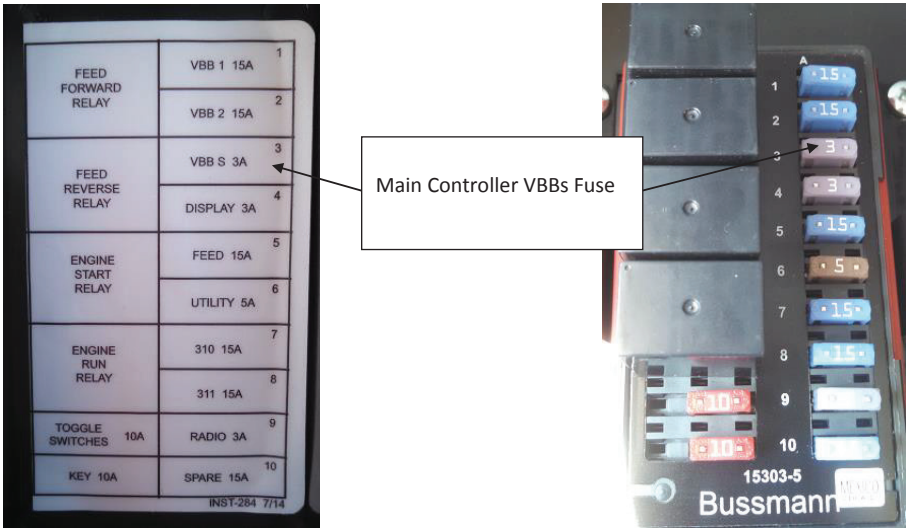

When connecting a laptop to the engine with certain engine service tools (ex CAT-ET, etc) it may be necessary to disconnect the main Controller by unplugging the 3amp VBBs fuse in station 3. The engine can still Key ON, start, and idle with the main Controller OFF.

Bump Bar Option

If the Chipper is equipped with a Bump Bar and Bump Bar Bypass valve, a Bypass Button is connected to the valve which together allow Feed Fwd for 5 seconds even if the Bump Bar has disabled the feed system.

FACTORY SETTINGS

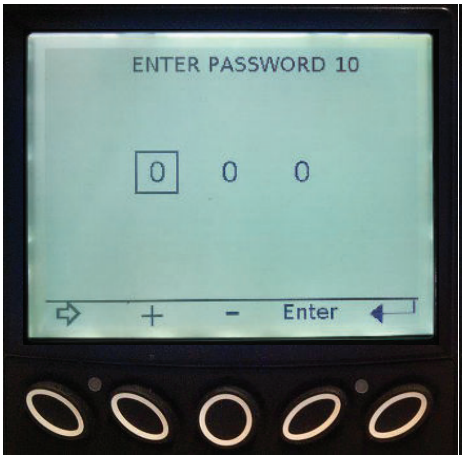

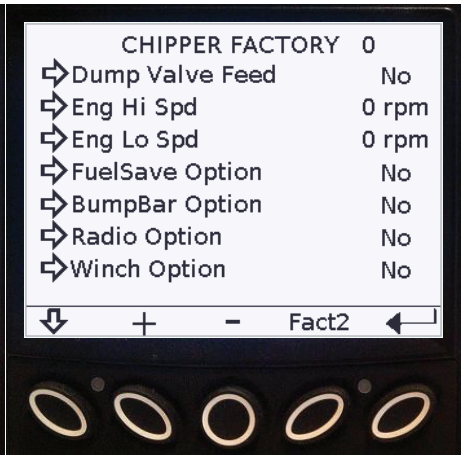

Program Notes
Display
- If Controller 1 (C1) loses communication with the Display, C1 will default to Radio mode.
- If C1 loses comm with the Display AND the radio receiver, it will default to Tether Mode.
- If C1 loses comm with display and receiver and tether, it will remain in Manual mode internally.

Radio (Rx=receiver; Tx=Transmitter)
- If C1 loses comm with receiver, all messages zeroed/centered
- BadCount03: RadioEStop (counts only while in Radio Mode)

Tether
- In order to Feed Fwd must have RPM above AutoFeed Hi or be in AutoFeed Bypass
- Things that will automatically disengage Feed Fwd:
    - Change the machine mode away from Tether to Radio or Manual
    - Lose comm with either Tether keypad while in tether mode
    - RPM command goes below AutoFeed Lo setting (make sure AutoFeed Hi is not set higher than Engine Hi Speed).
    - Winch un-stowed will stop Feed Fwd and make it Feed Assist

Engine
- Critical engine faults related to Tier4 DPF soot levels:
    - these faults will trigger the engine to idle down and request action from the operator
    - engine may also derate or shutdown in severe cases

SPN	FMI	
3251	0	cu DPF is full of soot. Contact engine service center.
3251	16	cu DPF is nearly full of soot. Goto MENU - DPF and Force a Regen.
3703	31	ca DPF is nearly full of soot. Goto MENU - DPF and Force a Regen.
3714	31	ca DPF is nearly full of soot. Goto MENU - DPF and Force a Regen.
3715	31	ca DPF is full of soot. Contact engine service center.
3719	0	ca jd DPF is full of soot. Goto MENU - DPF and Force a Regen. Contact service center.
3719	15	jd DPF is nearly full of soot. Goto MENU - DPF and Force a Regen.
3719	16	ca jd DPF is nearly full of soot. Goto MENU - DPF and Force a Regen.

- C1 will idle Eng down for
    - Key to start position
    - C1 loses comm with Eng
    - RadioMode and RxComm Good and TxComm Bad (Tx out of range, Tx OFF, Tx batteries low)
    - RadioMode and RxComm Bad
    - TetherMode and Tether Comm bad
    - DPF DTC's
    - Push 'Force' in Maint2-DPF
    - Manual Mode and Lost Display
    - FuelSaver is shut off when Eng RPM is below AF Hi setting

Feed
- When you throttle down while feeding fwd, Feed Fwd will drop out and AutoRev will fire one time (within 6sec).

Inputs
- BadCount01: Hood Pin
- BadCount02: EStop
- BadCount04: TetherEStop (counts only while in TetherMode)
- The buttons on the infeed are tied into Throttle Up when FuelSave is turned on.
- Winch In-Out Sw R to Gnd; Open=60,000; In 0Ω=0; Out 1000Ω=AtoD=12,300; compare LT 20,000

FuelSaver
- FuelSave Time has a range of 10-255sec.

Document notes
21Dec2016 – First Draft