Pantone 4625C

POLARIS®

The Way Out.

RANGER 4X4 700 EFI
RANGER 6X6 700 EFI

Owner's Manual

for Maintenance and Safety

⚠WARNING

Improper vehicle use can result in SEVERE INJURY or DEATH.

NEVER:

- **Operate on public roads. A collision can occur with another vehicle.**
- **Carry more than two passengers, or passengers under age five.**
- **Use ALCOHOL or DRUGS before or while operating this vehicle.**
- **Operate at speeds too fast for your skills or the conditions.**
- **Operate this vehicle on HILLS steeper than 15 degrees ∠ 15°. To prevent flipover in hilly terrain, use throttle and brakes gradually.**

ALWAYS:

- **Avoid paved surfaces, which may adversely affect handling and control.**
- **Use proper RIDING TECHNIQUES to avoid vehicle overturns on hills and rough terrain, and in turns.**
- **Wear eye protection.**

REVERSE operation can be dangerous, even at low speeds. Steering becomes difficult. To prevent flipover, avoid sharp turns.

The park brake will supply increased braking, but should be used as a parking brake only.

READ OWNER'S MANUAL.
FOLLOW ALL INSTRUCTIONS AND WARNINGS.

POLARIS®
The Way Out.

For your nearest Polaris dealer,
call 1-800-POLARIS
or visit www.polarisindustries.com
Polaris Sales Inc.,
2100 Hwy. 55, Medina, MN 55340
Phone 1-888-704-5290
Part No. 9921268 Rev 02
Printed in USA

⚠ WARNING

Read, understand, and follow all of the instructions and safety precautions in this manual and on all product labels.

Failure to follow the safety precautions could result in serious injury or death.

⚠ WARNING

The engine exhaust from this product contains chemicals known to the State of California to cause cancer, birth defects or other reproductive harm.

WELCOME

Thank you for purchasing a Polaris vehicle, and welcome to our worldwide family of Polaris owners. We proudly produce an exciting line of utility and recreational products.

- Snowmobiles
- All-terrain vehicles (ATVs)
- *RANGER* utility vehicles
- Victory motorcycles

We believe Polaris sets a standard of excellence for all utility and recreational vehicles manufactured in the world today. Many years of experience have gone into the engineering, design, and development of your Polaris vehicle, making it the finest machine we've ever produced.

For safe and enjoyable operation of your vehicle, be sure to follow the instructions and recommendations in this owner's manual. Your manual contains instructions for minor maintenance, but information about major repairs is outlined in the Polaris Service Manual and should be performed only by a Factory Certified Master Service Dealer (MSD) Technician.

Your Polaris dealer knows your vehicle best and is interested in your total satisfaction. Be sure to return to your dealership for all of your service needs during, and after, the warranty period.

We also take great pride in our complete line of apparel, parts and accessories, available through our online store at www.purepolaris.com. Have your accessories and clothing delivered right to your door!

POLARIS®
The Way Out.

POLARIS and POLARIS THE WAY OUT are registered trademarks of Polaris Industries Inc.

Copyright 2007 Polaris Sales Inc. All information contained within this publication is based on the latest product information at the time of publication. Due to constant improvements in the design and quality of production components, some minor discrepancies may result between the actual vehicle and the information presented in this publication. Depictions and/or procedures in this publication are intended for reference use only. No liability can be accepted for omissions or inaccuracies. Any reprinting or reuse of the depictions and/or procedures contained within, whether whole or in part, is expressly prohibited.

Printed in U.S.A.

2008 *RANGER* 4X4 700 EFI/*RANGER* 6X6 700 EFI Owner's Manual

P/N 9921268

TABLE OF CONTENTS

Vehicle Identification Numbers 4
Safety 5
Features and Controls 22
Operation 38
Emission Control Systems 57
Maintenance 58
Specifications 108
Polaris Products 112
Troubleshooting 113
Warranty 117
Maintenance Log 126
Index 128

VEHICLE IDENTIFICATION NUMBERS

Record your vehicle's identification numbers and key number in the spaces provided. Remove the spare key and store it in a safe place. An ignition key can be duplicated only by ordering a Polaris key blank (using your key number) and mating it with one of your existing keys. The ignition switch must be replaced if all keys are lost.

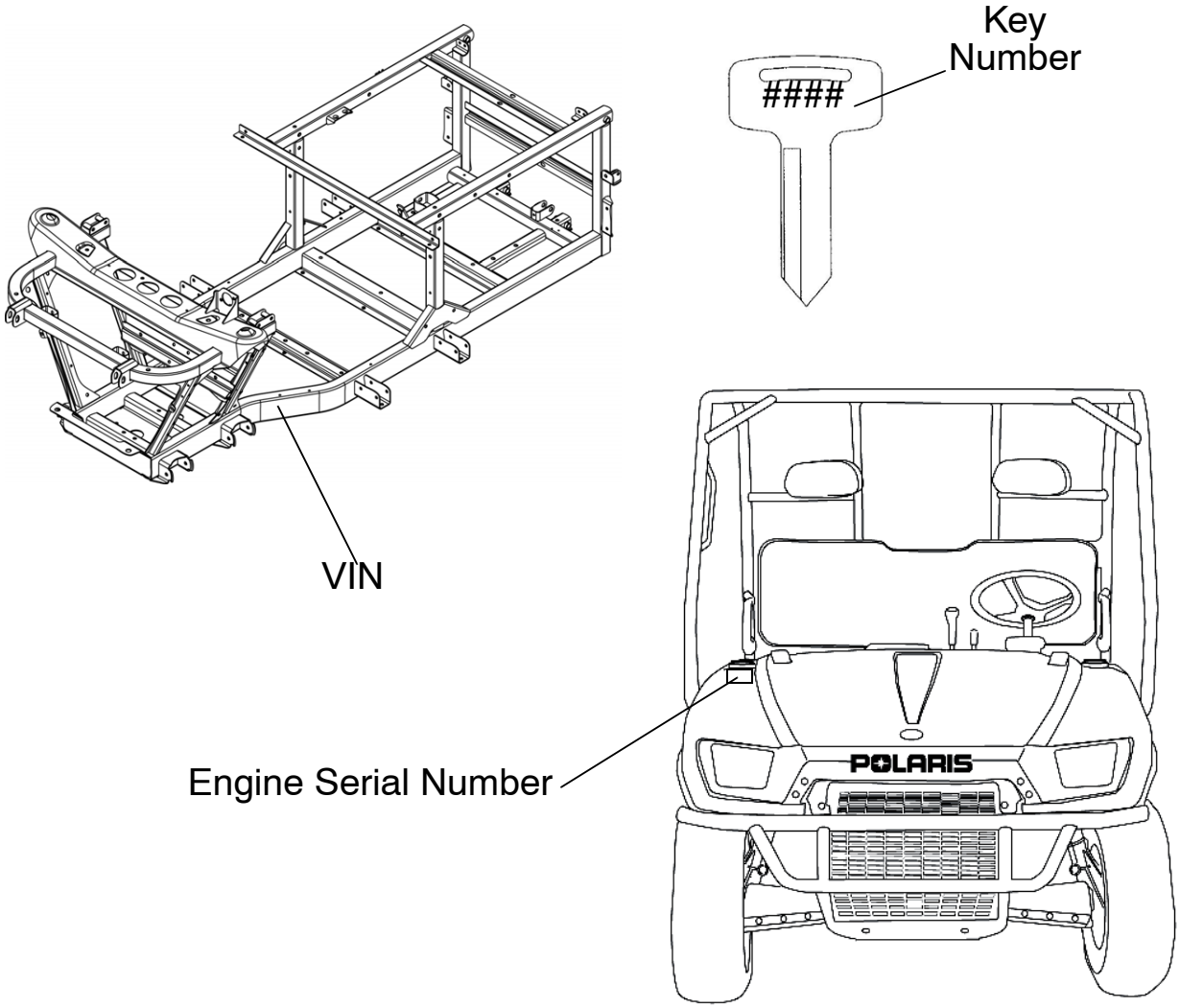

Vehicle Model Number: _____

Frame VIN: _____

Engine Serial Number: _____

Key Number _____

Safety Decals and Locations

Warning decals have been placed on the vehicle for your protection. Read and follow the instructions of the decals on the vehicle carefully. If any of the decals depicted in this manual differ from the decals on your vehicle, always read and follow the instructions of the decals *on the vehicle*.

If any decal becomes illegible or comes off, contact your Polaris dealer to purchase a replacement. Replacement *safety* decals are provided by Polaris at no charge. The part number is printed on the decal.

Container/Passenger/Tire Pressure Warning

WARNING

Remove flammable material containers from box before filling.

- Passengers can be thrown off. This can cause serious injury or death.
- Never carry passengers in cargo box.

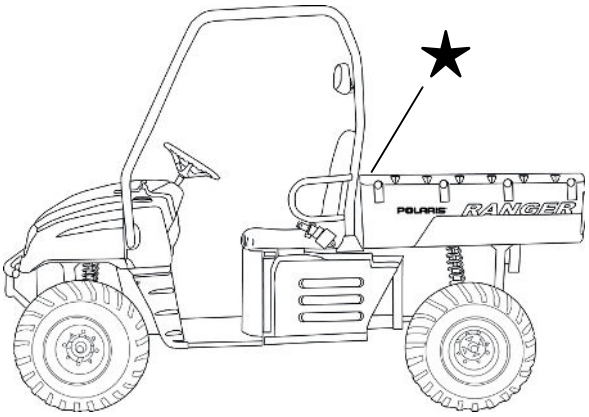

Maximum 2X4 Box Load 850 lbs. (386 kg)

Maximum 4X4 Box Load 1000 lbs. (455 kg)

Maximum 6X6 Box Load 1200 lbs. (545 kg)

IMPROPER TIRE PRESSURE OR OVERLOADING can cause loss of control resulting in SEVERE INJURY OR DEATH.

TIRE PRESSURE IN PSI (KPa):

RANGER - 2X4 and 4X4 FRONT 10 (69) REAR 10 (69)

RANGER - 6X6 FRONT 10 (69) CENTER 10 (69) REAR 10 (69)

MAXIMUM WEIGHT CAPACITY INCLUDES WEIGHT OF OPERATOR, PASSENGER, CARGO, AND ACCESSORIES.

RANGER 2X4 and 4X4 is 1500 LBS. (682 KG)

RANGER 6X6 is 1750 LBS. (795 KG)

Reduce speed and allow greater distance for braking when carrying cargo. Overloading or carrying tall, off-center, or unsecured loads will increase your risk of losing control. Loads should be centered and carried as low as possible in box. For stability on rough or hilly terrain, reduce speed and cargo. Be careful if load extends over the side of the box.

Read Owner's Manual for more detailed loading information.

SAFETY
Safety Decals and Locations

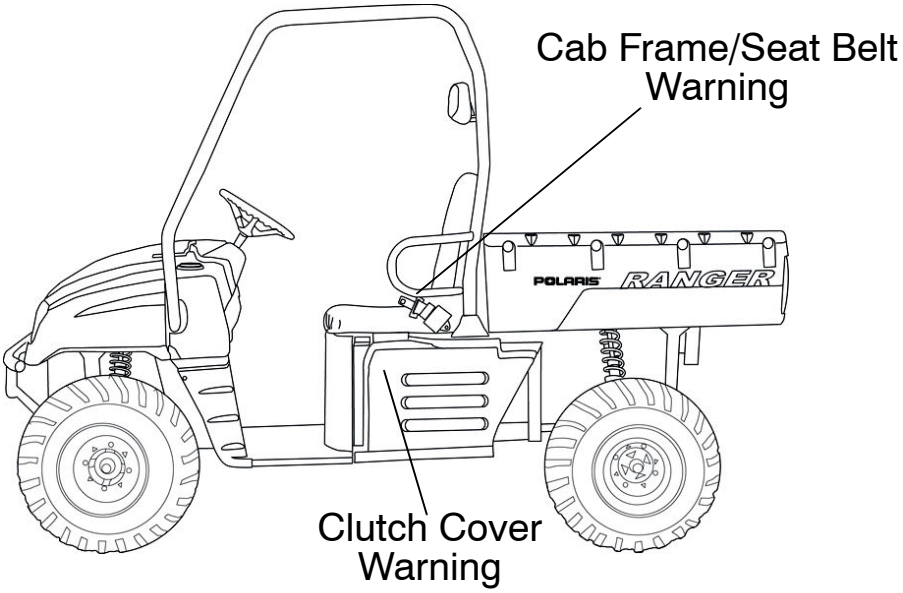

Clutch Cover Warning

WARNING

NO STEP

- Moving parts hazard under belt-clutch guard. To prevent serious injury, do not operate vehicle with guard removed.
- Do not modify engine or clutch. Doing so can cause part failure, possible imbalance, and excessive engine RPM which can result in serious injury or death.

Cab Frame/Seat Belt Warning

WARNING

- VEHICLE ROLLOVER could cause severe injury or death. This cab frame is not designed or intended to provide rollover protection.
- ALWAYS WEAR YOUR SEAT BELT for maximum protection.

Safety Decals and Locations

Shift Caution

CAUTION

To avoid transmission damage, shift only when vehicle is stationary and at idle.

Discretionary Warning

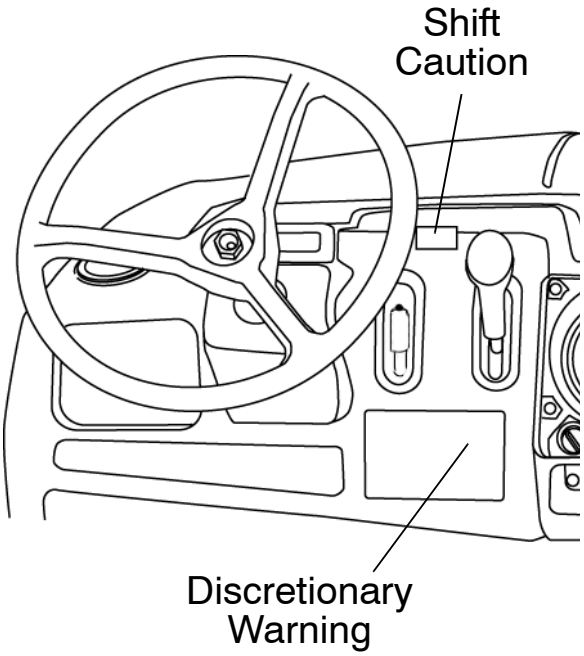

WARNING

Improper vehicle use can result in SEVERE INJURY or DEATH.

NEVER:

- Operate on public roads. A collision can occur with a another vehicle.
- Carry more than two passengers, or passengers under age five.
- Use ALCOHOL or DRUGS before or while operating this vehicle.
- Operate at speeds too fast for your skills or the conditions.
- Operate this vehicle on HILLS steeper than 15 degrees ∠ 15°. To prevent flipover on hilly terrain, use throttle and brakes gradually.

ALWAYS:

- Avoid paved surfaces which may adversely affect handling and control.
- Use proper RIDING TECHNIQUES to avoid vehicle overturns on hills and rough terrain and in turns.
- Wear eye protection.

REVERSE operation can be dangerous even at low speeds. Steering becomes difficult. To prevent flipover, avoid sharp turns.

The park/emergency brake lever will supply increased braking, but should be used as an emergency or parking brake only.

READ OWNER'S MANUAL. FOLLOW ALL INSTRUCTIONS AND WARNINGS.

IF OWNER'S MANUAL IS MISSING, CONTACT A POLARIS DEALER FOR A REPLACEMENT.

THIS GENERAL PURPOSE OFF-ROAD UTILITY VEHICLE DOES NOT MEET FEDERAL MOTOR VEHICLE SAFETY STANDARDS FOR ON-ROAD VEHICLES.

SAFETY
Operator Safety

⚠ WARNING

Failure to follow the warnings contained in this manual can result in severe injury or death.

A Polaris *RANGER* is not a toy and can be hazardous to operate. This vehicle handles differently than other vehicles, such as motorcycles and cars. A collision or rollover can occur quickly, even during routine maneuvers like turning, or driving on hills or over obstacles, if you fail to take proper precautions.

Read and understand your owner's manual and all warnings before operating the vehicle.

Age Restrictions

This vehicle is an ADULT VEHICLE ONLY. Operation is prohibited for anyone under 16 years of age. No person under the age of 5 may ride as a passenger in this vehicle.

Know Your Vehicle

As the operator of the vehicle, you are responsible for your personal safety, the safety of others, and the protection of our environment. Read and understand your owner's manual, which includes valuable information about all aspects of your vehicle, including safe operating procedures.

The *RANGER* is an off-road vehicle. Familiarize yourself with all laws and regulations concerning the operation of this vehicle in your area.

We strongly advise you to strictly follow the recommended maintenance program outlined in your owner's manual. This preventive maintenance program is designed to ensure that all critical components on your vehicle are thoroughly inspected at specific intervals.

Operator Safety

The following signal words and symbols appear throughout this manual and on your vehicle. Your safety is involved when these words and symbols are used. Become familiar with their meanings before reading the manual.

⚠

The *safety alert symbol*, on your vehicle or in this manual, alerts you to the potential for injury.

⚠ WARNING

The *safety alert warning* indicates a potential hazard that may result in serious injury or death.

⚠ CAUTION

The *safety alert caution* indicates a potential hazard that may result in minor injury or damage to the vehicle.

CAUTION

A *caution* indicates a situation that may result in damage to the vehicle.

NOTE

A *note* will alert you to important information or instructions.

SAFETY
Operator Safety

⚠ WARNING
Serious injury or death can result if you do not follow these instructions and procedures, which are outlined in further detail within your owner's manual.

- Read this manual and all labels carefully. Follow the operating procedures described.
- Never allow anyone without a valid driver's license to operate this vehicle.
- Minimum age recommendation for passengers is five years old. Passengers under five years of age require special restraints which are not available with this vehicle. Driver and passenger should wear their seat belts at all times.
- Never permit a guest to operate this vehicle unless the guest has read this manual and all product labels.
- To reduce tipover risk, be especially careful when encountering obstacles and slopes and when braking on hills or during turns.
- This vehicle is for off road use only. Never operate on public roads. Always avoid paved surfaces.
- Helmets are recommended whenever driving this vehicle in an aggressive manner. Eye protection is recommended at all times.
- Never consume alcohol or drugs before or while operating this vehicle.
- Never operate at excessive speeds. Always travel at a speed proper for the terrain, visibility and operating conditions, and your experience.
- Never attempt jumps or other stunts.
- Always inspect your vehicle each time you use it to make sure it's in safe operating condition. Always follow the inspection and maintenance procedures and schedules described in this manual.
- Always keep both hands on the steering wheel and both feet on the floorboards of the vehicle during operation.
- Always travel slowly and use extra caution when operating on unfamiliar terrain. Be alert to changing terrain.
- Never operate on excessively rough, slippery or loose terrain.

Operator Safety

- Always follow proper procedures for turning as described in this manual. Practice turning at slow speeds before attempting to turn at faster speeds. Never turn at excessive speeds.
- Always have this vehicle checked by an authorized Polaris dealer if it has been involved in an accident.
- Never operate this vehicle on hills too steep for the vehicle or for your abilities. Practice on smaller hills before attempting larger hills.
- Always follow proper procedures for climbing hills as described in this manual. Check the terrain carefully before attempting to climb a hill. Never climb hills with excessively slippery or loose surfaces. Never open the throttle suddenly or make sudden gear changes. Never go over the top of a hill at high speed.
- Always follow the proper procedures outlined in this manual for traveling downhill and for braking on hills. Check the terrain carefully before descending a hill. Never travel downhill at high speed. Avoid going downhill at an angle, which would cause the vehicle to lean sharply to one side. Travel straight down the hill where possible.
- Always check for obstacles before operating in a new area. Never attempt to operate over large obstacles such as rocks or fallen trees. Always follow the proper procedures outlined in this manual when operating over obstacles.
- Always be careful of skidding or sliding. On slippery surfaces such as ice, travel slowly and exercise caution to reduce the chance of skidding or sliding out of control.
- Never operate your vehicle in fast-flowing water or in water deeper than that specified in this manual. Wet brakes may have reduced stopping ability. Test your brakes after leaving water. If necessary, apply them lightly several times to let friction dry out the pads.
- Always be sure there are no obstacles or people behind your vehicle when operating in reverse. When it's safe to proceed in reverse, move slowly. Avoid turning at sharp angles in reverse.
- Always use the proper size and type of tires specified in this manual. Always maintain proper tire pressure as specified on page 5.

SAFETY

Operator Safety

- Never modify this vehicle through improper installation or use of accessories.
- Never exceed the stated load capacity for this vehicle. Cargo should be properly distributed and securely attached. Reduce speed and follow the instructions in this manual for hauling cargo or pulling a trailer. Allow a greater distance for braking.
- Always wear the seat belts when operating this vehicle. Seat belts reduce the severity of injury in case of a sudden stop or collision.
- Always keep arms and legs inside the cab frame while the vehicle is in motion.
- Always engage the park brake before getting out of the vehicle. See page 37.
- Always apply the service brakes before releasing the park brake.
- Always turn off the engine before refueling. Make sure the refueling area is well ventilated and free of any source of flame or sparks. Gasoline is extremely flammable. See page 21 for fuel safety warnings.
- Always remove the ignition key when the vehicle is not in use to prevent unauthorized use or accidental starting.

FOR MORE INFORMATION ABOUT SAFETY, call Polaris at 1-800-342-3764.

Operator Safety

⚠ WARNING

Make sure your *RANGER* is in excellent operating condition at all times. We strongly recommend that the operator check all safety components before each ride.

Polaris *RANGER*s are designed to provide safe operation when used as directed. Failure of critical machine components may result from operation with any modifications, especially those that increase speed or power. The *RANGER* may become aerodynamically unstable at speeds higher than those for which it is designed. Loss of control may occur at higher speeds. Modifications may also create a safety hazard and lead to bodily injury.

Do not make any modifications to your *RANGER*.

Equipment Modifications

We are concerned for the safety of our customers and for the general public. Therefore, we strongly recommend that consumers do not install on a Polaris *RANGER* any equipment that may increase the speed or power of the vehicle, or make any other modifications to the vehicle for these purposes. Any modifications to the original equipment of the vehicle create a substantial safety hazard and increase the risk of bodily injury.

The warranty on your Polaris *RANGER* is terminated if any equipment has been added to the vehicle, or if any modifications have been made to the vehicle, that increase its speed or power.

NOTE: The addition of certain accessories, including (but not limited to) mowers, blades, tires, sprayers, or large racks, may change the handling characteristics of the vehicle. Use only Polaris-approved accessories, and familiarize yourself with their function and effect on the vehicle.

SAFETY
Operator Safety

⚠ WARNING

POTENTIAL HAZARD

Stalling, rolling backwards while climbing a hill

WHAT CAN HAPPEN

Vehicle overturn

HOW TO AVOID THE HAZARD

Maintain a steady speed when climbing a hill.

If you lose all forward speed:

Apply the brakes.

Engage the park brake after fully stopped.

If you begin rolling backwards:

Never apply engine power.

Apply the brakes gradually.

When fully stopped, engage the park brake.

In the event of an accident, have a qualified service dealer check the complete vehicle for possible damage, including (but not limited to) brakes, throttle and steering.

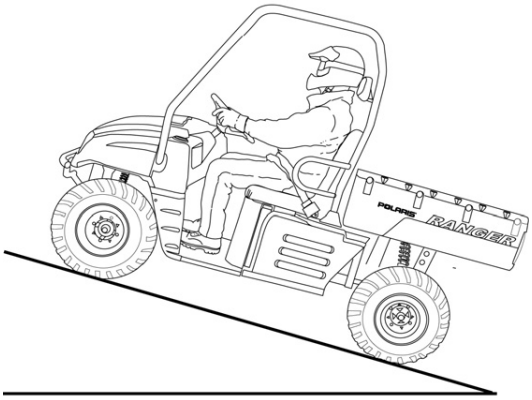

⚠ WARNING

POTENTIAL HAZARD

Operating this vehicle on paved surfaces

WHAT CAN HAPPEN

Loss of control

HOW TO AVOID THE HAZARD

This vehicle's tires are designed for off-road use only, not for use on pavement. Paved surfaces may seriously affect handling and control of the vehicle, and may cause the vehicle to go out of control.

Avoid operating the vehicle on pavement. If you must operate on a paved surface, travel slowly and do not make sudden turns or stops.

Operator Safety

⚠ WARNING

POTENTIAL HAZARD

Operating this vehicle without proper instruction

WHAT CAN HAPPEN

Loss of control, accident

HOW TO AVOID THE HAZARD

The risk of an accident is greatly increased if the operator does not know how to operate the vehicle properly in different situations and on different types of terrain.

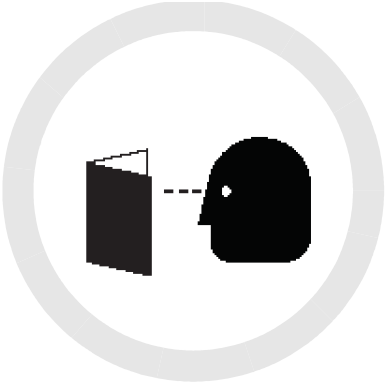

All operators must read and understand the Owner's Manual and all warning and instruction labels before operating the vehicle.

⚠ WARNING

POTENTIAL HAZARD

Operating this vehicle on public streets, roads or highways

WHAT CAN HAPPEN

Collision with another vehicle

HOW TO AVOID THE HAZARD

Never operate this vehicle on any public street, road or highway, including dirt or gravel.

In many states it's illegal to operate vehicles of this type on public streets, roads and highways.

SAFETY
Operator Safety

⚠ WARNING

POTENTIAL HAZARD

Operating this vehicle after consuming alcohol or drugs

WHAT CAN HAPPEN

Could seriously affect your judgment.

Could cause you to react more slowly.

Could affect your balance and perception.

Could result in an accident.

HOW TO AVOID THE HAZARD

Driving a *RANGER* requires your full attention. DO NOT drink alcohol or use drugs or medications before or while driving. They will reduce your alertness and slow your reaction time. In most states and provinces, it's prohibited by law to drive while intoxicated or under the influence of drugs.

⚠ WARNING

POTENTIAL HAZARD

Operating this vehicle at excessive speeds

WHAT CAN HAPPEN

Loss of control, accident

HOW TO AVOID THE HAZARD

Always travel at a speed proper for the terrain, visibility and operating conditions, and your experience.

Operator Safety

⚠ WARNING
POTENTIAL HAZARD Attempting jumps and other stunts WHAT CAN HAPPEN Loss of control, accident and/or vehicle overturn HOW TO AVOID THE HAZARD Never attempt jumps and other stunts. Avoid exhibition driving.

⚠ WARNING
POTENTIAL HAZARD Operating on frozen bodies of water. WHAT CAN HAPPEN Severe injury or death can result if the vehicle and/or the operator fall through the ice. HOW TO AVOID THE HAZARD Never operate the *RANGER* on a frozen body of water.

SAFETY
Operator Safety

⚠ WARNING

POTENTIAL HAZARD

Failure to inspect the vehicle before operating

Failure to properly maintain the vehicle

WHAT CAN HAPPEN

Accident, equipment damage

HOW TO AVOID THE HAZARD

Always inspect your *RANGER* before each use to make sure it's in safe operating condition.

Always follow the inspection and maintenance procedures and schedules described in the Owner's Manual.

⚠ WARNING

POTENTIAL HAZARD

Failure to use extra caution when operating this vehicle on unfamiliar terrain

WHAT CAN HAPPEN

Loss of control, vehicle overturn

HOW TO AVOID THE HAZARD

Travel slowly and use extra caution when operating on unfamiliar terrain.

Always be alert to changing terrain conditions when operating the vehicle. You may come upon hidden rocks, bumps, or holes suddenly, without enough time to react.

Operator Safety

⚠ WARNING

POTENTIAL HAZARD

Failure to follow the minimum age recommendations for this vehicle

WHAT CAN HAPPEN

Serious injury or death (the child or others)

HOW TO AVOID THE HAZARD

Only persons with a valid driver's license should operate a Polaris *RANGER*.

Even though a child may be within the age group for which some vehicles are recommended, he or she may not have the skills, abilities, or judgment needed to operate the vehicle safely and may be involved in a serious accident.

⚠ WARNING

POTENTIAL HAZARD

Operating this vehicle with improper tires or with improper or uneven tire pressure

WHAT CAN HAPPEN

Loss of control, accident and/or overturn

HOW TO AVOID THE HAZARD

Always use the size and type of tires specified in the Owner's Manual for this vehicle. See page 5.

Always maintain proper tire pressure as described on the decal and in the Owner's Manual. See page 5.

Operator Safety

⚠ WARNING

Leaving the keys in the ignition can lead to unauthorized use of the vehicle resulting in serious injury or death. Always remove the ignition key when the vehicle is not in use.

⚠ WARNING

After any overturn or accident, have a qualified service dealer inspect the entire vehicle for possible damage, including (but not limited to) brakes, throttle and steering systems.

⚠ WARNING

Exhaust system components are very hot during and after use of the vehicle. Hot components can cause serious burns and fire. Do not touch hot exhaust system components. Always keep combustible materials away from the exhaust system. Use caution when traveling through tall grass, especially dry grass.

Fuel Safety

⚠ WARNING

Gasoline is highly flammable and is explosive under certain conditions. Always exercise extreme caution whenever handling gasoline.

Always stop the engine when refueling.

Always refuel outdoors or in a well ventilated area.

Do not smoke or allow open flames or sparks in or near the refueling area or where gasoline is stored.

Do not over fill the tank. Do not fill the tank neck.

If gasoline spills on your skin or clothing, immediately wash it off with soap and water and change clothing.

Never start the engine or let it run in an enclosed area. Gasoline powered engine exhaust fumes are poisonous and can cause loss of consciousness and death in a short time.

FEATURES AND CONTROLS

Component Locations

Some Polaris vehicles are equipped with special features such as the cab frame. Not all models come with all features. Refer to the specifications section beginning on page 110.

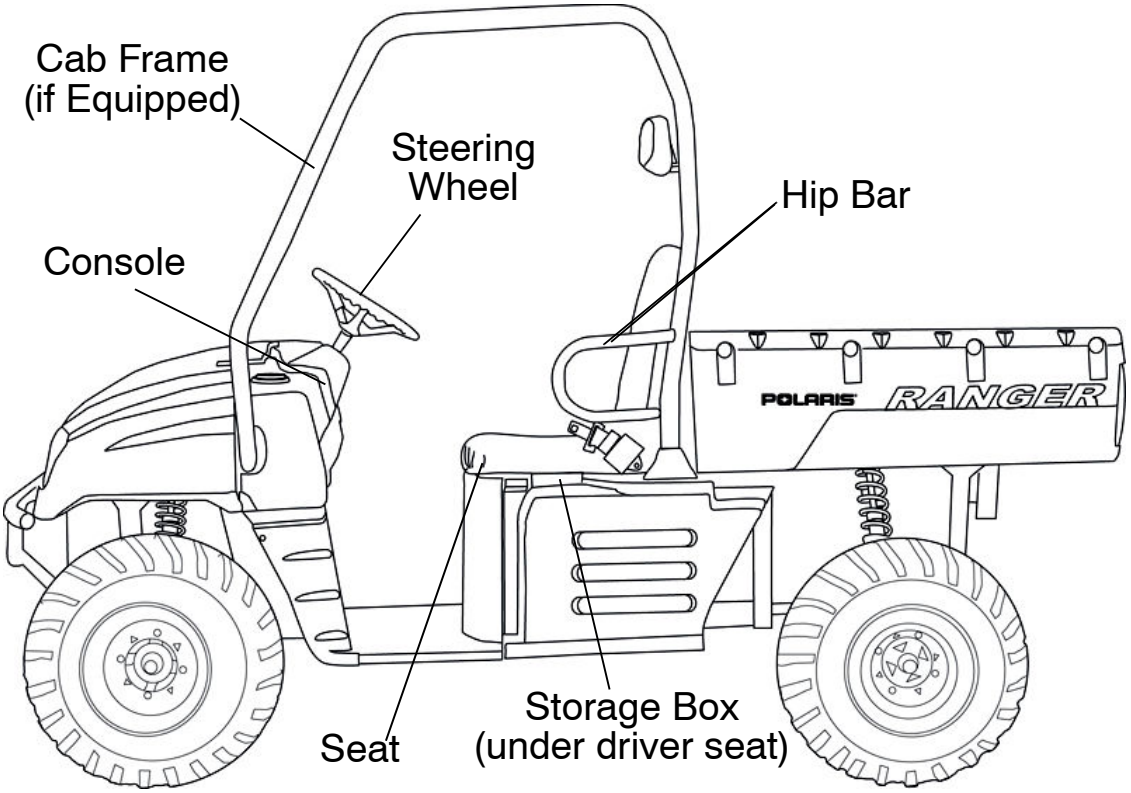

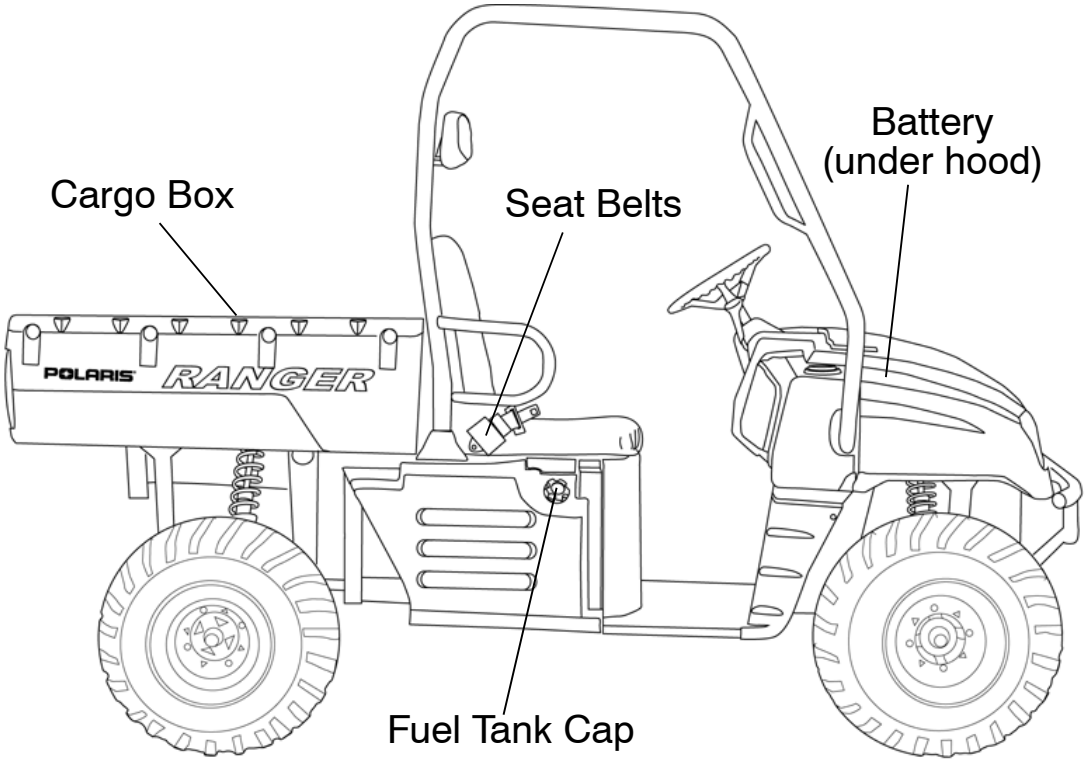

Component Locations

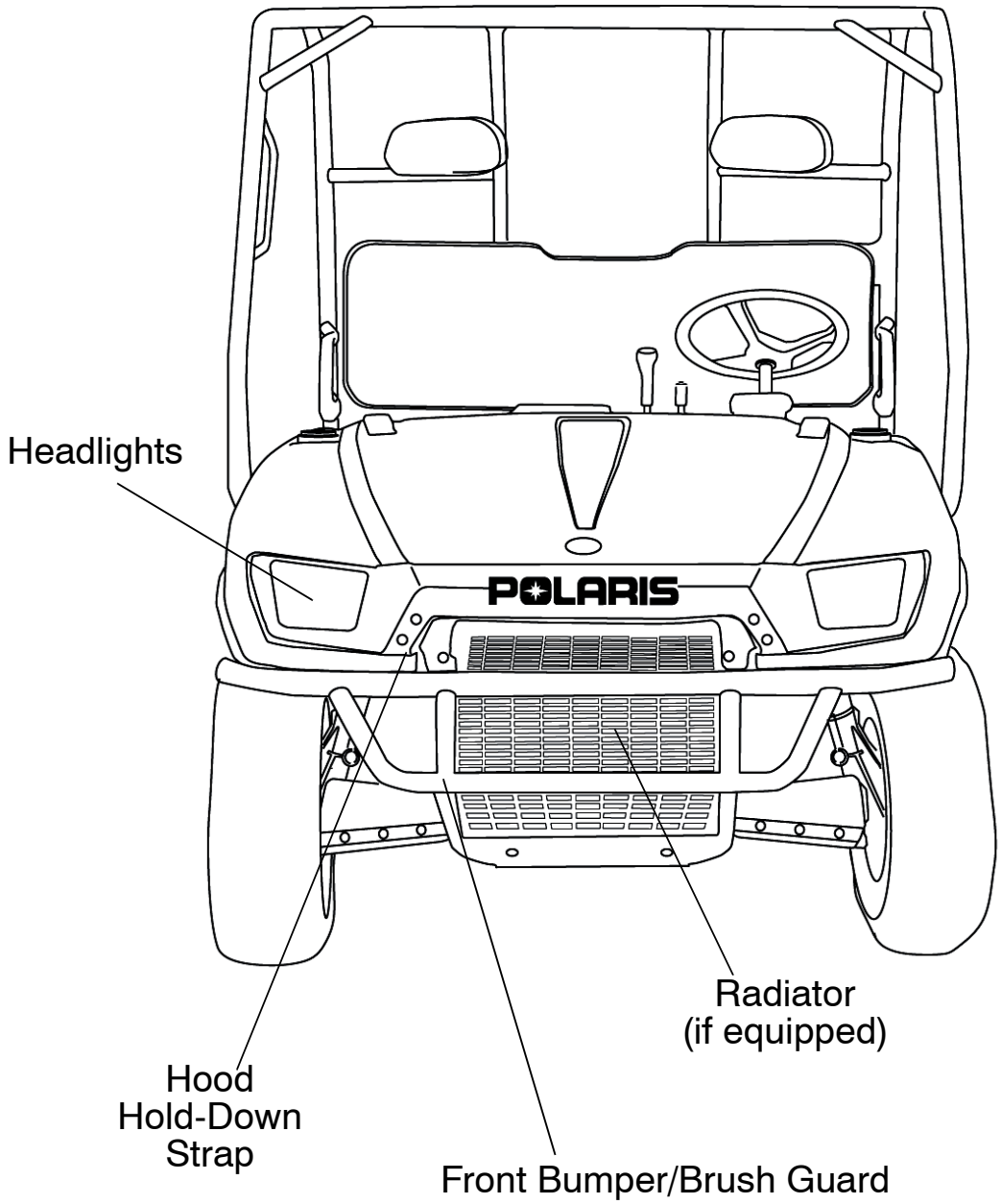

FEATURES AND CONTROLS
Component Locations

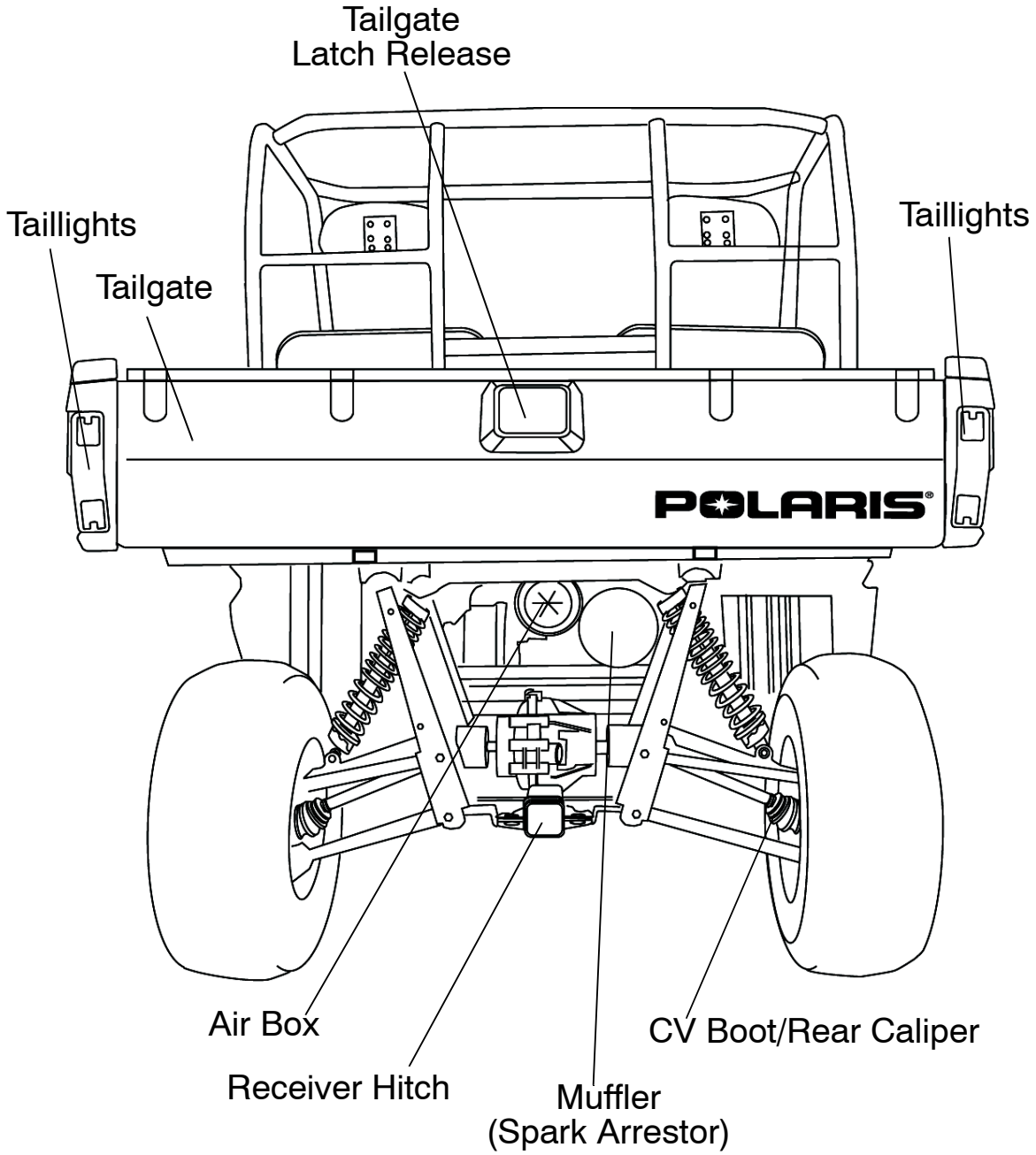

Trailer Hitch Bracket

This vehicle is equipped with a receiver hitch bracket for a trailer hitch. Trailer towing equipment is not supplied with this vehicle.

To avoid injury and property damage, always heed the warnings and towing capacities outlined on pages 52-55.

Component Locations

Instrument Cluster

Your *RANGER* is equipped with an instrument cluster that senses vehicle speed from the right front wheel. The instrument cluster measures distance in miles as well as time, hours of operation and engine RPM. Refer to page 34 for the location of the instrument cluster.

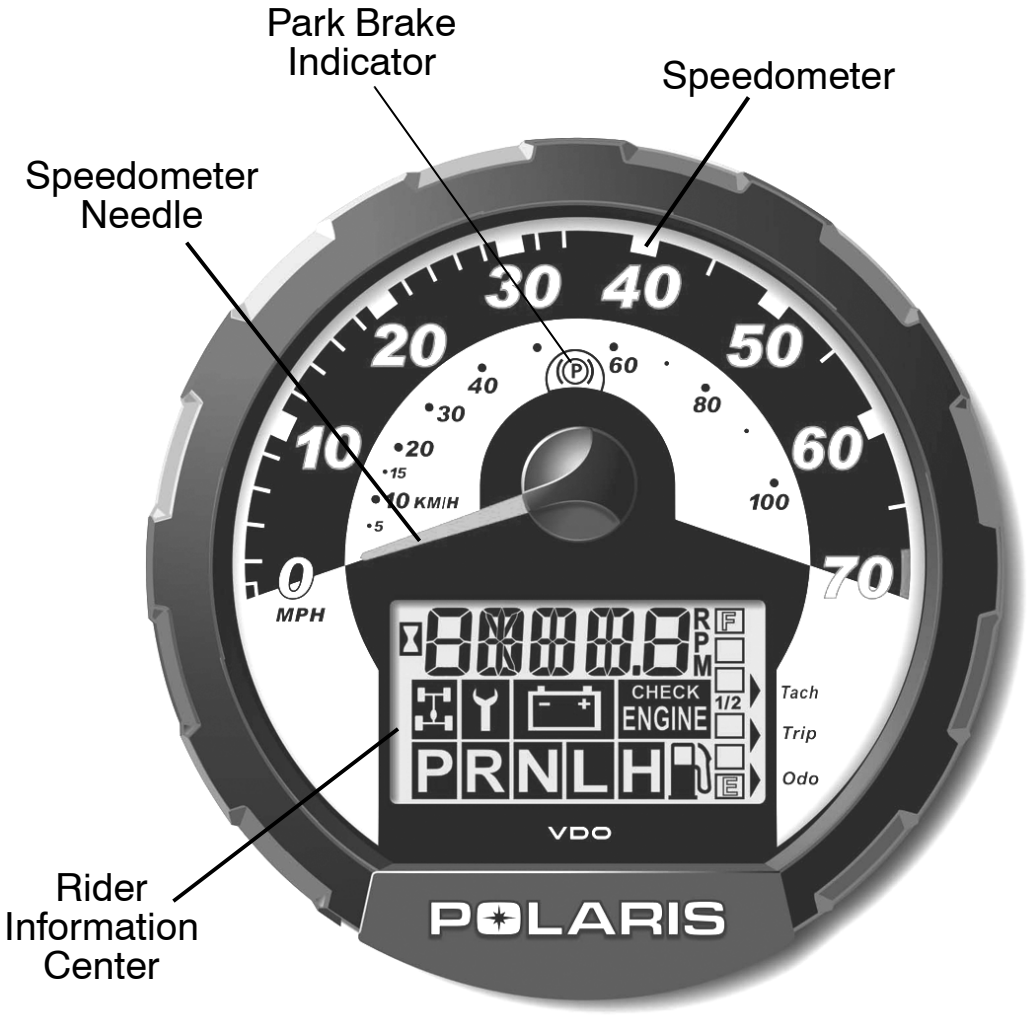

NOTE: In addition to showing vehicle speed, the speedometer needle flashes when a low fuel condition exists.

FEATURES AND CONTROLS

Instrument Cluster

Rider Information Center

The rider information center is located in the instrument cluster. All segments will light up for 2.5 seconds at start-up.

NOTE: If the instrument cluster fails to illuminate, a battery over-voltage may have occurred and the instrument cluster may have shut off to protect the electronic speedometer. If this occurs, take the vehicle to your Polaris dealer for proper diagnosis.

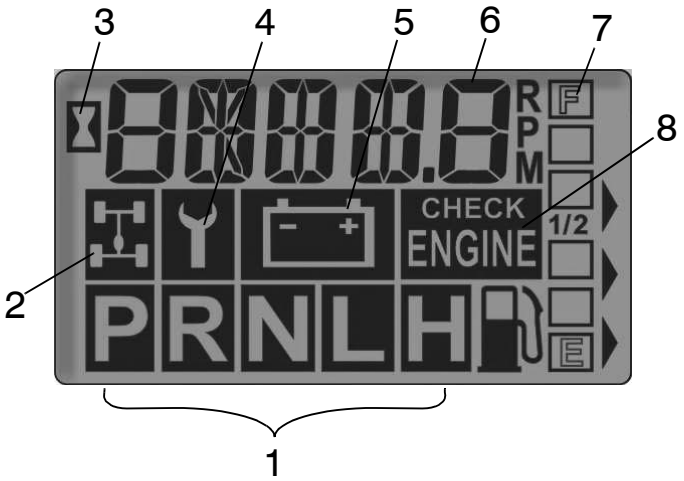

1. **Gear Indicator** - This indicator displays gear shifter position.
   H = High Gear
   L = Low Gear
   N = Neutral
   R = Reverse Gear
2. **AWD Indicator** - This indicator illuminates when the AWD switch is in the AWD position.
3. **Engine Hour Display Indicator**
4. **Service Interval/Diagnostic Mode Indicator**
5. **Low Battery and Over Voltage** - This warning usually indicates that the vehicle is operating at an RPM too low to keep the battery charged. It may also occur when the engine is at idle and high electrical load (lights, cooling fan, accessories) is applied. Drive at a higher RPM or recharge the battery to clear the warning.
6. **Odometer/Tachometer/Tripmeter/ Hour Meter/Clock**
7. **Fuel Gauge** - The segments of the fuel gauge show the level of fuel in the fuel tank. When the last segment clears, a low fuel warning is activated. All segments will flash, FUEL will display in the LCD, and the speedometer needle will blink. Refuel immediately.
8. **Check Engine Warning Indicator** - This indicator serves two purposes. The word HOT displays if the engine overheats. It also appears if an EFI-related fault occurs. Do not operate the vehicle if this warning appears. Serious engine damage could result.

Instrument Cluster

Rider Information Center

Standard Modes

Use the yellow mode button located under the speedometer to toggle through the mode options. See page 34.

Odometer Mode

The odometer records the miles traveled by the vehicle.

Trip Meter Mode

The trip meter records the miles traveled by the vehicle on each trip if it's reset before each trip. To reset the trip meter, select the trip meter mode. Press and hold the mode button (override button) until the total changes to 0.

NOTE: In the Rider Information Center, the trip meter display contains a decimal point, but the odometer displays without a decimal point.

Hour Meter Mode

This mode logs the total hours the engine has been in operation.

Tachometer Mode

The engine RPM is displayed digitally.

NOTE: Small fluctuations in the RPM from day to day may be normal because of changes in humidity, temperature and elevation.

Clock Mode

The clock displays time in a 12-hour format. To reset the clock, see page 28.

Diagnostic Mode

The wrench icon will display when the gauge is in the diagnostic mode. To exit the diagnostic mode, turn the key switch off and on. Any movement of the tires will also cause the gauge to exit the diagnostic mode.

To enter the diagnostics mode:

1. Turn the key switch off and wait 10 seconds.
2. Lock the parking brake.
3. Place the transmission in neutral.
4. Hold the mode/reverse override button and turn the key switch on. Release the switch as soon as the display is activated.
5. Use the mode button to toggle through the diagnostic screens.

Clock Screen

To reset the clock:

1. Enter the diagnostic mode.
2. Toggle to the clock screen.
3. Press and hold the mode button until the hour display flashes. Release the button.
4. Press and release the mode button once to advance the setting by one hour. Press and *hold* the mode button to advance the hours quickly.
5. When the desired hour is displayed, wait approximately four seconds, until the minute display flashes.
6. Use the same procedure to reset the minutes.
7. When the display stops flashing, the mode has been set.

NOTE: Do not turn the key switch off until the display stops flashing or the new setting will not be locked into the memory.

Instrument Cluster

Rider Information Center

Diagnostic Mode

Battery Voltage Screen

View this screen to check battery voltage level.

Tachometer Screen

View the tachometer to check engine speed.

AWD Diagnostic Screen

The gauge indicates whether or not current is flowing through the AWD coil (only on models with switchable AWD). This screen is for informational purposes only. Please see your dealer for all major repairs.

Gear Circuit Diagnostic Screen

This screen displays the resistance value (in ohms) being read at the gear switch input of the gauge. This screen is for informational purposes only. Please see your dealer for all major repairs.

Programmable service interval

When the hours of engine operation equal the programmed service interval setting, the wrench icon will flash for 5 seconds each time the engine is started. When this feature is enabled, it provides a convenient reminder to perform routine maintenance. See page 30.

NOTE: The service interval is programmed at 50 hours at the factory.

Programmable service interval

To enable or disable the service interval:

1. Enter the diagnostic mode.
2. Toggle to the service interval screen.
3. Press and hold the mode button for about seven (7) seconds, until either ON or OFF appears in the Rider Information Center, depending on your preference.

To reset the service interval:

1. Enter the diagnostic mode.
2. Toggle to the service interval screen.
3. Press and hold the mode button for 2-3 seconds, until the wrench icon flashes. Release the button.
4. Press and release the mode button once to advance the setting by one hour. Press and *hold* the mode button to advance the hours quickly.

NOTE: If you scroll past the intended number, press and hold the button until the hours cycle back to zero.

5. When the desired setting is displayed, wait until the wrench icon stops flashing. The new service interval is now programmed.

Miles/Kilometers toggle

The display in the tripmeter and odometer can be changed to display either standard or metric units of measurement.

1. Enter the diagnostic mode.
2. Toggle to the screen that displays either kilometers (KM) or miles (MP).
3. Press and hold the mode button until the letters flash, then press and release the button once. When the display stops flashing, the mode has been set

Instrument Cluster

Rider Information Center

Downloading Codes

The EFI diagnostic mode is for informational purposes only. Please see your Polaris dealer for all major repairs.

See page 32 for Blink Codes and Failure Descriptions. Use the following procedure to download blink codes (failure codes) from the EFI module.

1. Engage the parking brake.
2. Stop the engine.
3. Turn the key switch to the ON position.
4. Turn the key switch off and on three times in less than five seconds, then leave the switch on. Any blink code numbers stored in the EFI module will display, one at a time, on the screen. The number “61” and the word “END” displays after all codes have been transmitted.

Downloading Codes

Blink Code	Failure Description
--	No RPM Signal
21	Loss of Synchronization
45	Barometric Pressure Sensor: Circuit Low Input
46	Barometric Pressure Sensor: Circuit High Input
22	TPS: Open or Short Circuit to Ground
22	TPS: Short Circuit to Battery
23	RAM Error: Defective ECU
42	Engine Temp Sensor Circuit: Short to Ground
42	Engine Temp Sensor Circuit: Open or Short to Battery
51	Injector 1: Open Load
51	Injector 1: Short Circuit to Ground
51	Injector 1: Short Circuit to Battery
52	Injector 2: Open Load
52	Injector 2: Short Circuit to Ground
52	Injector 2: Short Circuit to Battery
53	Rear Differential: Open Load (*RANGER* 4X4 only)
53	Rear Differential: Short Circuit to Ground (*RANGER* 4X4 only)
53	Rear Differential: Short Circuit to Battery (*RANGER* 4X4 only)
54	Engine Temp Lamp: Open Load
54	Engine Temp Lamp: Short Circuit to Ground
54	Engine Temp Lamp: Short Circuit to Battery
55	Diag Lamp: Open Load
55	Diag Lamp: Short Circuit to Ground
55	Diag Lamp: Short Circuit to Battery
56	Pump Relay: Open Load
56	Pump Relay: Short Circuit to Ground
56	Pump Relay: Short Circuit to Battery
57	Reverse Beeper: Open Load
57	Reverse Beeper: Short Circuit to Ground
57	Reverse Beeper: Short Circuit to Battery
58	Cooling Fan: Open Load
58	Cooling Fan: Short Circuit to Ground
58	Cooling Fan: Short Circuit to Battery
41	Intake Air Temp Sensor: Open or Short Circuit to +Sensor Voltage
41	Intake Air Temp Sensor: Short Circuit to Ground
61	END

Seat Removal

Pull up on the front of the seat and slide it toward the front of the vehicle.

Install the seat by sliding the tabs into the rear of the seat base. Push down firmly on the front of the seat until the pins are fully seated into the grommets.

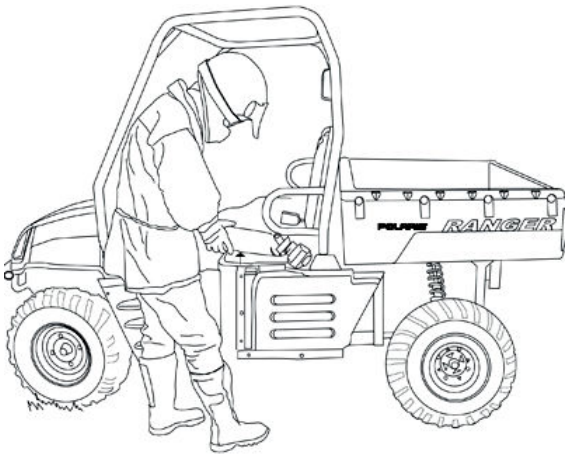

Fuel Cap

The fuel tank filler cap is located on the right-hand side of the vehicle near the passenger seat. When refueling, always use either leaded or unleaded gasoline with a minimum pump octane number of 87 R+M/2 octane. *Do not use E-85 fuel.*

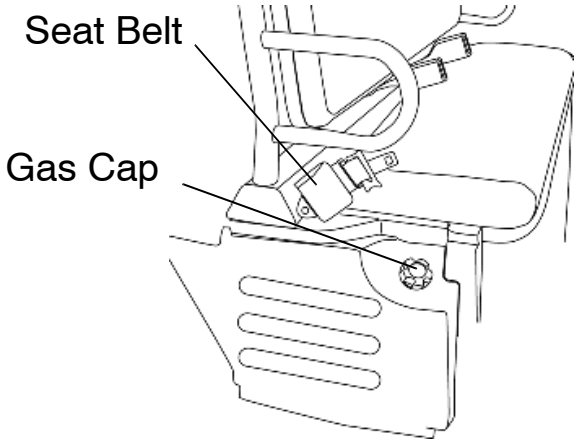

Seat Belts

The *RANGER* is equipped with lap-style seat belts for the operator and passenger.

⚠ WARNING

Falling from a moving vehicle could result in serious injury or death. Always fasten your seat belt securely before operating or riding in the *RANGER*.

Passengers under five years of age require special restraints, which are not available with this vehicle. No person under the age of five may ride in the *RANGER*.

To wear the seat belt properly, follow this procedure:

1. Place the belt across your lap as low on your hips as possible. Make sure that the belt is not twisted.
2. Push the latch plate into the buckle until it clicks.
3. Release the strap, it will self-tighten.

NOTE: The center belt must be tightened manually by pulling on the strap.

4. To release the seat belt, press the square red button in the buckle's center.

FEATURES AND CONTROLS
Console

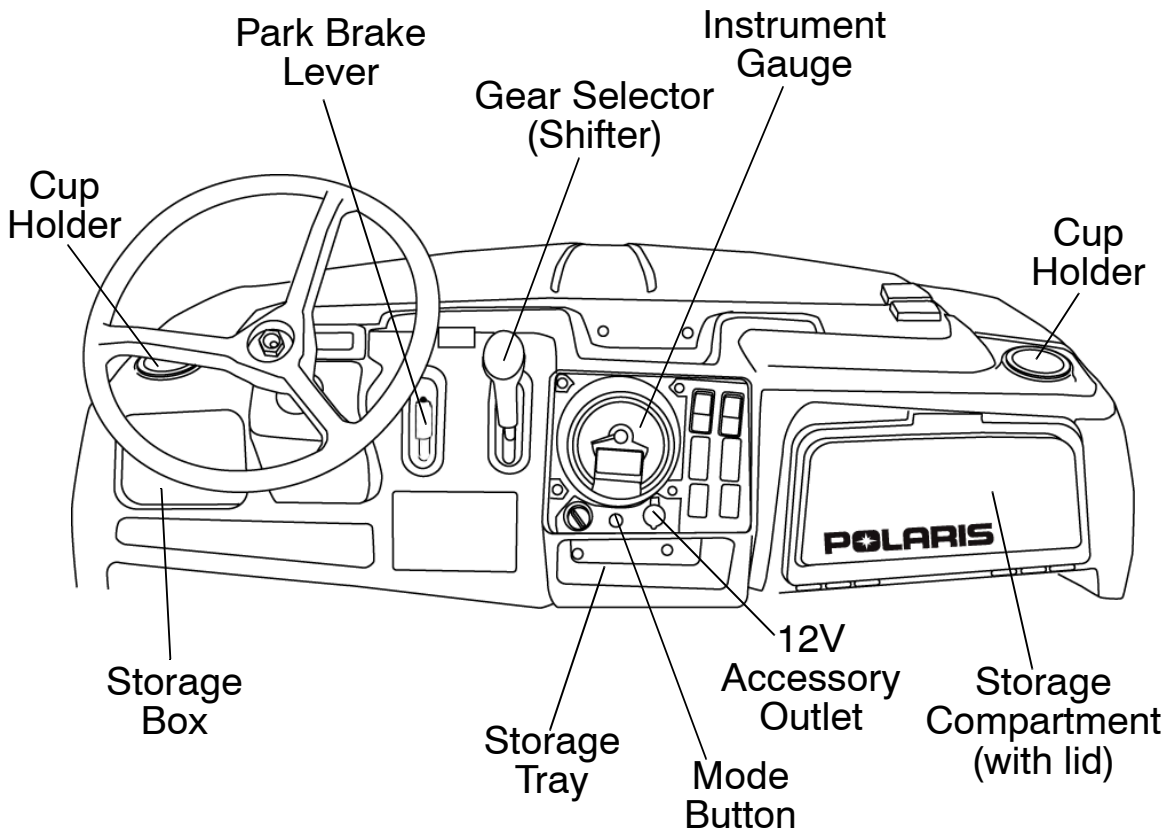

Auxiliary Outlet

The 12-volt accessory plug receptacle has spade connections on the back that may be used to power an auxiliary light or other optional accessories or lights. The connections are behind the console, under the hood.

Mode Button

The yellow button located directly under the speedometer is used to toggle through mode options available such as odometer, trip meter, hour meter, tachometer and clock. See page 27 for operation of the modes.

Gear Selector

H: High Gear

L: Low Gear

N: Neutral

R: Reverse

NOTE: Low gear is the primary driving range for the *RANGER*. High gear is intended for use on hard-packed surfaces with light loads.

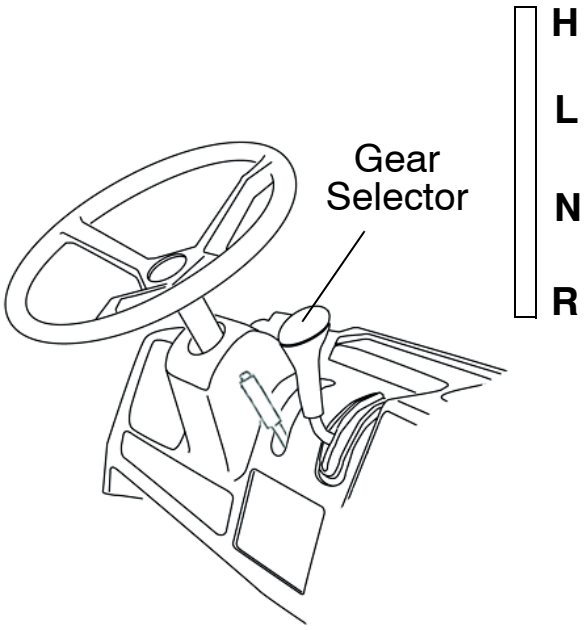

To change gears, stop the vehicle, and with the engine idling, move the lever to the desired gear. Do not attempt to shift gears with engine speed above idle or while the vehicle is moving.

NOTE: Maintaining shift linkage adjustment is important to assure proper transmission function. See your dealer if you experience any shifting problems.

CAUTION
Do not attempt to shift the transmission while the vehicle is moving or damage to the transmission could result. Always shift when the vehicle is stationary and the engine is at idle.

Brake Pedal

Depress the brake pedal to slow or stop the vehicle. Apply the brakes while starting the engine.

Throttle Pedal

Push the pedal down to increase engine speed. Spring pressure returns the pedal to the rest position when released. Always check that the throttle pedal returns normally before starting the engine. Make sure there's adequate throttle pedal freeplay. See page 88 for throttle pedal adjustment procedures.

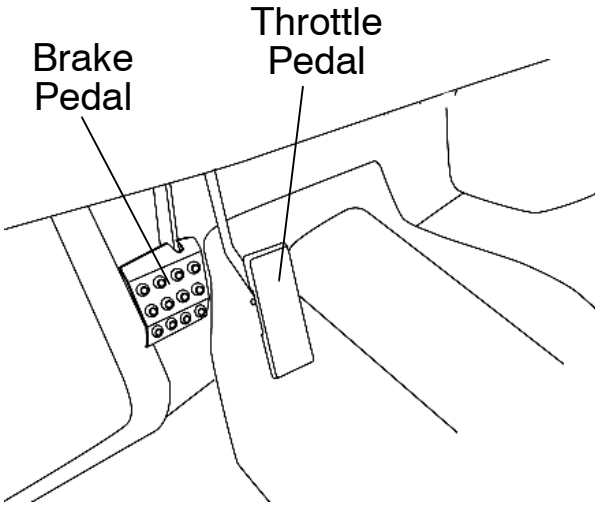

Park Brake Lever

To help prevent the vehicle from rolling, engage the park brake when parking the vehicle. When the park brake is fully engaged and the park brake indicator is illuminated, engine speed is limited to 1300 RPM in all gears, including neutral. If throttle is applied, this limiting feature prevents operation, which protects the park brake pads from excessive wear.

NOTE: This feature will not operate properly if the park brake connector or switch (under the hood) malfunctions or becomes disconnected, or if the switch has moved. Check for disconnection, then see your dealer promptly if this feature fails to operate properly.

Always apply the service brakes before engaging or releasing the park brake.

1. Apply the brakes.
2. Pull the park brake lever downward as far as possible.
3. To release the park brake, apply the brakes. Press the park brake release inward and move the lever upward as far as possible.

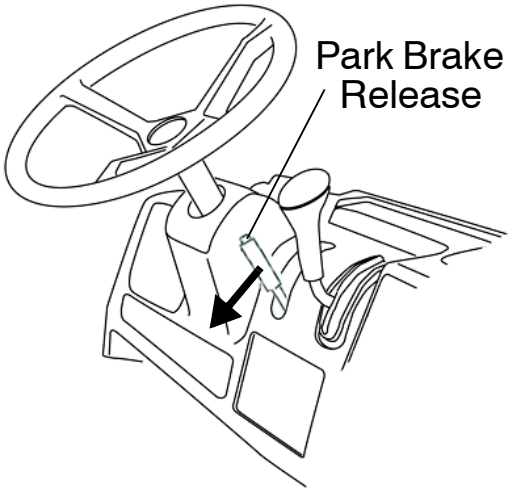

⚠ WARNING

Operating the vehicle while the park brake is engaged could cause loss of control and result in serious injury or death. Always disengage the park brake before operating the vehicle.

When the park brake is fully engaged and the park brake indicator is illuminated, engine speed is limited to 1300 RPM in all gears, including neutral. If throttle is applied, this limiting feature prevents operation, which protects the park brake pads from excessive wear.

Inspect and adjust park brake cable tension after the first 25 hours of operation and every 100 hours thereafter to ensure proper cable tension. See page 90.

NOTE: This feature will not operate properly if the park brake connector or switch (under the dash) malfunctions or becomes disconnected, or if the switch has moved. Check for disconnection, then see your Polaris service technician promptly if this feature fails to operate properly.

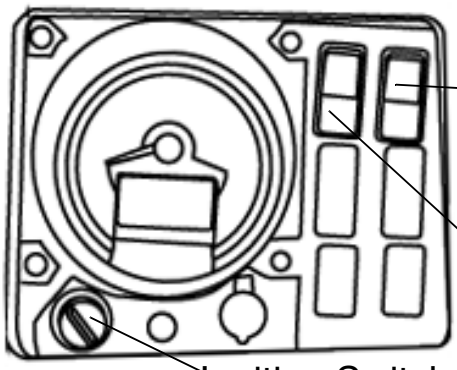

Ignition Switch

The ignition switch is a three-position, key-operated switch. The key can be removed from the switch when it is in the OFF position.

OFF	The engine is off. Electrical circuits are off, except Acc, 12V.
ON	Electrical circuits are on. Electrical equipment can be used.
START	Turn the key to the START position to engage the electric starter. The key returns to the ON position when released.

⚠ WARNING
Leaving the keys in the ignition can lead to unauthorized use of the vehicle resulting in serious injury or death. Always remove the ignition key when the vehicle is not in use.

Switches

Light Switch

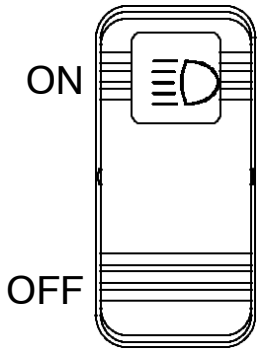

The ignition switch key must be in the ON/RUN position to operate the headlights. Use the light switch to turn the headlights on or off.

AWD/Differential Lock Switch

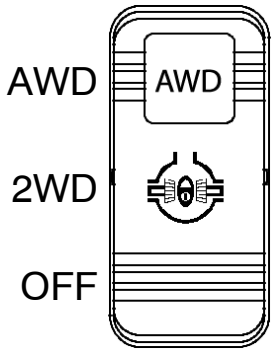

The AWD/Differential Switch has three positions: All Wheel Drive (AWD), Differential Lock/Two Wheel Drive (2WD) and Off (1WD/turf mode).

Press the top of the rocker switch to engage All Wheel Drive (AWD). See page 58 for AWD operating instructions.

Move the rocker switch to the center position (4X4 models) to lock the differential and operate in two wheel drive (2WD). See page 57 for Differential Lock operating instructions.

Press the bottom of the switch to unlock the differential and allow the rear drive wheels to operate independently (1WD). This mode of operation is well suited to turf driving or when active traction is not needed.

OPERATION

Break-In Period

The break-in period for your new Polaris *RANGER* is the first twenty hours of operation, or the time it takes to use the first two tanks full of gasoline. No single action on your part is as important as a proper break-in period. Careful treatment of a new engine will result in more efficient performance and longer life for the engine. Perform the following procedures carefully.

CAUTION
Excessive heat build-up during the first three hours of operation will damage close-fitted engine parts. Do not operate at full throttle or high speeds for extended periods during the first three hours of use.

Engine and Drivetrain Break-in

1. Fill the fuel tank with gasoline. Heed the gasoline warnings on page 21.
2. Check the oil level. See page 68. Add the recommended oil as needed to maintain the oil level in the normal (safe) operating range.
3. Drive slowly at first. Select an open area that allows room to familiarize yourself with vehicle operation and handling.
4. Vary throttle positions. Do not operate at sustained idle.
5. Perform regular checks on fluid levels, controls and areas outlined on the daily pre-ride inspection checklist. See page 41.
6. Pull only light loads.
7. During the break-in period, change both the oil and the filter at 25 hours.
8. Inspect and adjust park brake cable tension after the first 25 hours of operation and every 100 hours thereafter to ensure proper cable tension. See page 90.

PVT Break-in (Clutches/Belt)

A proper break-in of the clutches and drive belt will ensure a longer life and better performance. Break in the clutches and belt by operating at slower speeds during the break-in period as recommended. Pull only light loads. Avoid aggressive acceleration and high speed operation during the break-in period.

Pre-Ride Inspection

⚠ WARNING
If a proper inspection is not done before each use, severe injury or death could result. Always inspect the vehicle before each use to ensure it's in proper operating condition.

Item	Remarks	Page
Brake system/pedal travel	Ensure proper operation	36 89
Brake fluid	Ensure proper level	89
Front suspension	Inspect, lubricate if necessary	65
Rear suspension	Inspect, lubricate if necessary	65
Steering	Ensure free operation	91
Tires	Inspect condition and pressure	5 93
Wheels/fasteners	Inspect, ensure fastener tightness	93
Frame nuts, bolts, fasteners	Inspect, ensure tightness	-
Fuel and oil	Ensure proper levels	26 68
Coolant level	Ensure proper level	80 81
Coolant hoses	Inspect for leaks	-
Throttle	Ensure proper operation	87
Indicator lights/switches	Ensure operation	38
Air filter, pre-filter	Inspect, clean	85
Air box sediment tube	Drain deposits whenever visible	85
Headlamp	Check operation, apply Polaris dielectric grease when lamp is replaced	95
Brake light/tail lamp	Check operation, apply Polaris dielectric grease when lamp is replaced	96

OPERATION
Starting the Engine

⚠ WARNING

Engine exhaust contains poisonous carbon monoxide and can cause loss of consciousness resulting in severe injury or death. Never run an engine in an enclosed area.

1. Sit in the driver's seat and fasten the seat belt.
2. Engage the park brake.
3. Shift the transmission to neutral.
4. Apply the brakes.

NOTE: Do not press the throttle pedal while starting the engine.

5. Turn the ignition key past the ON/RUN position to START. Engage the starter for a maximum of five seconds. Release the key when the engine starts.
6. If the engine does not start within five seconds, release the ignition switch and wait five seconds. Repeat steps 5 and 6 until the engine starts.
7. Vary the engine RPM slightly with the throttle to aid in warm up until the engine idles smoothly.

CAUTION

Operating the vehicle immediately after starting could cause engine damage. Allow the engine to warm up for several minutes before operating the vehicle.

Stopping the Engine

1. Release the throttle pedal completely and brake to a complete stop.
2. Turn the engine off.
3. Engage the park brake.

⚠ WARNING
A rolling vehicle can cause property damage and serious injury. Always engage the park brake after stopping the engine.

Braking

1. Release the throttle pedal completely.
2. Press on the brake pedal evenly and firmly.

NOTE: Practice starting and stopping (using the brakes) until you're familiar with the controls.

NOTE: When the throttle pedal is released completely and the engine speed drops near an idle, the vehicle has no engine braking.

⚠ WARNING
Failure to allow for increased braking distance when hauling cargo or towing a trailer may result in accident and injury. Always slow down and allow additional braking distance when towing or hauling cargo.

Driving Procedure

1. Sit in the driver's seat and fasten the seat belt.
2. After starting the engine and allowing it to warm up, apply the service brakes, and shift the transmission into gear.
3. Check your surroundings and determine your path of travel.
4. Release the park brake.
5. Keeping both hands on the steering wheel, slowly release the brakes and depress the throttle with your right foot to begin driving.
6. Drive slowly. Practice maneuvering and using the throttle and brakes on level surfaces.

NOTE: Low gear is the primary range for operating the *RANGER*. High gear is intended for use on hard-packed surfaces with light loads.

Driving Safely

Driving on Slippery Surfaces

When driving on slippery surfaces such as wet trails, loose gravel, or ice, be alert for the possibility of skidding and sliding. Under these conditions, follow these precautions:

1. Slow down when entering slippery areas.
2. Maintain a high level of alertness, reading the trail and avoiding quick, sharp turns, which can cause skids.
3. Correct a skid by turning the steering wheel in the direction of the skid.
4. Drive with AWD engaged (if equipped) to assist in controlling the vehicle.

CAUTION

Severe damage to the drive train may occur if the AWD is engaged while the wheels are spinning. Always allow the wheels to stop spinning before engaging AWD.

⚠ WARNING

Failure to exercise care when operating on slippery surfaces can result in loss of tire traction and cause loss of control, accident, and serious injury or death.

Never apply the brakes during a skid.

Do not operate on excessively slippery surfaces.

Always reduce speed and use additional caution when operating on slippery surfaces

OPERATION
Driving Safely
Driving Uphill

Whenever traveling uphill, follow these precautions:

1. Always travel straight uphill.
2. Avoid steep hills (15° maximum).
3. Keep both feet on the floor.
4. Proceed at a steady rate of speed and throttle opening.

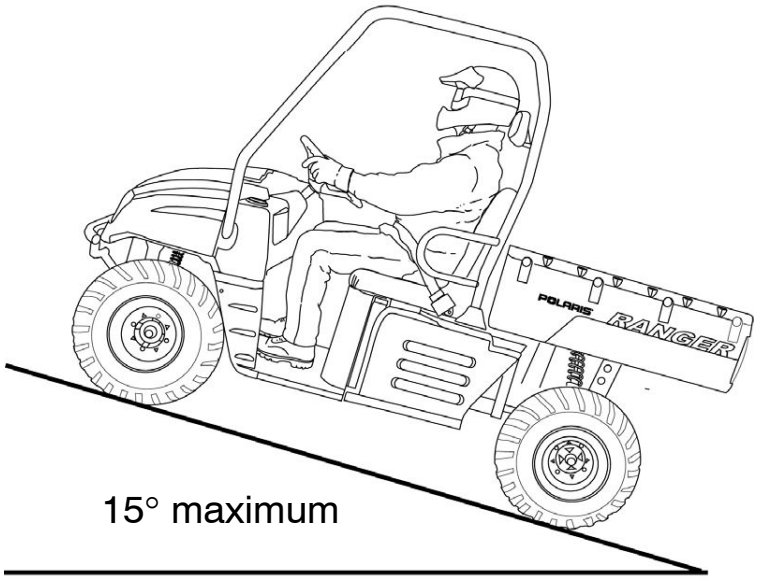

⚠ WARNING

Climbing hills improperly can cause loss of control or vehicle overturn. Always check the terrain carefully before climbing a hill.

Braking and handling are greatly affected when operating in hilly terrain. Improper procedure could cause loss of control or overturn and result in serious injury or death.

Avoid climbing steep hills (15° maximum).

Use extreme caution when operating on hills, and follow proper operating procedures outlined in the owner's manual.

Never climb hills with excessively slippery or loose surfaces.

Never open the throttle suddenly.

Never go over the crest of a hill at high speed. An obstacle, a sharp drop, or another vehicle or person could be on the other side of the hill.

Driving Safely

Driving on a Sidehill (Sidehilling)

⚠ WARNING

Crossing hillsides or turning on hills can result in loss of control or vehicle overturn, resulting in severe injury or death. Avoid crossing the side of a hill when possible. When unavoidable, exercise extreme caution. Avoid operating on steep hills (15° maximum).

Driving Downhill

Whenever descending a hill, follow these precautions:

1. Proceed directly downhill.
2. Slow down.
3. Apply the brakes *slightly* to aid in slowing.

⚠ WARNING

Traveling downhill improperly could cause loss of control or vehicle overturn. Always check the terrain carefully before descending a hill.

Never descend a hill at high speed. Excessive speed may result in loss of vehicle control and lead to serious injury or death. Always operate slowly when traveling downhill.

Avoid descending a hill at an angle, which would cause the vehicle to lean sharply to one side. Travel straight downhill when possible.

Driving Through Water

⚠ WARNING

The large tires on your *RANGER* may cause the vehicle to float in deep or fast-flowing water, which could result in loss of control and lead to serious injury or death. Never cross deep or fast-flowing water with your *RANGER*.

Your Polaris *RANGER* can operate through water up to a maximum recommended depth equal to the floorboards. Follow these procedures when operating through water:

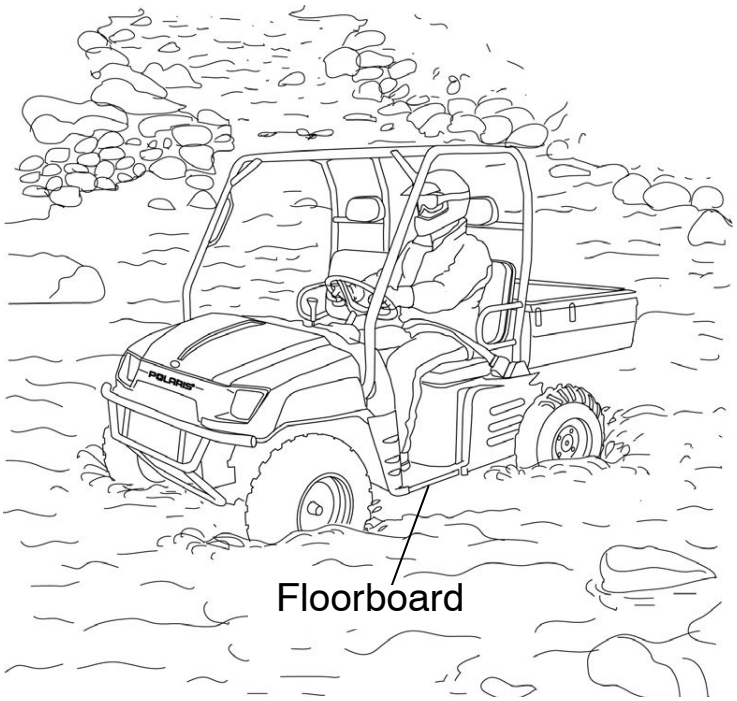

1. Always determine water depths and current before entering.
2. Choose a crossing where both banks have gradual inclines.
3. Proceed slowly, avoiding rocks and obstacles.
4. After leaving water, always dry the brakes by applying light pressure to the pedal repeatedly until braking action is normal.

NOTE: After running your vehicle in water, it's *critical* that you perform the services outlined in the Periodic Maintenance Chart beginning on page 60. Give special attention to engine oil, transmission oil, front and rear gearcases, and all grease fittings.

CAUTION

Immersion can result in major damage if the vehicle isn't serviced correctly and promptly. After immersion, always take the vehicle to your dealer service. *Do not start the engine!*

If it's impossible to bring the vehicle to your dealer before starting the engine, perform the service outlined on page 97, and take the vehicle to your dealer at the first opportunity.

Driving Safely

Driving Over Obstacles

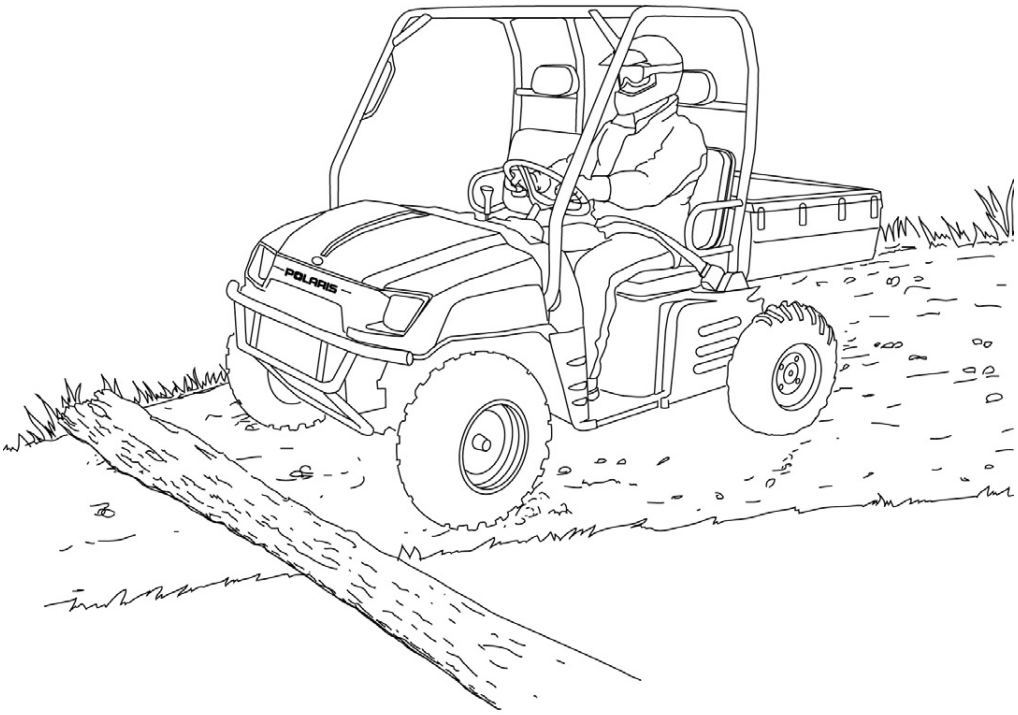

Be alert! Look ahead and learn to read the terrain you're traveling on. Watch for hazards such as logs, rocks and low hanging branches.

⚠ WARNING
Severe injury or death can result if your vehicle suddenly comes in contact with a hidden obstacle. Not all obstacles are immediately visible. Reduce speed and travel with caution in unfamiliar terrain.

Driving in Reverse

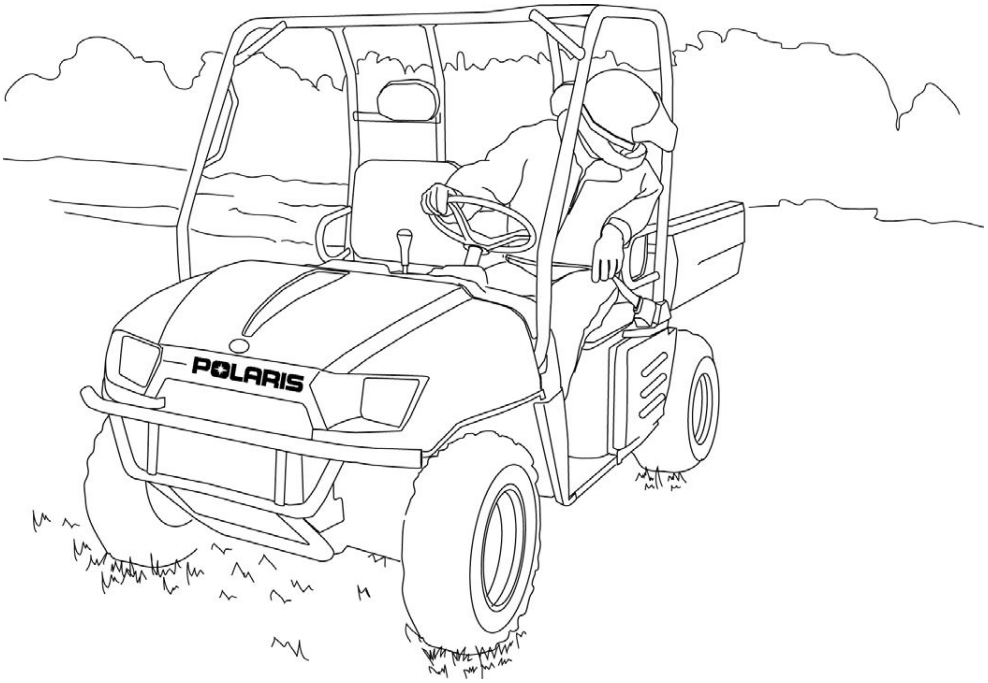

Follow these guidelines when operating in reverse:

1. Back slowly.
2. Apply the brakes lightly for stopping.
3. Avoid turning at sharp angles.
4. Always avoid backing downhill.
5. Never open the throttle suddenly while backing.
6. Always inspect left and right fields of vision before backing.

⚠ WARNING
Failure to use caution when operating in reverse can result in serious injury or death. Before shifting into reverse, always check for obstacles or people behind the vehicle and follow the reverse operation procedures outlined in this manual. Always back slowly.

Driving Safely

Parking on an Incline

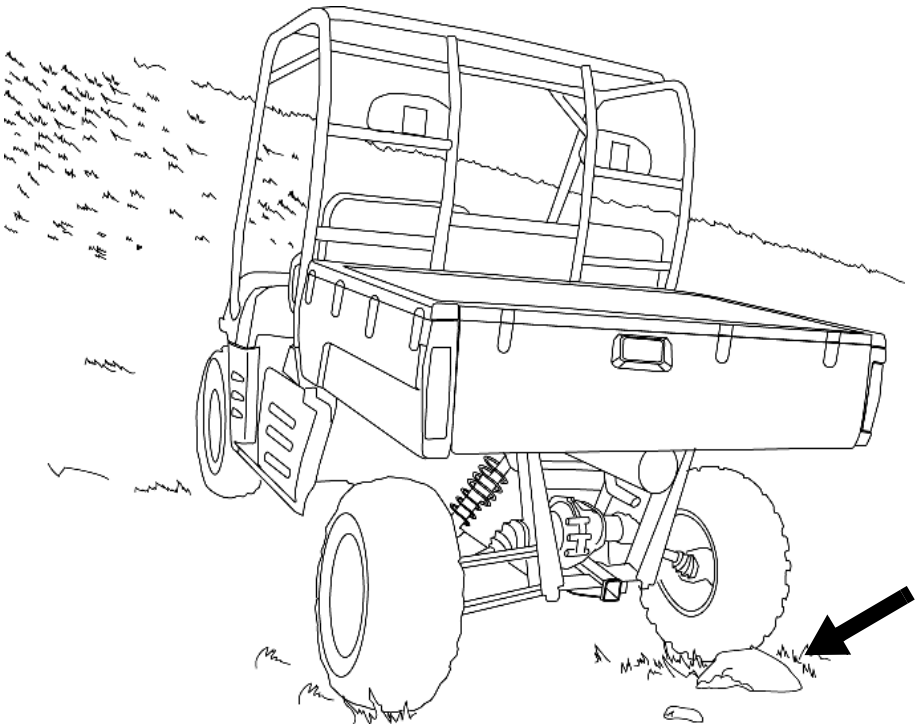

Avoid parking on an incline if possible. If it's unavoidable, follow these precautions:

1. Place the transmission in gear.
2. Engage the park brake.
3. Turn the engine off.
4. Block the rear wheels on the downhill side.

⚠ WARNING

A rolling vehicle can cause property damage and serious injury. Always engage the park brake after stopping the engine. Always block the downhill side of the wheels if leaving the vehicle on a hill, or park the vehicle in a sidehill position instead.

Operating the vehicle while the park brake is engaged could cause loss of control and result in serious injury or death. Always disengage the park brake before operating the vehicle.

Hauling Cargo

⚠ WARNING

Hauling cargo improperly can alter vehicle handling and may cause loss of control or brake instability, which can result in serious injury or death. Always follow these precautions when hauling cargo:

REDUCE SPEED AND ALLOW GREATER DISTANCES FOR BRAKING WHEN HAULING CARGO.

Always load the cargo box with the load as far forward and as low as possible.

When operating over rough or hilly terrain, reduce speed and cargo to maintain stable driving conditions.

Always operate the vehicle with extreme care when hauling or towing loads.

Slow down and drive in the lowest gear available.

SECURE ALL LOADS BEFORE OPERATING. Unsecured loads can create unstable operating conditions, which could result in loss of control of the vehicle.

OPERATE ONLY WITH STABLE AND SAFELY ARRANGED LOADS. When handling off-centered loads that cannot be centered, securely fasten the load and operate with extra caution. Always attach the tow load to the hitch point designated for your vehicle.

HEAVY LOADS CAN CAUSE BRAKING AND CONTROL PROBLEMS. Use extreme caution when applying brakes with a loaded vehicle. Avoid terrain or situations that may require backing downhill.

USE EXTREME CAUTION when operating with loads that extend over the rack sides. Stability and maneuverability may be adversely affected, causing the vehicle to overturn.

DO NOT TRAVEL FASTER THAN THE RECOMMENDED SPEEDS. Vehicle should never exceed 10 mph (16 kph) while towing a load on a level grass surface. Vehicle speed should never exceed 5 mph (8 kph) when towing loads in rough terrain, while cornering, or while ascending or descending a hill.

Driving Safely

Hauling Cargo

The *RANGER* has been designed to carry or tow specific capacities. Always read and understand the load distribution warnings listed on the warning labels. Never exceed the following capacities.

Model	Maximum Capacities (Level Ground)	Cargo Box
RANGER 4X4 EFI	1500 lbs. (681 kg)	1000 lbs. (454 kg)
RANGER 6X6 EFI	1750 lbs. (794 kg)	1250 lbs (567 kg)

⚠ WARNING

Driving with passengers in the cargo box can result in severe injury or death.

Never allow passengers to ride in the cargo box. Passengers must always ride in the cab with seat belts fastened securely.

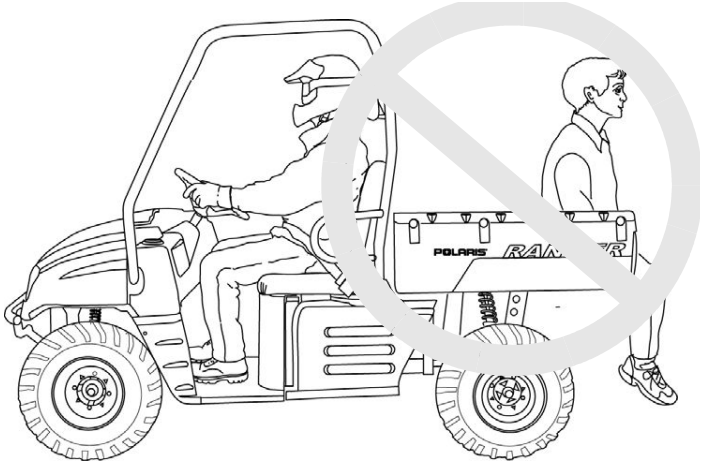

Dumping the Cargo Box

⚠ WARNING

Operating the vehicle while the cargo box is raised could result in severe injury. The box could close unexpectedly and cause injury to the driver or passenger. The rear tires will also catch the rear of a raised box, damaging the vehicle and creating hazardous driving conditions. Never operate this vehicle with the cargo box in the raised position.

1. Select a level site to dump the cargo box. Do not attempt to dump or unload the vehicle while parked on an incline.
2. Engage the park brake.
3. Dismount the vehicle.
4. Ensure that the cargo is positioned evenly or toward the front of the cargo box.

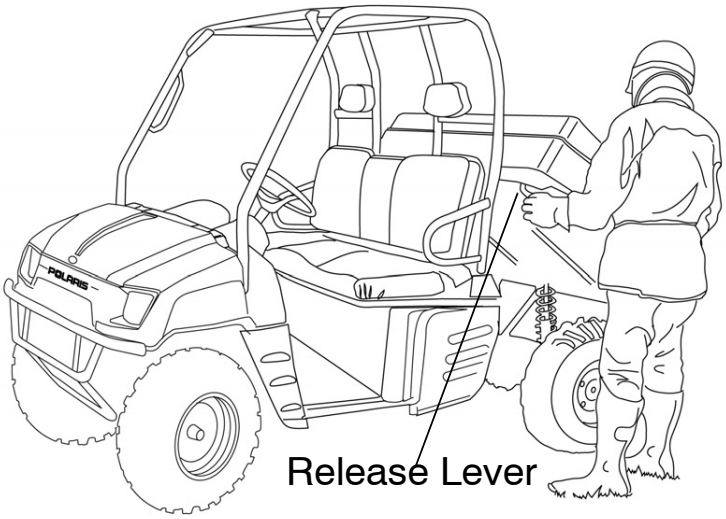

5. Release the tailgate by pulling up on the tailgate latch.
6. Stand clear and pull up on the cargo box release lever.
7. Lift the front of the cargo box to dump the cargo.
8. Lower the cargo box and push down securely to latch.

⚠ WARNING

If the weight distribution on the box is located toward the rear of the box when the release lever is pulled forward, the box may dump unexpectedly and cause serious injury to the operator or bystanders.

Never operate the dump lever without ensuring that the load is positioned evenly or at the front of the box.

Driving Safely

Towing Loads

⚠ WARNING

Towing improperly can alter vehicle handling and may cause loss of control or brake instability, which can result in serious injury or death. Always follow these precautions when towing:

Never load more than 150 lbs. (68.1 kg) tongue weight on the towing bracket.

Do not operate the vehicle faster than 10 mph (16 km/h) when towing. See page 52. Towing a trailer increases braking distance.

Do not tow more than the recommended weight for the vehicle. See the towing capacity chart below and the specifications charts beginning on page 110.

Attach a trailer to the trailer hitch bracket only. Do not attach a trailer to any other location or you may lose control of the vehicle.

Never tow a trailer on a grade steeper than 15°.

Model	Total Towed Load Weight (Level Ground)	Total Towed Load Weight (15° grade)	Total Hitch Vertical Weight	Maximum Towing Speed
RANGER 4x4 700 EFI	2000 lbs. (907 kg)	850 lbs. (386 kg)	150 lbs. (68.1 kg)	10 mph (16 kph)
RANGER 6X6 700 EFI	2000 lbs. (907 kg)	1000 lbs. (454 kg)	150 lbs. (68.1 kg)	10 mph (16 kph)

Belt Life

To extend belt life, use the lowest gear possible when hauling or towing heavy cargo.

Parking the Vehicle

⚠ WARNING

A rolling vehicle can cause property damage and serious injury. Always engage the park brake after stopping the engine.

1. Stop the vehicle on a level surface.
2. Turn the engine off.
3. Engage the park brake.
4. Remove the ignition switch key to prevent unauthorized use.

⚠ WARNING

Gasoline is extremely flammable and can be explosive under certain conditions. When parking inside a garage or other structure, be sure that the structure is well ventilated and that the vehicle is not close to any source of flame or sparks, including any appliance with pilot lights.

Differential Lock (4X4 Models)

Locking the Differential

The 4X4 rear axle is equipped with a lockable differential that allows the operator to choose between an open differential or a closed differential. Locking the differential in slippery or low traction conditions helps improve traction.

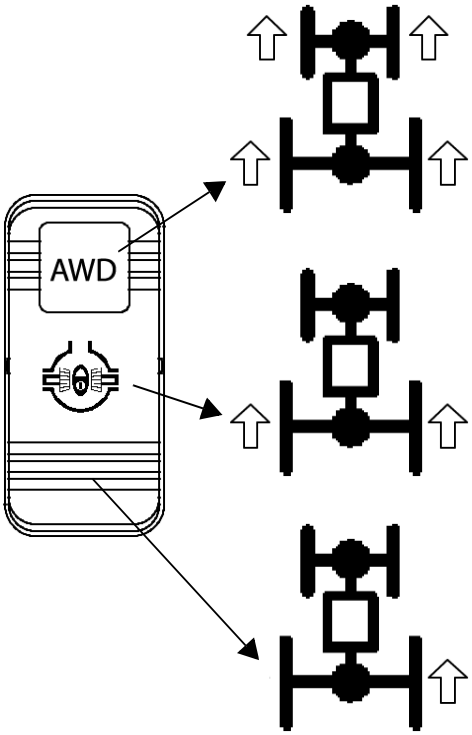

Press the top of the rocker switch to engage All Wheel Drive (AWD).

Move the rocker switch to the center position to lock the differential and operate in two wheel drive (2WD).

Press the bottom of the switch to unlock the differential and allow the rear drive wheels to operate independently (1WD). This mode of operation is well suited to turf driving or whenever aggressive traction is not required.

CAUTION
Damage to the differential can occur if it is engaged while the vehicle is traveling at high speeds or while the rear wheels are spinning. Slow the vehicle to nearly stopped before engaging the differential.

OPERATION
All Wheel Drive (AWD)

The illuminated amber AWD switch indicates that the vehicle is in AWD.

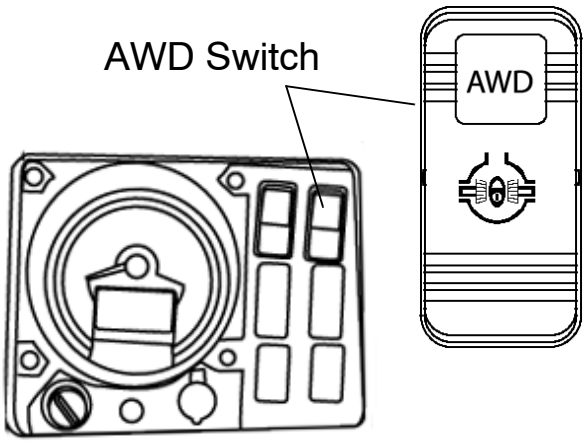

When the AWD switch is on, the front wheels will automatically engage any time the rear wheels lose traction. When the rear wheels regain traction, the front wheels will automatically disengage. There is no limit to the length of time the vehicle may remain in AWD.

When the *RANGER* 6X6 AWD switch is in the off position, the vehicle is in two-wheel drive at all times.

When the *RANGER* 4X4 AWD switch is in the off position, the differential is open and the vehicle is in one-wheel drive for operation on turf or when active traction is not needed. When the AWD switch is in the center position the differential is locked and the vehicle is in two-wheel drive. See page 57.

The AWD switch may be turned on or off while the vehicle is moving. If the switch is turned off while the front hubs are driving, they will not release until the rear wheels regain traction.

CAUTION
Switching to AWD while the rear wheels are spinning may cause severe drive shaft and clutch damage. Always switch to AWD while the rear wheels have traction or are at rest.

Disengaging AWD

Under certain conditions, it may be possible for the front gearcase to remain locked unnecessarily. This condition causes increased steering effort and some vehicle speed restriction. If the front gearcase remains locked after following these instructions, return the vehicle to your dealer for service.

1. Stop the vehicle.
2. Operate in reverse for at least 10 feet.
3. Stop completely.
4. Shift into low gear and drive forward.

Noise Emission Control System

Do not modify the engine, intake or exhaust components, as doing so may affect compliance with U.S.A. EPA noise control requirements (40 CFR 205) and local noise level requirements.

Operation on Public Lands in the U.S.A.

Your Polaris vehicle has a spark arrestor that was tested and qualified to be in accordance with the USDA Forest Service Standard 5100-1C. Federal law requires that this spark arrestor be installed and functional when the vehicle is operated on public lands.

Operation of off-road vehicles on public lands in the U.S.A. is regulated by 43 CFR 8343.1(c). Violations are subject to monetary penalties. Federal regulations can be viewed online at www.gpoaccess.gov/ecfr/.

Crankcase Emission Control System

This engine is equipped with a closed crankcase system. Blow-by gases are forced back to the combustion chamber by the intake system. All exhaust gases exit through the exhaust system.

Exhaust Emission Control System

Exhaust emissions are controlled by engine design. An electronic fuel injection (EFI) system controls fuel delivery. The engine and EFI components are set at the factory for optimal performance and are not adjustable.

The emissions label is located on the frame under the seat.

Electromagnetic Interference

This spark ignition system complies with Canadian ICES-002.

This vehicle complies with the EMC requirements European directives 97/24/EC and 89/336/EEC

MAINTENANCE

Periodic Maintenance Chart

Careful periodic maintenance will help keep your vehicle in the safest, most reliable condition. Inspection, adjustment and lubrication of important components are explained in the periodic maintenance chart.

Inspect, clean, lubricate, adjust and replace parts as necessary. When inspection reveals the need for replacement parts, use genuine Polaris parts available from your Polaris dealer.

Record maintenance and service in the Maintenance Log beginning on page 128.

NOTE: Service and adjustments are important for proper vehicle operation. If you're not familiar with safe service and adjustment procedures, have a qualified dealer perform these operations.

Maintenance intervals in the following chart are based upon average riding conditions and an average vehicle speed of approximately ten (10) miles per hour. Vehicles subjected to severe use must be inspected and serviced more frequently.

Severe Use Definition

- Frequent immersion in mud, water or sand
- Racing or race-style high RPM use
- Prolonged low speed, heavy load operation
- Extended idle
- Short trip cold weather operation

Pay special attention to the oil level. A rise in oil level during cold weather can indicate contaminants collecting in the oil sump or crank-case. Change oil immediately if the oil level begins to rise. Monitor the oil level, and if it continues to rise, discontinue use and determine the cause or see your dealer.

Periodic Maintenance Chart

Maintenance Chart Key

▶ Perform these operations more often for vehicles subjected to severe use.

E Emission Control System Service - 4 Cycle (California)

■ Have an authorized Polaris dealer perform these services.

⚠ WARNING
Improperly performing the procedures marked with a ■ could result in component failure and lead to serious injury or death. Have an authorized Polaris dealer perform these services.

MAINTENANCE
Periodic Maintenance Chart

Perform all services at whichever maintenance interval is reached first.

	Item	Maintenance Interval (whichever comes first)			Remarks
		Hours	Calendar	Miles (Km)	
■	Steering	-	Pre-Ride	-	Make adjustments as need ed. See Pre-Ride Checklist on page 41.
▶	Front suspension	-	Pre-Ride	-	
▶	Rear suspension	-	Pre-Ride	-	
	Tires	-	Pre-Ride	-	
▶	Brake fluid level	-	Pre-Ride	-	
▶	Brake pedal travel				
	Brake system	-	Pre-Ride	-	
	Wheels/fasteners	-	Pre-Ride	-	
	Frame fasteners	-	Pre-Ride	-	
▶	Engine oil level	-	Pre-Ride	-	
▶ E	Air filter, pre-filter	-	Daily	-	Inspect; clean often; replace as needed
▶ E	Air box sediment tube	-	Daily	-	Drain deposits when visible
	Coolant (if applicable)	-	Daily	-	Check level daily, change coolant every 2 years
	Headlamp/tail lamp	-	Daily	-	Check operation; apply dielectric grease if replacing
▶ E	Air filter, main element	-	Weekly	-	Inspect; replace as needed
▶ ■	Brake pad wear	10 H	Monthly	-	Inspect periodically
	Battery	20 H	Monthly	-	Check terminals; clean; test
▶	Front Gearcase Oil (if equipped)	25 H	Monthly	-	Inspect level; change yearly
▶	Middle Gearcase Oil (if equipped)	25 H	Monthly	-	Inspect level; change yearly
▶	Rear gearcase oil (if equipped)	25 H	Monthly	-	Inspect level; change yearly
▶	Transmission oil	25 H	Monthly	-	Inspect level; change yearly

▶ Perform these procedures more often for vehicles subjected to severe use.
E Emission Control System Service - 4 Cycle (California)
■ Have an authorized Polaris dealer perform these services.

Periodic Maintenance Chart

	Item	Maintenance Interval (whichever comes first)			Remarks
		Hours	Calendar	Miles (Km)	
▶ E	Engine breather filter (if equipped)	25 H	Monthly	-	Inspect; replace if necessary
▶	Engine oil change (break-in)	25 H	1 M	-	Perform a break-in oil change at one month
	Park brake cable tension	25 H	1 M	-	Check tension, adjust
▶	General lubrication	50 H	3 M	-	Lubricate all fittings, pivots, cables, etc.
	Shift Linkage	50 H	6 M	-	Inspect, lubricate, adjust
■	Steering	50H	6 M	-	Lubricate
▶	Front Suspension	50 H	6 M	-	Lubricate
▶	Rear Suspension	50 H	6 M	-	Lubricate
■ E	Throttle cable/ ETC switch	50 H	6 M	-	Inspect; adjust; lubricate; replace if necessary
E	Throttle body air intake ducts/flange	50 H	6 M	-	Inspect duct for proper sealing/air leaks
	Drive belt	50 H	6 M	-	Inspect; adjust; replace as needed
	Cooling system (if applicable)	50 H	6 M	-	Inspect coolant strength seasonally; pressure test system yearly
	Park brake cable tension	100 H	6 M	-	Check tension, adjust
▶	Engine oil change	100 H	6 M	-	Perform a break-in oil change at one month
▶	Oil filter change	100 H	6 M	-	Replace with oil change

▶ Perform these procedures more often for vehicles subjected to severe use.
E Emission Control System Service - 4 Cycle (California)
■ Have an authorized Polaris dealer perform these services.

MAINTENANCE
Periodic Maintenance Chart

	Item	Maintenance Interval (whichever comes first)			Remarks
		Hours	Calendar	Miles (Km)	
■ E	Fuel system	100 H	12 M	-	Check for leaks at tank cap, lines, fuel valve, filter, pump, throttle body; replace lines every two years
■	Fuel filter	100 H	12 M	-	Replace yearly
▶	Radiator (in applicable)	100 H	12 M	-	Inspect; clean external surfaces
▶	Cooling Hoses	100 H	12 M	-	Inspect for leaks
▶	Engine mounts	100 H	12 M	-	Inspect
	Exhaust muffler/ pipe	100 H	12 M	-	Inspect
▶ E	Spark plug	100 H	12M	-	Inspect; replace as needed
■	Ignition timing	100 H	12 M	-	Inspect
▶	Wiring	100 H	12 M	-	Inspect for wear, routing, security; apply dielectric grease to connectors subjected to water, mud, etc.
■	Clutches (drive and driven)	100 H	12 M	-	Inspect; clean; replace worn parts
■	Front wheel bearings	100 H	12 M	-	Inspect; replace as needed
■	Brake fluid	200 H	24 M	-	Change every two years
	Spark arrestor	300 H	36 M	-	Clean out
	Idle speed	-			Adjust as needed
■	Toe adjustment	-			Inspect periodically; adjust when parts are replaced
■ ▶	Auxiliary brake (if equipped)	-			Inspect daily; adjust as needed
	Headlight aim	-			Adjust as needed

▶ Perform these procedures more often for vehicles subjected to severe use.
E Emission Control System Service - 4 Cycle (California).
■ Have an authorized Polaris dealer perform these services

Lubrication Recommendations

Check and lubricate all components at the intervals outlined in the Periodic Maintenance Chart beginning on page 60, or more often under severe use, such as wet or dusty conditions. Items not listed in the chart should be lubricated at the general lubrication interval.

Item	Lube	Method
Engine Oil	PS-4 PLUS 2W-50	Add to proper level on dipstick. See page 68.
Brake Fluid	DOT 4	Maintain level between fill lines. See page 89.
Main Gearcase Oil (Transmission)	Premium AGL Synthetic Gearcase Lube	See page 71.
Front Gearcase Oil	Premium Demand Drive Hub Fluid	See page 73.
Middle Gearcase Oil (6X6 only)	Premium ATV Angle Drive Fluid	See page 74.
Rear Gearcase Oil	Premium ATV Angle Drive Fluid	See page 75.
Prop Shaft U-joints	Polaris Premium U-Joint Lube	Locate fittings and grease. See page 66.
Front Prop Shaft Yoke	Polaris Premium U-Joint Lube	Locate fittings and grease (3 pumps maximum). See page 66.
Ball Joint	Polaris Premium all Season Grease or grease conforming to NLGI No. 2	Locate fitting (back side of struts), grease with grease gun. See page 66.
Swing Arm Bushings	Polaris Premium all Season Grease or grease conforming to NLGI No. 2	Locate fittings on swing arm and grease with grease gun. See page 66.

MAINTENANCE
Lubrication Recommendations

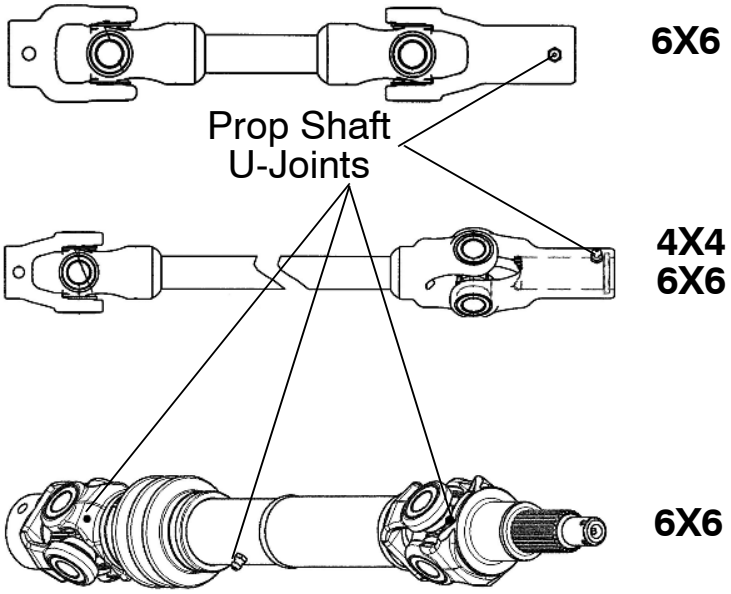

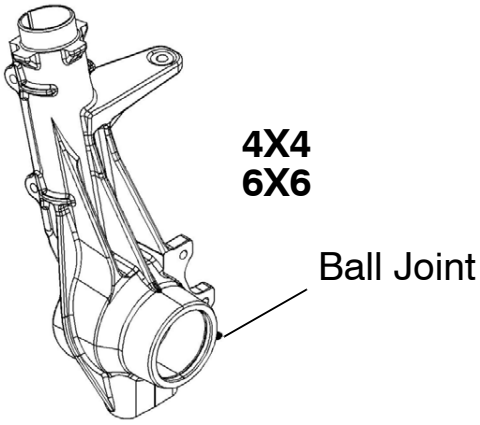

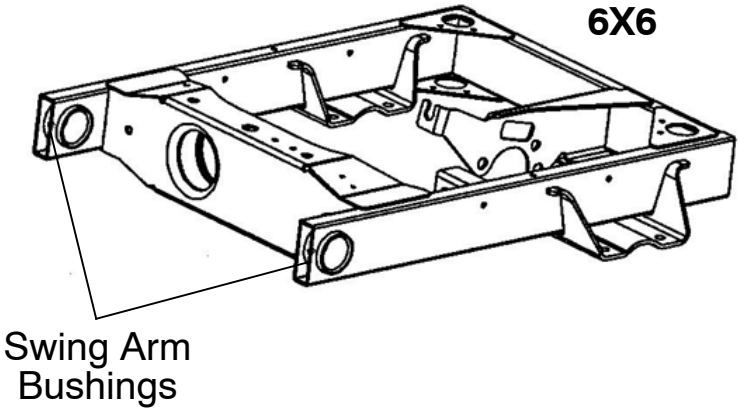

Engine Oil

Always check and change the engine oil at the intervals outlined in the Periodic Maintenance Chart beginning on page 60. Always change the oil filter whenever changing oil.

Polaris recommends the use of Polaris PS-4 *PLUS Performance* Synthetic 2W-50 4-cycle oil or a similar oil. See page 114 for the part numbers of Polaris products.

CAUTION
Mixing brands or using a non-recommended oil may cause serious engine damage. Always use the recommended oil. Never mix oil brands.

⚠ WARNING
Vehicle operation with insufficient, deteriorated, or contaminated engine oil will cause accelerated wear and may result in engine seizure, accident, and injury. Always perform the maintenance procedures as outlined in the Periodic Maintenance Chart.

MAINTENANCE
Engine Oil

Always check and change the oil at the intervals outlined in the Periodic Maintenance Chart beginning on page 60. Always use the recommended engine oil.

Oil Check

The oil dipstick and fill tube is located on the engine.

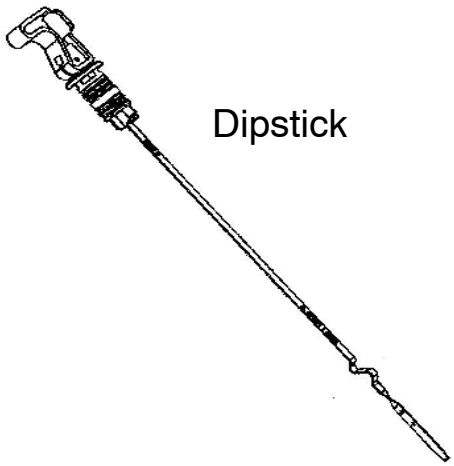

1. Position the vehicle on a level surface.
2. Apply the brakes. Start the engine and allow it to idle for 20-30 seconds. Stop the engine.
3. Lift the lever lock to remove the dipstick. Wipe it dry with a clean cloth.
4. Reinstall the dipstick completely, but do not lock it. The dipstick must be screwed completely in to keep the angle and depth of the stick consistent.
5. Remove the dipstick and check the oil level. Maintain the oil level in the safe range. Do not overfill.

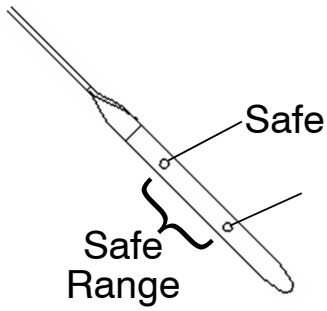

NOTE: Due to the dipstick entry angle into the crankcase, the oil level will read higher on the bottom side of the dipstick. Always read the level on the upper surface of the dipstick.

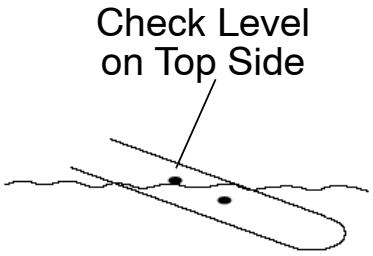

6. After reinstalling the dipstick, be sure to seat the lever lock.

Engine Oil

Oil and Filter Change

CAUTION
Hot oil can cause serious burns to skin. Do not allow hot oil to come into contact with skin.

Always change the oil and filter at the intervals outlined in the Periodic Maintenance Chart beginning on page 60. Always change the oil filter whenever changing oil.

1. Position the vehicle on a level surface.
2. Run the engine for two to three minutes until warm. Stop the engine.
3. Clean the area around the drain plug.
4. Place a drain pan beneath engine crankcase and remove the drain plug.
5. Allow the oil to drain completely.
6. Reinstall the sealing washer on the drain plug.

NOTE: The sealing surfaces on drain plug and crankcase should be clean and free of burrs, nicks or scratches.

7. Reinstall the drain plug. Torque to 20 ft. lbs. (27 Nm).
8. Place shop towels beneath the oil filter. Using an oil filter wrench, turn the filter counter-clockwise to remove it.
9. Using a clean dry cloth, clean the filter sealing surface on the crankcase.
10. Lubricate the o-ring on the new filter with a film of fresh engine oil. Check to make sure the o-ring is in good condition.
11. Install the new filter and turn by hand until the filter gasket contacts the sealing surface, then turn and additional 1/2 turn.

Engine Oil

Oil and Filter Change

12. Remove the dipstick and fill the sump with two quarts (1.9 l) of recommended oil.
13. Shift the transmission to neutral.
14. Engage the park brake.
15. Apply the brakes. Start the engine. Allow it to idle for one to two minutes.
16. Stop the engine. Inspect for leaks.
17. Re-check the oil level on the dipstick and add oil as necessary to bring the level to the upper mark on the dipstick.
18. Dispose of used filter and oil properly.

Gearcases

Gearcase Specification Chart

Gearcase	Lubricant	Capacity	Fill Plug Torque	Drain Plug Torque
Main Gearcase (Transmission)	Premium AGL Synthetic Gearcase Lube	15.2 oz. (450 ml)	14 ft. lbs. (19.4 Nm)	14 ft. lbs. (19.4 Nm)
Front Gearcase	Premium Demand Drive Hub Fluid	5 oz. (150 ml)	8-10 ft. lbs. (11-13.6 Nm	11 ft. lbs. (15 Nm)
Middle Gearcase (6X6)	Premium ATV Angle Drive Fluid	6.75 oz. (200 ml)	14 ft. lbs. (19.4 Nm)	14 ft. lbs. (19.4 Nm)
Rear Gearcase (4X4)	Premium ATV Angle Drive Fluid	18 oz. (532 ml)	40-50 ft. lbs. (54-68 Nm	30-45 in. lbs. (3-5 Nm)
Rear Gearcase (6X6)	Premium ATV Angle Drive Fluid	10 oz. (300 ml)	14 ft. lbs. (19.4 Nm)	14 ft. lbs. (19.4 Nm)

Gearcases

Transmission (Main Gearcase)

Always check and change the transmission oil at the intervals outlined in the Periodic Maintenance Chart beginning on page 60. Maintain the oil level even with the bottom of the fill plug hole.

Refer to the Gearcase Specifications Chart on page 70 for recommended lubricants, capacities and torque specifications. See page 114 for the part numbers of Polaris products.

The fill plug is located at the rear of the vehicle.

Oil Check

1. Position the vehicle on a level surface.
2. Remove the fill plug.
3. Check the oil level.
4. Add the recommended oil as needed.
5. Reinstall the fill plug. Torque to specification.

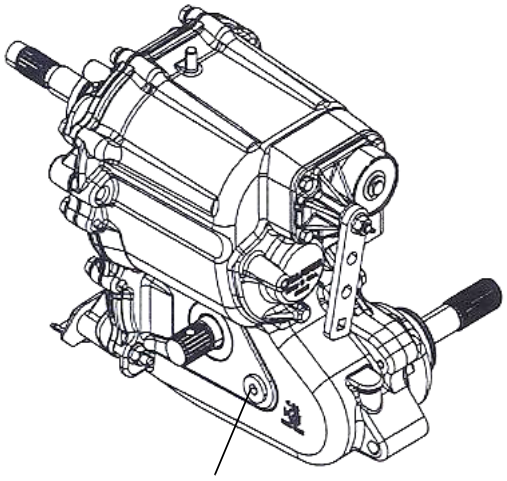

MAINTENANCE

Gearcases

Transmission (Main Gearcase)

Oil Change

The drain plug is located on the bottom of the transmission. Access the drain plug through the drain hole in the skid plate.

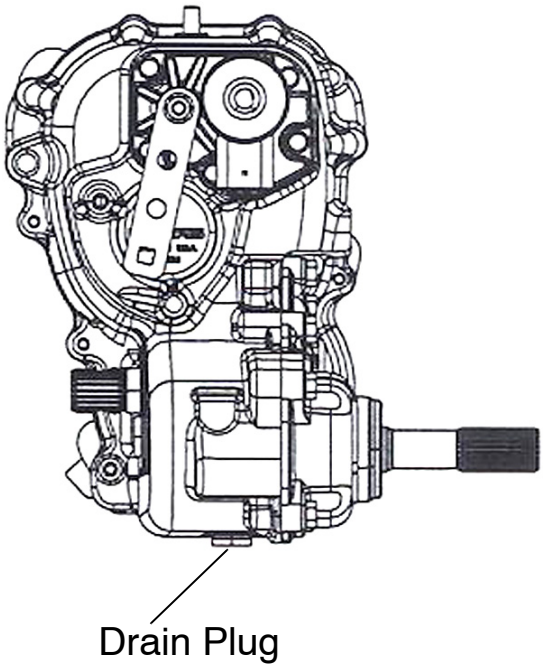

1. Remove the fill plug.
2. Place a drain pan under the drain plug. Remove the drain plug. Drain the oil. Dispose of used oil properly.
3. Wipe the magnetic end of the drain plug clean to remove accumulated metallic filings.
4. After the oil has drained completely, install a new sealing washer.
5. Reinstall the drain plug. Torque to specification.
6. Add the recommended oil as needed. Do not overfill.
7. Reinstall the fill plug. Torque to specification.
8. Check for leaks.

Gearcases

Front Gearcases

Always check and change the front gearcase oil at the intervals outlined in the Periodic Maintenance Chart beginning on page 60. Maintain the oil level even with the bottom thread of the fill plug hole.

Refer to the Gearcase Specifications Chart on page 70 for recommended lubricants, capacities and torque specifications. See page 114 for the part numbers of Polaris products.

The front gearcase fill plug is located on the right side of the front gearcase.

Oil Check

1. Position the vehicle on a level surface.
2. Remove the fill plug. Check the oil level.
3. Add the recommended oil as needed.
4. Reinstall the fill plug. Torque to specification.

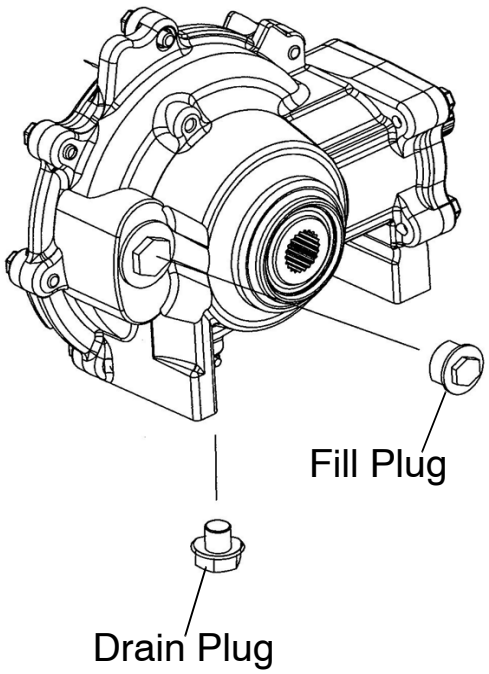

Oil Change

1. Support the vehicle securely with a jackstand.
2. Remove the front tire on the driver's side.
3. Remove the fill plug.
4. Place a drain pan under the drain plug on the bottom right-hand side.
5. Remove the drain plug. Drain the oil. Discard used oil properly.
6. Clean the drain plug. Reinstall the drain plug. Torque to specification.
7. Add the recommended oil.
8. Reinstall the fill plug. Torque to specification.
9. Check for leaks.

MAINTENANCE

Gearcases

Middle Gearcase (6X6)

Always check and change the middle gearcase oil at the intervals outlined in the Periodic Maintenance Chart beginning on page 60. Maintain the oil level even with the bottom thread of the fill plug hole.

Refer to the Gearcase Specifications Chart on page 70 for recommended lubricants, capacities and torque specifications. See page 114 for the part numbers of Polaris products.

The middle gearcase fill plug is located on the side of the gearcase.

Oil Check

1. Position the vehicle on a level surface.
2. Remove the fill plug. Check the oil level.
3. Add the recommended oil as needed.
4. Reinstall the fill plug. Torque to specification.

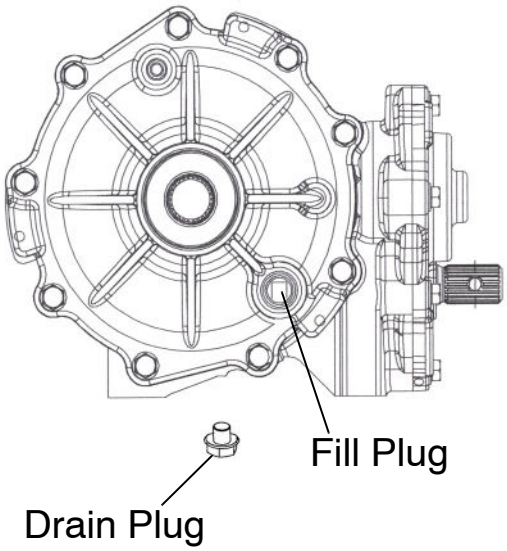

Oil Change

1. Remove the fill plug.
2. Remove the drain plug from the bottom of the gearcase. Drain the oil into a drain pan. Discard used oil properly.
3. Clean and reinstall the drain plug. Torque to specification.
4. Add the recommended fluid.
5. Reinstall the fill plug. Torque to specification.
6. Check for leaks

Gearcases

Rear Gearcase

Always check and change the rear gearcase oil at the intervals outlined in the Periodic Maintenance Chart beginning on page 60.

Refer to the Gearcase Specifications Chart on page 70 for recommended lubricants, capacities and torque specifications. See page 114 for the part numbers of Polaris products.

The rear gearcase fill plug is on the driver's side of the rear gearcase.

Oil Check (4X4)

Maintain the oil level even with the bottom thread of the fill plug hole.

1. Position the vehicle on a level surface.
2. Remove the fill plug. Check the oil level.
3. Add the recommended oil as needed.
4. Reinstall the fill plug. Torque to specification.

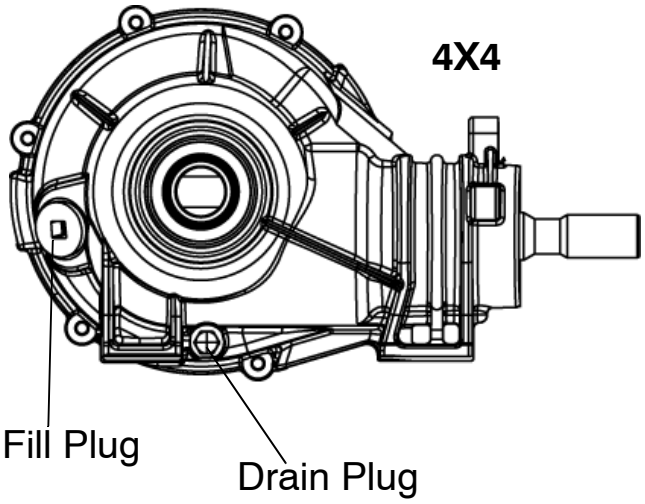

Oil Check (6X6)

The easiest way to check for adequate oil in the 6X6 is to drain and refill the gearcase to capacity (see page 70). Perform the oil change as outlined on page 76.

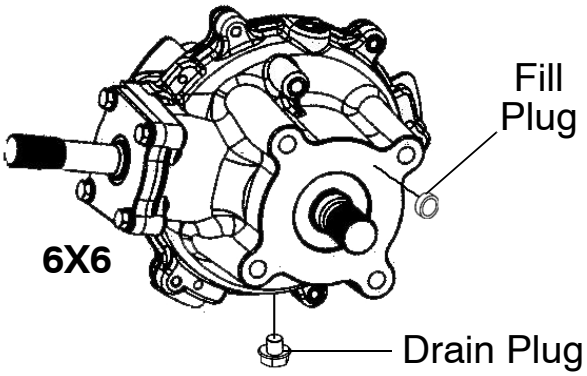

MAINTENANCE
Gearcases
Rear Gearcase
Oil Change

1. Remove the fill plug.
2. Place a drain pan under the drain plug. Remove the drain plug.
3. Drain the oil. Dispose of used oil properly.
4. Clean the drain plug. Reinstall the drain plug. Torque to specification.
5. Add the recommended oil.
6. Reinstall the fill plug. Torque to specification.
7. Check for leaks.

Spark Plugs

CAUTION

Using non-recommended spark plugs can result in serious engine damage. Always use Polaris-recommended spark plugs. Refer to the specifications section beginning on page 110.

Spark Plug Gap/Torque

Model	Electrode Gap	New Plug Torque	Used Plug Torque
RANGER 4X4 EFI	.035" (.9 mm)	18 ft. lbs. (24 Nm)	18 ft. lbs. (24 Nm)
RANGER 6X6 EFI	.035" (.9 mm)	18 ft. lbs. (24 Nm)	18 ft. lbs. (24 Nm)

Spark plug condition is indicative of engine operation. The spark plug firing end condition should be read after the engine is warmed up and the vehicle is driven at higher speeds. Immediately check the spark plug for correct color. See page 78.

⚠ WARNING

A hot exhaust system and engine can cause serious burns. Wear protective gloves when removing a spark plug for inspection.

Spark Plugs

Spark Plug Condition

Normal Plug

The normal insulator tip is gray, tan or light brown. There will be few combustion deposits. The electrodes are not burned or eroded. This indicates the proper type and heat range for the engine and the service.

NOTE: The tip should not be white. A white insulator tip indicates overheating, caused by use of an improper spark plug or incorrect throttle body adjustments.

Wet Fouled Plug

The wet fouled insulator tip is black. A damp oil film covers the firing end. There may be a carbon layer over the entire nose. Generally, the electrodes are not worn. General causes of fouling are excessive oil, use of non-recommended injection oil or incorrect throttle body adjustments.

Spark Plug Removal and Replacement

1. Remove the seat to access the engine compartment.
2. Remove the spark plug cap. Using the spark plug wrench provided in the tool kit, remove the plug by rotating it counterclockwise.
3. Reverse the procedure for spark plug installation. Torque to specification. See page 77.

Cooling System

Operation

The engine coolant level is controlled or maintained by the recovery system. The recovery system components are the overflow bottle, radiator filler neck, radiator pressure cap and connecting hose.

As coolant operating temperature increases, the expanding (heated) excess coolant is forced out of the radiator, past the pressure cap, and into the overflow bottle. As engine coolant temperature decreases, the contracting (cooled) coolant is drawn back up from the tank, past the pressure cap, and into the radiator.

NOTE: Some coolant level drop on new vehicles is normal as the system is purging itself of trapped air. Observe coolant levels and maintain as recommended by adding coolant to the overflow bottle.

Adding or Changing Coolant

To ensure that the coolant maintains its ability to protect the engine, we recommend that the system be completely drained every two years and a fresh mixture of antifreeze and water added. Polaris recommends the use of Polaris Premium 60/40 anti-freeze/coolant or a 50/50 mixture of high quality aluminum compatible anti-freeze/coolant and distilled water. Polaris Premium 60/40 is already premixed and ready to use. Do not dilute with water. See page 114 for the part numbers of Polaris products.

NOTE: Always follow the manufacturer's mixing recommendations for the freeze protection required in your area.

Any time the cooling system has been drained for maintenance or repair, replace the coolant. If the recovery bottle has run dry, the level in the radiator should be inspected. Add coolant as needed.

MAINTENANCE
Cooling System
Radiator and Cooling Fan

Always check and clean the screen and radiator fins at the intervals outlined in the Periodic Maintenance Chart beginning on page 60. Do not obstruct or deflect air flow through the radiator by installing unauthorized accessories in front of the radiator or behind the cooling fan. Interference with the radiator air flow can lead to overheating and consequent engine damage.

CAUTION
Washing the vehicle with a high-pressure hose could damage the radiator fins and impair the radiator's effectiveness. Using a high-pressure system is not recommended.

Coolant Level

Always check and change the coolant at the intervals outlined in the Periodic Maintenance Chart beginning on page 60. Maintain the coolant level between the minimum and maximum marks on the bottle (when the fluid is cool).

The overflow bottle is located in front of the right front wheel.

1. Position the vehicle on a level surface.
2. View the coolant level in the overflow bottle.
3. If the coolant level is below the safe operating range, lift the hood and locate the overflow bottle lid. Remove the lid and use a funnel to add coolant through the filler opening. Reinstall the cap.

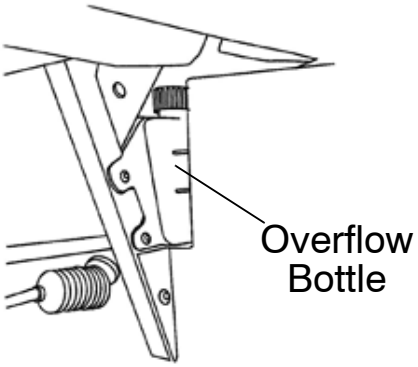

NOTE: If coolant must be added often, or if the overflow bottle runs completely dry, there may be a leak in the system. Have the cooling system inspected by your Polaris dealer.

Cooling System

Radiator Coolant Level

Always check and clean the screen and radiator fins at the intervals outlined in the Periodic Maintenance Chart beginning on page 60. Do not obstruct or deflect air flow through the radiator by installing unauthorized accessories in front of the radiator or behind the cooling fan. Interference with the radiator air flow can lead to overheating and consequentially, engine damage.

⚠ WARNING

Escaping steam can cause severe burns. Never remove the pressure cap while the engine is warm or hot. Always allow the engine to cool before removing the pressure cap.

1. Lift the hood.
2. Slowly remove the radiator cap.
3. View the coolant level through the opening.
4. Use a funnel and slowly add coolant as needed.

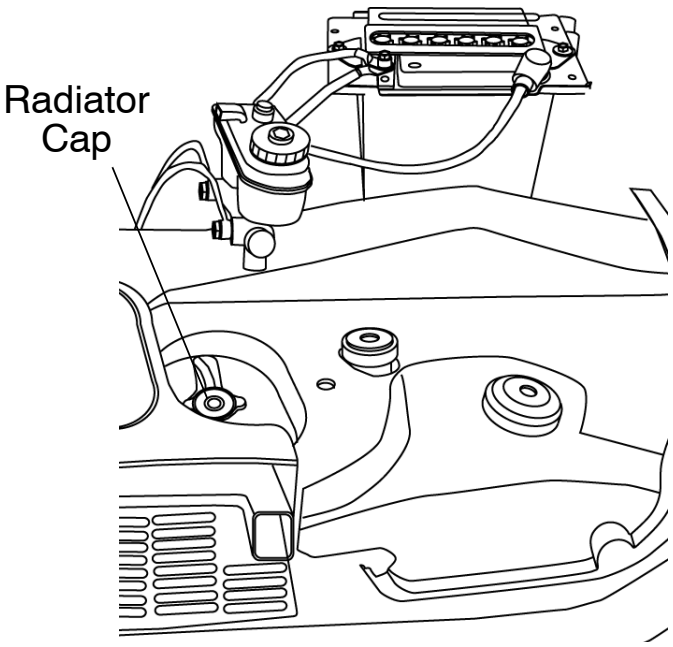

NOTE: This procedure is required only if the cooling system has been drained for maintenance and/or repair. But if the overflow bottle has run dry, the level in the radiator should also be inspected.

NOTE: Use of a non-standard pressure cap will not allow the recovery system to function properly. See your dealer for the correct replacement part.

Polaris Variable Transmission (PVT) System

Belt slip is responsible for creating excessive heat that destroys belts, wears clutch components and causes outer clutch covers to fail. Switch to low range while operating at slower speeds to extend the life of the PVT components (belt, cover, etc.).

When To Use Low Range and High Range

Condition	Range to Use
Operating at speeds less than 7 MPH (11 km/h)	Low
Towing heavy loads	Low
Operating in rough terrain (swamps, mountains, etc.)	Low
Operating at speeds greater than 7 MPH (11 km/h)	High

PVT System

⚠ WARNING

Failure to comply with the instructions in this warning can result in severe injury or death.

Do not modify any component of the PVT system. Doing so may reduce its strength so that a failure may occur at a high speed. The PVT system has been precision balanced. Any modification will cause the system to be out of balance, creating vibration and additional loads on components.

The PVT system rotates at high speeds, creating large amounts of force on clutch components. Extensive engineering and testing has been conducted to ensure the safety of this product. However, as the owner, you have the following responsibilities to make sure this system remains safe:

- Always follow all recommended maintenance procedures. See your dealer as outlined in the owner's manual.
- This PVT system is intended for use on Polaris products only. Do not install it in any other product.
- Always make sure the PVT housing is securely in place during operation.

MAINTENANCE
PVT System
PVT Drying

There may be some instances when water is accidently ingested into the PVT system. Use the following instructions to dry it out before operating.

1. Loosen the bottom screws that secure the clutch cover.
2. Allow the water to drain.
3. Tighten the screws.
4. Apply the brakes. Start the engine.
5. Engage the park brake.
6. Shift the transmission to neutral.
7. Apply varying throttle for 10-15 seconds to expel the moisture and air-dry the belt and clutches. Do not hold the throttle wide open for more than 10 seconds.
8. Allow the engine RPM to settle to idle speed. Apply the service brakes. Release the park brake and shift the transmission to the lowest available range.
9. Test for belt slippage. If the belt slips, repeat the process.
10. Take the vehicle to your dealer for service as soon as possible.

Filter Systems

Air Filter

Always change the air filter at the intervals outlined in the Periodic Maintenance Chart beginning on page 60.

1. Lift the cargo box to access the air box.
2. Remove the air box cover and inspect the gasket. It should adhere tightly to the cover and seal all the way around.
3. Remove the air filter.
4. Do not attempt to clean the main element. Install a new air filter.

NOTE: Apply a small amount of general purpose grease to the sealing edges of the filter before installing.

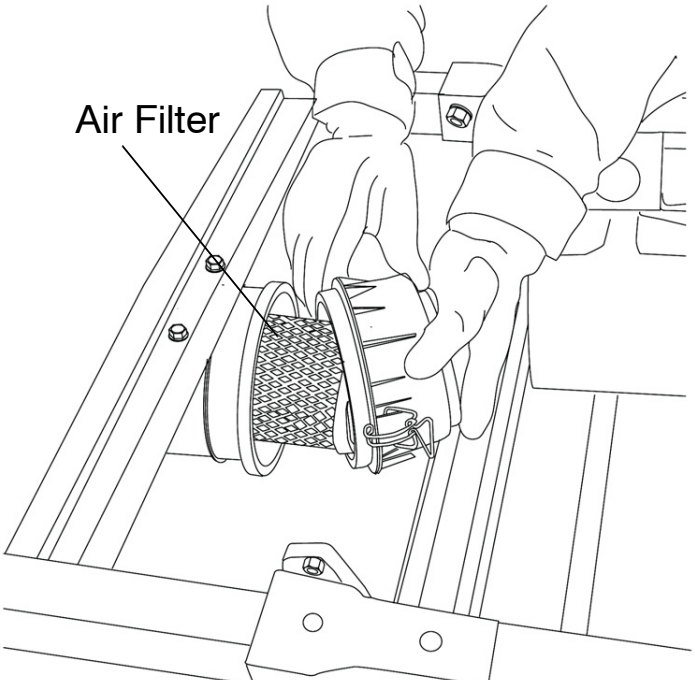

5. Inspect the air box for oil or water deposits. If present, drain them into a suitable container.

NOTE: Service the air filter more frequently if the vehicle is operated in wet conditions or at high throttle openings for extended periods.

Fuel Filter

Your Polaris vehicle is equipped with an in-line fuel filter. Have your dealer replace it after every 100 hours of operation. Do not attempt to clean the fuel filter.

MAINTENANCE
Spark Arrestor

⚠ WARNING

Failure to heed the following warnings while servicing the spark arrestor could result in serious injury or death.

Do not perform service on the spark arrestor while the system is hot. Exhaust system temperatures can reach 1000° F. Allow components to cool sufficiently before proceeding.

Remove any combustible materials from the area.

Wear eye protection and gloves.

Do not stand behind or in front of the vehicle while purging.

Never run the engine in an enclosed area. Exhaust contains poisonous carbon monoxide gas that can cause loss of consciousness or death in a very short time.

Never go under the vehicle while it's inclined.

Use the following procedure to periodically purge accumulated carbon from the exhaust pipe.

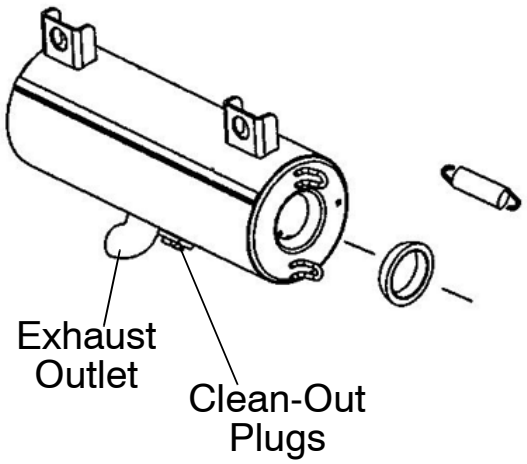

1. Remove the arrestor clean-out plugs located on the bottom of the muffler.
2. Shift the transmission to neutral. Apply the brakes. Start the engine.
3. Purge accumulated carbon from the system by momentarily revving the engine several times.
4. If carbon is expelled, cover or plug the exhaust outlet and rap on the pipe around the clean-out plugs while revving the engine several more times.
5. If particles are still suspected to be in the muffler, elevate the rear of the vehicle one foot higher than the front. Engage the park brake. Block the wheels. Make sure the transmission is in neutral and repeat steps 3 and 4 until no more particles are expelled when the engine is revved.
6. Stop the engine. Allow the arrestor to cool.
7. Reinstall the arrestor plugs and remove the outlet cover or plug.

Throttle System

⚠ WARNING

Failure to check or maintain proper operation of the throttle system can result in an accident and lead to serious injury or death if the throttle pedal sticks during operation.

Never start or operate this vehicle if it has a sticking or improperly operating throttle pedal.

Immediately contact your dealer for service if throttle problems arise.

Always check the pedal for free movement and return before starting the engine and occasionally during operation.

Throttle Freeplay

If the throttle pedal has excessive play due to cable stretch or mis-adjustment, it will cause a delay in throttle response, especially at low engine speed. The throttle may also not open fully. If the throttle pedal has no freeplay, the throttle may be hard to control, and the idle speed may be erratic.

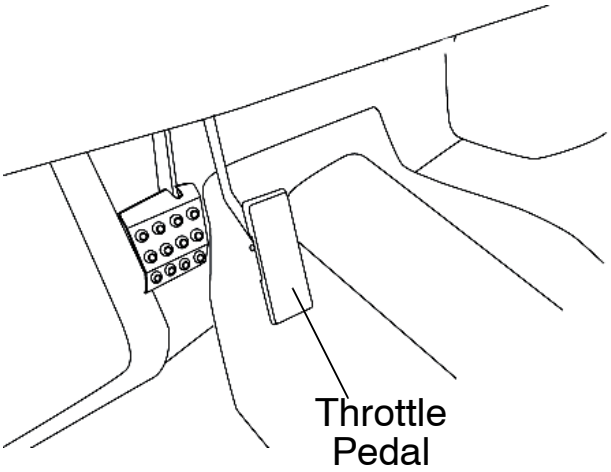

Check the throttle pedal freeplay at the intervals outlined in the Periodic Maintenance Chart beginning on page 60. Adjust the freeplay if necessary.

Throttle Freeplay Inspection

1. Engage the park brake. Shift the transmission to neutral.
2. Apply the brakes. Start the engine. Allow it to warm up thoroughly.
3. Measure the distance the throttle pedal moves before the engine begins to pick up speed. Freeplay should be 1/16 to 1/8 inches (1.6-3.2 mm).

MAINTENANCE
Throttle System
Throttle Body/Idle RPM

Idle RPM is preset by the manufacturer. If the engine idle speed is not satisfactory, please see your Polaris dealer for adjustment.

Throttle Freeplay Adjustment

1. Remove the seat.
2. Locate the throttle cable adjuster.
3. Squeeze the end of the rubber boot and slide it far enough to expose the end of the inline cable adjuster.
4. Loosen the adjuster lock nut.
5. Rotate the boot to turn the adjuster until 1/16" to 1/8" (1.5-3 mm) of freeplay is achieved at the throttle pedal. See page 87.

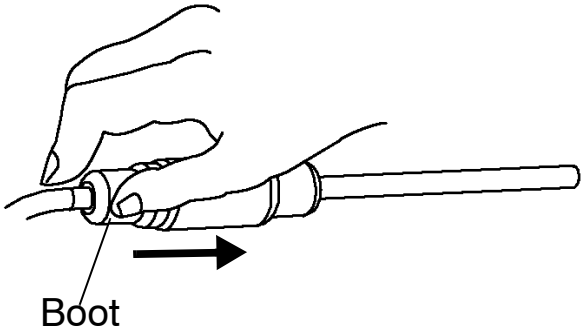

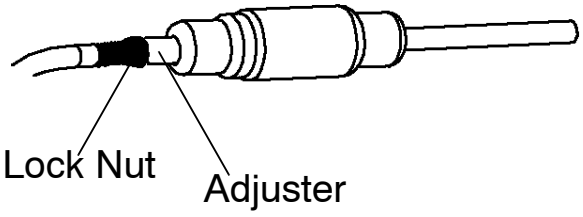

NOTE: While adjusting, lightly flip the throttle pedal up and down.

6. Tighten the lock nut.
7. Squeeze the end of the rubber boot and slide it over the cable adjuster to its original position.

Brakes

The front and rear brakes are hydraulic disc type brakes activated by the brake pedal. See page 36.

Brake Fluid

Inspect the brake system routinely. Inspect the level of the brake fluid before each operation.

Change the brake fluid every two years and any time the fluid becomes contaminated, the fluid level is below the minimum, or if the type and brand of the fluid in the reservoir are unknown.

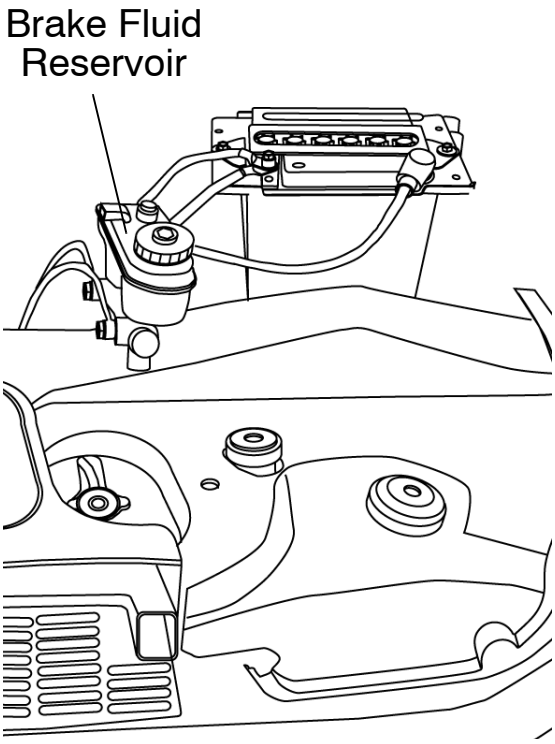

1. Position the vehicle on a level surface.
2. View the brake fluid level at the reservoir under the hood. The level should be between the upper (MAX) and lower (MIN) level lines.
3. If the fluid level is lower than the upper level line, add brake fluid to the upper (MAX) line.
4. Apply the brake forcefully for a few seconds and check for fluid leakage around the fittings.

⚠ WARNING

After opening a bottle of brake fluid, always discard any unused portion. Never store or use a partial bottle. Brake fluid is hygroscopic, meaning it rapidly absorbs moisture from the air. The moisture causes the boiling temperature of the brake fluid to drop, which can lead to early brake fade and the possibility of accident or severe injury.

MAINTENANCE

Brakes

Brake Inspection

1. Check the brake system for fluid leaks.
2. Check the brake pedal for excessive travel or a spongy feel.
3. Check the friction pads for wear, damage and looseness.
4. Inspect the brake disc spline and pad wear surface for excessive wear.
5. Change pads when worn to 3/64" (1 mm).

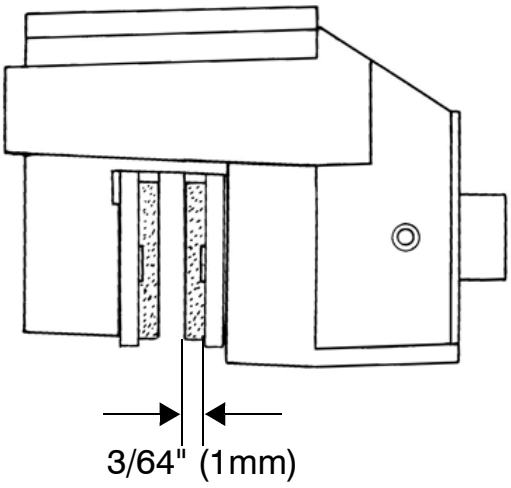

Park Brake Inspection

1. Apply the brakes.
2. Pull the park brake lever downward as far as possible.
3. Check the vehicle for movement. The vehicle should not roll while parked. If the vehicle moves, adjust the park brake.

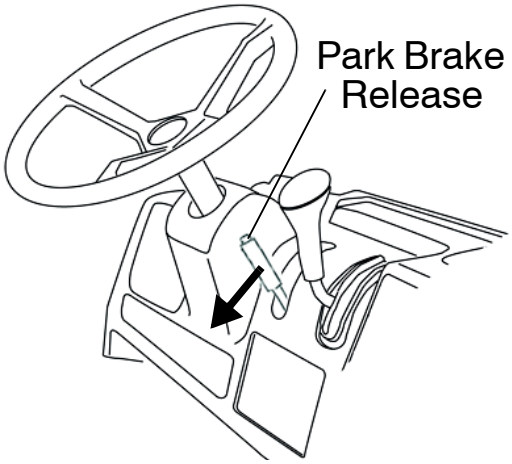

Park Brake Adjustment

Inspect and adjust park brake cable tension after the first 25 hours of operation and every 100 hours thereafter to ensure proper cable tension. Loss of tension in the park brake cable may cause illumination of the park brake light and activation of the limiting feature. If this occurs, move the park brake lever to the forward-most position, then inspect and adjust park brake cable tension.

NOTE: If performing this service is difficult due to conditions or location, open the hood and temporarily disconnect the park brake connector. This will inactivate the limiting function. Reconnect the connector as soon as possible, and adjust the park brake cable to proper tension.

1. Position the vehicle on a level surface.
2. Shift the transmission to neutral.
3. Loosen or tighten the nuts on the lever end of the park brake cable as needed.

Steering Wheel Inspection

Check the steering wheel for specified freeplay and smooth operation at the intervals outlined in the Periodic Maintenance Chart beginning on page 60.

1. Position the vehicle on level ground.
2. Lightly turn the steering wheel left and right.
3. There should be 0.8"-1.0" (20-25 mm) of freeplay.
4. If there is excessive freeplay or strange noises, or the steering feels rough or "catchy," have the steering system inspected by an authorized Polaris dealer.

Suspension Adjustment (4X4)

The 4X4 rear suspension may be adjusted to provide a stiffer suspension if necessary.

1. Remove the top shock mounting bolts from the inside mounting holes.
2. Reposition the shocks to the outside mounting holes.
3. Reinstall the shock mounting bolts. Torque to 30 ft. lbs. (40 Nm).

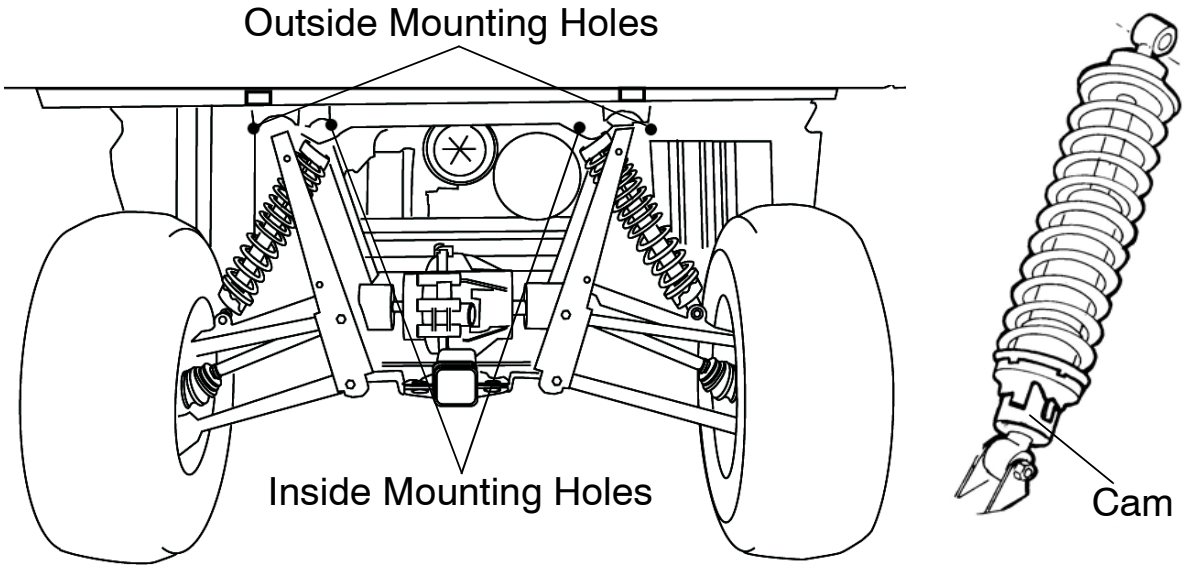

Rear Spring Adjustment

The rear shock absorber springs are adjusted by rotating the adjustment cam either clockwise or counterclockwise to increase or decrease spring tension.

Seat Belts

Inspect all three seat belts for proper operation before each use of the vehicle.

1. Push the latch plate into the buckle until it clicks. The latch plate must slide smoothly into the buckle. A click indicates that it's securely latched.
2. Push the red button in the middle of the buckle to make sure it releases freely.
3. Check the belt webbing for wear, cuts or damage. If any irregularities are found, have the seat belt system checked and/or replaced by an authorized Polaris dealer.

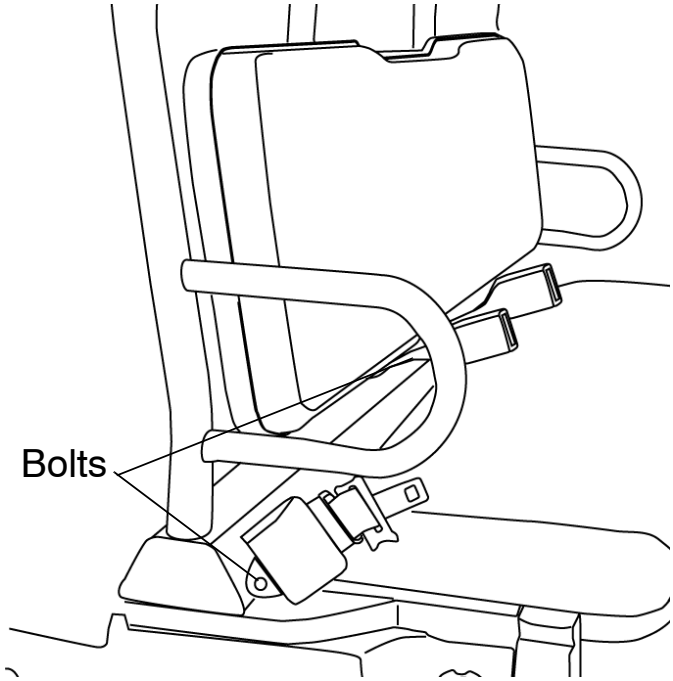

The *RANGER* seat belt is adjustable and should be adjusted for both the operator and passengers before driving. Although having the belt at 30° is typical for many people, it will not accommodate all body sizes and shapes. Make sure the seat belt is adjusted to the lowest possible lap position before riding.

1. To adjust, loosen the bolts.
2. Reposition both the buckle and retractor. Tighten the bolts.

NOTE: The center belt does not self adjust. Before riding, pull on the strap to secure the belt on the lap of the center passenger.

⚠ WARNING
Failure to follow the age recommendations for this vehicle could result in serious injury or death. No one under the age of 16 may operate this vehicle. No one under the age of 5 may ride as a passenger in this vehicle.

Tires

⚠ WARNING

Operating your vehicle with worn tires will increase the possibility of skidding, loss of control and an accident, which could result in serious injury or death. Always replace tires when the tread depth measures 1/8" (3 mm) or less.

Improper tire inflation or the use of non-standard size or type of tires may adversely affect vehicle handling, which could result in vehicle damage or personal injury. Always maintain proper tire pressure. When replacing tires, always use original equipment size and type.

Tire Tread Depth

Always replace tires when tread depth is worn to 1/8" (3 mm) or less.

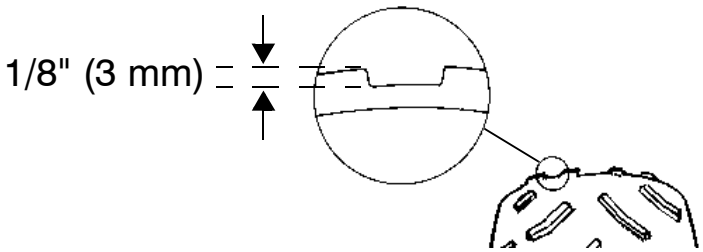

Axle and Wheel Nut Torque Specifications

Inspect the following items occasionally for tightness, and if they've been loosened for maintenance service.

Nut Type	Location	Nut Torque
Lug Nut 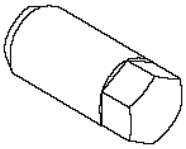	Front and Rear	90 ft. lbs. (122 Nm)
2-Piece Flange Nut	Front and Rear	35 ft. lbs. (47 Nm)
Spindle Nut	Front	70 ft. lbs. (95 Nm)
Hub Retaining Nuts	Center and Rear	110 ft. lbs. (150 Nm)

NOTE: Do not lubricate the stud or the lug nut.

Tires

⚠ WARNING

Improperly installed wheels can adversely affect tire wear and vehicle handling, which can result in serious injury or death. Always ensure that all nuts are torqued to specification. Do not service axle nuts that have a cotter pin installed. See your Polaris dealer.

Wheel Removal

1. Stop the engine. Place the transmission in gear. Engage the park brake.
2. Loosen the wheel nuts slightly.
3. Elevate the side of the vehicle by placing a suitable stand under the frame.
4. Remove the wheel nuts and washers. Remove the wheel.

Wheel Installation

1. Place the transmission in gear.
2. Engage the park brake.
3. Place the wheel in the correct position on the wheel hub. Be sure the valve stem is toward the outside and rotation arrows on the tire point toward forward rotation.

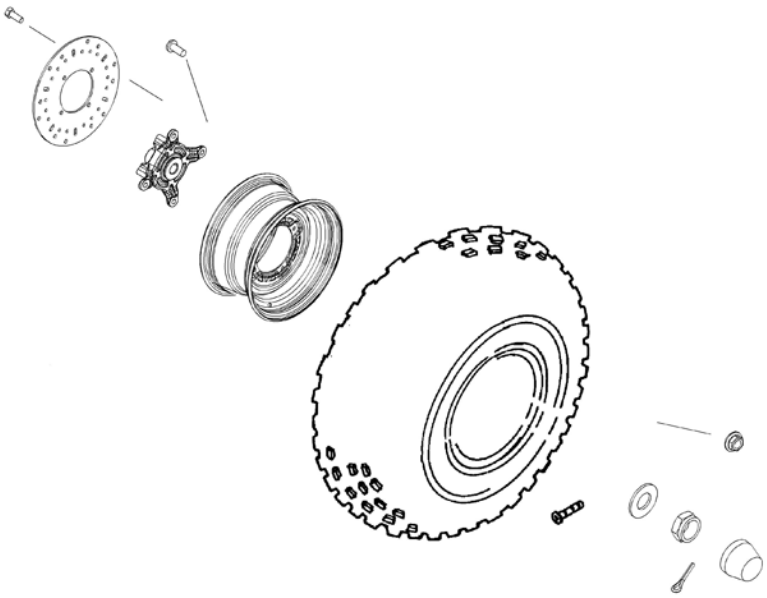

4. Attach the wheel nuts and washers and finger tighten.
5. Carefully lower the vehicle to the ground.
6. Torque the wheel nuts to specification. See page 93.

Lights

When servicing a halogen lamp, don't touch the lamp with bare fingers. Oil from your skin leaves a residue, causing a hot spot that will shorten the life of the lamp.

⚠ WARNING

Poor lighting while driving can result in severe injury or death. Headlight and taillight lenses become dirty during normal operation. Wash the headlights frequently to maintain lighting quality.

Hot components can cause serious burns to skin. Do not service the headlamps until they've cooled sufficiently.

Headlight Lamp Replacement

1. Open the hood.
2. Unplug the headlamp from the wiring harness. Be sure to pull on the connector, not on the wiring.
3. Turn the lamp counter-clockwise to remove it.
4. Install the new lamp.

NOTE: Make sure the tab on the lamp locates properly in the housing.

5. Reinstall the harness assembly into the headlight assembly.

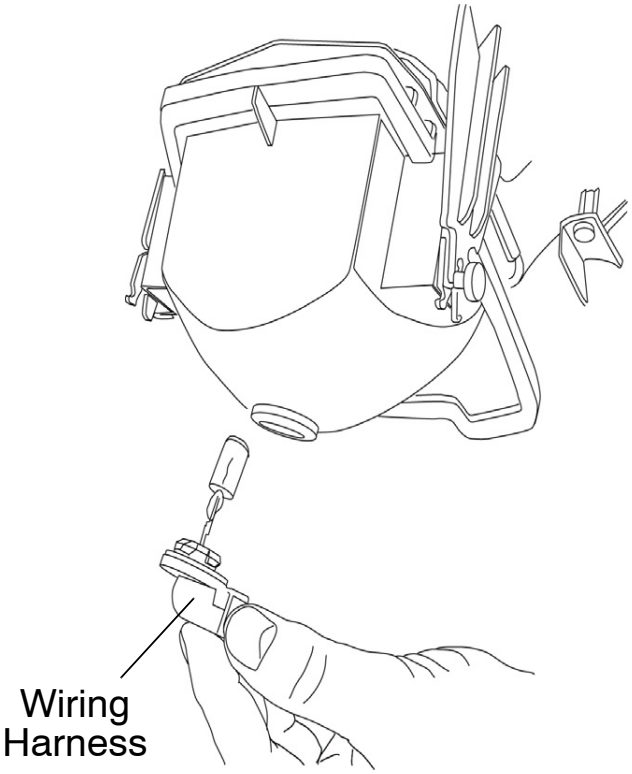

MAINTENANCE

Lights

Headlight Beam Adjustment

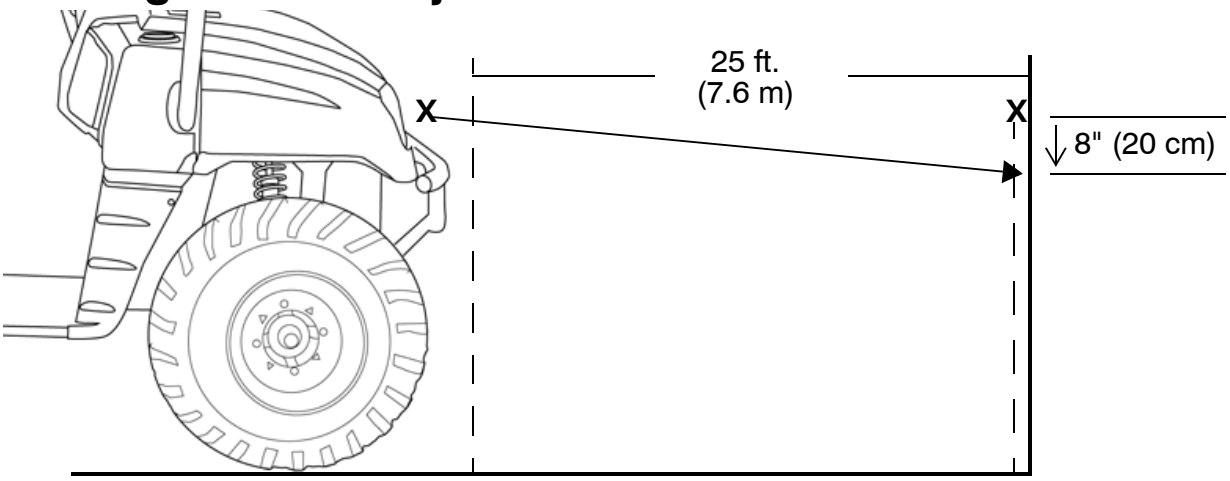

1. Place the vehicle on a level surface with the headlight approximately 25 ft. (7.6 m) from a wall.
2. Measure the distance from the floor to the center of the headlight and make a mark on the wall at the same height.
3. Apply the brakes. Start the engine. Turn on the headlights.
4. Observe the headlight aim. The most intense part of the headlight beam should be aimed 8" (20 cm) below the mark placed on the wall in step 2.

NOTE: Include the weight of a rider on the seat while performing this step.

5. If the headlight needs adjustment, open the hood.

NOTE: The lights are part of the hood assembly.

6. Turn the adjustment screw to adjust the beam.
7. Close the hood. Repeat steps 4-6 until the beam is properly adjusted.

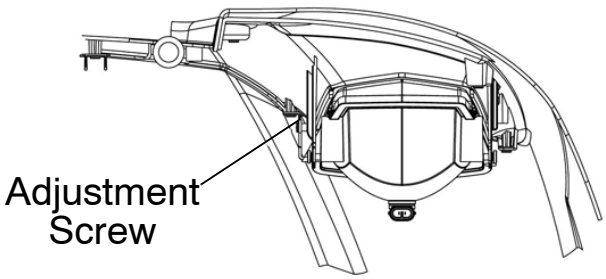

View of driver's headlight with hood lifted.

Brake Lights

When the brake pedal is depressed, the console brake light comes on. Check the brake light before each ride.

1. Turn the ignition switch to the ON position.
2. Depress the brake pedal. The brake light should come on after about 10 mm (0.4 in.) of pedal travel. If the light doesn't come on, check the bulb.

Vehicle Immersion

CAUTION
If your vehicle becomes immersed, major engine damage can result if the machine is not thoroughly inspected. Take the vehicle to your dealer before starting the engine.

If it's impossible to take your *RANGER* to a dealer before starting it, follow the steps outlined below.

1. Move the vehicle to dry land or at the very least, to water below the footrests.
2. Dry any water present in the air box.
3. Filter replacement is required if water is present.
4. Thoroughly dry the air pre-cleaner located under the hood.
5. Remove the spark plugs.
6. Turn the engine over several times using the electric start.
7. Dry the spark plugs and reinstall, or replace with new plugs.

NOTE: Attempt to start the engine. If necessary, repeat the drying procedure.

8. Take the vehicle to your dealer for service as soon as possible, whether you succeed in starting it or not.

NOTE: If water has been ingested into the PVT follow the procedure on page 84 for drying.

MAINTENANCE

Battery

Your vehicle may have either a sealed battery, which requires little maintenance, or a conventional battery. A sealed battery can be identified by its flat covers on the top of the battery. A conventional battery has six filler caps on the top of the battery.

Conventional Battery

Always keep battery terminals and connections free of corrosion. If cleaning is necessary, remove the corrosion with a stiff wire brush. Wash with a solution of one tablespoon baking soda and one cup water. Rinse well with tap water and dry off with clean shop towels. Coat the terminals with dielectric grease or petroleum jelly. Be careful not to allow cleaning solution or tap water into the battery.

⚠ WARNING

Battery electrolyte is poisonous. It contains sulfuric acid. Serious burns can result from contact with skin, eyes or clothing.

Antidote:

External: Flush with water.

Internal: Drink large quantities of water or milk. Follow with milk of magnesia, beaten egg, or vegetable oil. Call physician immediately.

Eyes: Flush with water for 15 minutes and get prompt medical attention.

Batteries produce explosive gases. Keep sparks, flame, cigarettes, etc. away. Ventilate when charging or using in an enclosed space. Always shield eyes when working near batteries. KEEP OUT OF REACH OF CHILDREN.

Battery

⚠ WARNING

Improperly connecting or disconnecting battery cables can result in an explosion and cause serious injury or death. When removing the battery, always disconnect the negative (black) cable first. When reinstalling the battery, always connect the negative (black) cable last.

Battery Removal

1. Open the hood.
2. On conventional batteries, remove the battery vent tube.
3. Disconnect the black (negative) battery cable first.
4. Disconnect the red (positive) battery cable last.
5. Lift the battery out of the vehicle. Be careful not to tip a conventional battery sideways, which could spill electrolyte.

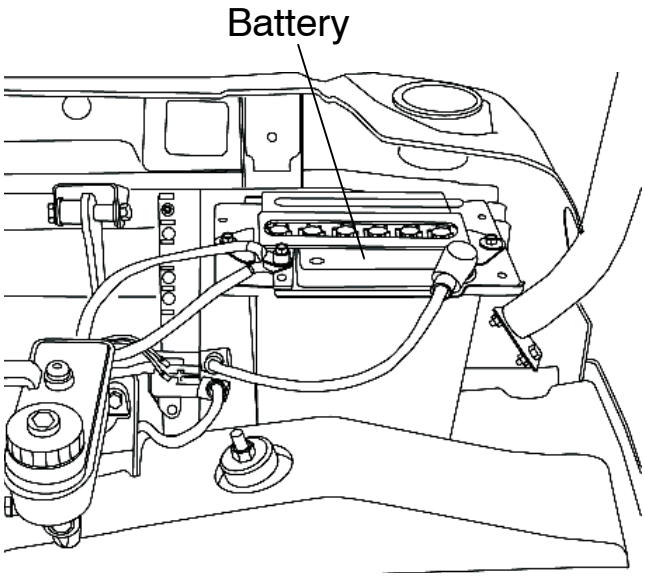

CAUTION

If electrolyte spills, immediately wash it off with a solution of one tablespoon baking soda and one cup water to prevent damage to the vehicle.

Battery

Battery Installation

Using a new battery that has not been fully charged can damage the battery and result in a shorter life. It can also hinder vehicle performance. Follow the battery charging instructions on page 102 before installing the battery.

1. Ensure that the battery is fully charged.
2. Place the battery in the battery holder.
3. With conventional batteries, install the battery vent tube (sealed batteries do not have a vent tube).

NOTE: The vent tube must be free of obstructions and securely installed. Route the tube away from the frame and vehicle body to prevent contact with electrolyte.

⚠ WARNING

Battery gases could accumulate in an improperly installed vent tube and cause an explosion, resulting in serious injury or death. Always ensure that the vent tube is free of obstructions and is securely installed as recommended.

4. On conventional batteries, coat the terminals with dielectric grease or petroleum jelly.
5. Connect and tighten the red (positive) cable first.
6. Connect and tighten the black (negative) cable last.
7. Verify that cables are properly routed.

Battery

Battery Storage

Whenever the vehicle is not used for a period of three months or more, remove the battery from the vehicle, ensure that it's fully charged, and store it out of the sun in a cool, dry place. Check battery voltage each month during storage and recharge as needed to maintain a full charge. See page 102.

NOTE: Battery charge can be maintained by using a Polaris Battery Tender charger or by charging about once a month to make up for normal self-discharge. Battery Tender can be left connected during the storage period, and will automatically charge the battery if the voltage drops below a pre-determined point. See page 114 for the part numbers of Polaris products.

Battery Fluid (Conventional Battery)

A poorly maintained battery will deteriorate rapidly. Check the battery fluid level often. Maintain the fluid level between the upper and lower level marks.

Add only distilled water. Tap water contains minerals that are harmful to a battery.

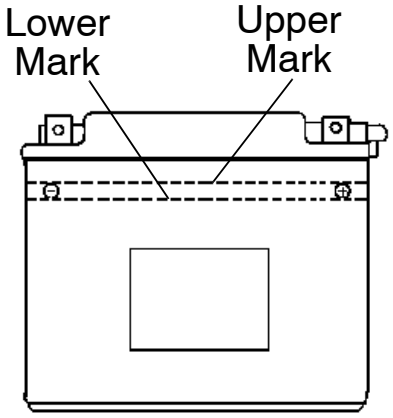

Battery

Battery Charging (Conventional Battery)

1. Remove the battery from the vehicle to prevent damage from leaking or spilled electrolyte during charging. See page 99.
2. Charge the battery with a charging output no larger than 1/10 of the battery's amp/hr rating. Charge as needed to raise the specific gravity to 1.270 or greater.
3. Reinstall the battery. See page 100. Make sure the positive terminal is toward the front of the vehicle.

Battery Charging (Sealed Battery)

The following battery charging instructions apply only to the installation of a sealed battery. Read all instructions before proceeding with the installation of this battery.

The sealed battery is already filled with electrolyte and has been sealed and *fully charged* at the factory. *Never* pry the sealing strip off or add any other fluid to this battery.

The single most important thing about maintaining a sealed battery is to keep it fully charged. Since the battery is sealed and the sealing strip cannot be removed, you must use a voltmeter or multimeter to measure DC voltage.

⚠ WARNING

An overheated battery may explode, causing severe injury or death. Always watch charging times carefully. Stop charging if the battery becomes very warm to the touch. Allow it to cool before resuming charging.

For a refresh charge, follow all instructions carefully.

1. Check the battery voltage with a voltmeter or multimeter. A fully charged battery will register 12.8 V or higher.
2. If the voltage is less than 12.8 volts, recharge the battery at 1.2 amps or less until battery voltage is 12.8 or greater.

NOTE: When using an automatic charger, refer to the charger manufacturer's instructions for recharging. When using a constant current charger, use the guidelines on the next page for recharging.

Battery

Battery Charging (Sealed Battery)

NOTE: Always verify battery condition before and 1-2 hours after the end of charging.

State of Charge	Voltage	Action	Charge Time (Using constant current charger @ standard amps specified on top of battery)
100%	12.8-13.0 volts	None, check at 3 mos. from date of manufacture	None required
75%-100%	12.5-12.8 volts	May need slight charge, if no charge given, check in 3 months	3-6 hours
50%-75%	12.0-12.5 volts	Needs charge	5-11 hours
25%-50%	11.5-12.0 volts	Needs charge	At least 13 hours, verify state of charge
0%-25%	11.5 volts or less	Needs charge with desulfating charger	At least 20 hours

MAINTENANCE

Cleaning and Storage

Washing the Vehicle

Keeping your Polaris vehicle clean will not only improve its appearance but it can also extend the life of various components.

CAUTION
High water pressure may damage components. Polaris recommends washing the vehicle by hand or with a garden hose, using mild soap. Certain products, including insect repellents and chemicals, will damage plastic surfaces. Do not allow these types of products to contact the vehicle.

The best and safest way to clean your Polaris vehicle is with a garden hose and a pail of mild soap and water.

1. Use a professional-type washing cloth, cleaning the upper body first and the lower parts last.
2. Rinse with clean water frequently.
3. Dry surfaces with a chamois to prevent water spots.

Washing Tips

- Avoid the use of harsh cleaners, which can scratch the finish.
- Do not use a power washer to clean the vehicle.
- Do not use medium to heavy duty compounds on the finish.
- Always use clean cloths and pads for cleaning and polishing. Old or reused cloths and pads may contain dirt particles that will scratch the finish.

Cleaning and Storage

Washing the Vehicle

If a high pressure water system is used for cleaning (not recommended), exercise extreme caution. The water may damage components and could remove paint and decals. Avoid directing the water stream at the following items:

- Wheel bearings
- Radiator
- Transmission seals
- Brakes
- Cab and body panels
- Labels and decals
- Electrical components and wiring

NOTE: If warning and safety labels are damaged, contact your Polaris dealer for free replacement.

Grease all zerk fittings immediately after washing. Allow the engine to run for a while to evaporate any water that may have entered the engine or exhaust system.

Polishing the Vehicle

Polaris recommends the use of common household aerosol furniture polish for polishing the finish on your Polaris vehicle. Follow the instructions on the container.

Polishing Tips

- Avoid the use of automotive products, some of which can scratch the finish of your vehicle.
- Always use clean cloths and pads for cleaning and polishing. Old or reused cloths and pads may contain dirt particles that will scratch the finish.

MAINTENANCE

Cleaning and Storage

Chrome Wheel Care (if equipped)

Proper maintenance will protect chrome wheels from corrosion, preserve wheel life and ensure a “like new” appearance for many years.

NOTE: Chrome wheels exposed to road salt (or salt in the air in coastal areas) are more susceptible to corrosion if not properly cleaned. Clean chrome wheels more often if they're exposed to salt or other corrosive elements.

1. Wash chrome wheels frequently. Use a mild detergent. Never use abrasive cleaners on plated or painted surfaces.
2. Rinse well with clear water. Soap, detergents, salt, dirt, mud and other elements can cause corrosion.
3. Polish the clean chrome wheels periodically. Use an automotive grade chrome polish.
4. Routinely and liberally apply a weather resistant wax to each polished chrome wheel. Choose a product suitable for chrome finishes. Read and follow the product labels and instructions.

Removing Corrosion

If light rust is found on the chrome finish, use steel wool (#0000-OTT grade) to remove it. Gently rub the affected areas with the steel wool until the corrosion has been removed. Clean and polish the wheel as outlined above.

Cleaning and Storage

Storage Tips

CAUTION
Starting the engine during the storage period will disturb the protective film created by fogging and damage could occur. Never start the engine during the storage period.

Clean the Exterior

Make any necessary repairs and clean the vehicle as recommended. See page 104.

Stabilize the Fuel

1. Fill the fuel tank.
2. Add Polaris Carbon Clean Fuel Treatment or Polaris Fuel Stabilizer. Follow the instructions on the container for the recommended amount.

NOTE: Carbon Clean removes water from fuel systems, stabilizes fuel and removes carbon deposits from pistons, rings, valves and exhaust systems.

3. Allow the engine to run for 15-20 minutes to allow the stabilizer to disperse through the entire fuel delivery system.

Oil and Filter

Change the oil and filter. See page 69.

Air Filter / Air Box

Inspect and clean or replace the pre-cleaner and air filter. See page 85. Clean the air box. Drain the sediment tube.

Fluid Levels

Inspect the fluid levels. Add or change fluids as recommended in the Periodic Maintenance Chart beginning on page 60.

- Front and rear gearcase fluid
- Transmission fluid
- Brake fluid (change every two years and any time the fluid looks dark or contaminated)
- Coolant (test strength/fill)

Inspect and Lubricate

Inspect all cables and lubricate all areas of the vehicle as recommended in the Periodic Maintenance Chart beginning on page 60.

Cleaning and Storage

Storage Tips

Fog the Engine

1. Treat the fuel system with Polaris Carbon Clean. Follow the instructions on the container. Start the engine. Allow it to idle for several minutes so the Carbon Clean reaches the injectors. Stop the engine.
2. Remove the spark plugs and add 2-3 tablespoons of engine oil. To access the plug holes, use a section of clear 1/4" hose and a small plastic squeeze bottle filled with the pre-measured amount of oil.

NOTE: Do this carefully! If you miss the plug holes, oil will drain from the spark plug cavities into the hole at the front of the cylinder head, and appear to be an oil leak.

3. Reinstall the spark plugs. Torque to specification. See page 78.
4. Apply dielectric grease to the inside of each spark plug cap and reinstall the caps onto the plugs.
5. Turn the engine over several times. Oil will be forced in and around the piston rings and ring lands, coating the cylinder with a protective film of fresh oil.
6. If Polaris fuel system additive is not used, fuel tank, fuel lines, and injectors should be completely drained of gasoline.

Battery Maintenance

See pages 101-103 for storage and charging procedures.

Storage Area/Covers

Be sure the storage area is well ventilated. Cover the vehicle with a genuine Polaris cover.

NOTE: Do not use plastic or coated materials. They do not allow enough ventilation to prevent condensation, and may promote corrosion and oxidation.

Removal from Storage

1. Check the battery electrolyte level and charge the battery if necessary. Install it in the vehicle. Make sure the battery vent hose is routed properly and that it's not pinched or restricted in any way.
2. Make sure the spark plug is tight.
3. Fill the fuel tank with fuel.
4. Check all the points listed in the Daily Pre-Ride Inspection section on page 41.

NOTE: Tightness of the bolts, nuts and other fasteners should be checked by an authorized Polaris dealer.

5. Lubricate at the intervals outlined in the Periodic Maintenance Chart beginning on page 60.

⚠ WARNING
Engine exhaust contains poisonous carbon monoxide and can cause loss of consciousness or death. Never run an engine in an enclosed area.

Transporting the *RANGER*

Follow these procedures when transporting the vehicle.

1. Stop the engine.
2. Remove the key to prevent loss during transporting.
3. Place the transmission in gear.
4. Engage the park brake.
5. Secure the fuel cap, oil cap and seat.
6. Always tie the frame of the *RANGER* to the transporting unit securely with suitable straps or rope. Do not attach tie straps to the front A-arm bolt pockets.

SPECIFICATIONS

RANGER 4X4 700 EFI	
Maximum Weight Capacity	1500 lbs. (682 kg) (includes weight of operator, passenger, cargo, accessories)
Fuel Capacity	8.8 gal. (33.3 l)
Engine Oil Capacity	2 qts. (2.1 l)
Coolant Capacity	3.25 qts. (3 l)
Towing Capacity	2000 lbs. (907 kg)
Hitch Tongue Capacity	150 lbs. (68 kg)
Max. Cargo Box Load	1000 lbs. (454 kg)
Overall Length	113 in. (282 cm)
Overall Width (box)	60 in. (152.4 cm)
Overall Width (tires)	58 in. (147.3 cm)
Overall Height	75 in. (190.5 cm)
Wheelbase	76 in. (193 cm)
Cargo Box (L x W x H)	58 x 42 x 10 in. (147 x 106.7 x 25.4 cm)
Ground Clearance	11.5 in. (29 cm)
Min. Turning Radius	132 in. (335.3 cm)
Engine	4 valve 4 stroke twin cylinder with counter balance
Displacement	683 cc
Bore x Stroke	80 x 68
Alternator Output	500 W @ 3000 RPM
Compression Ratio	9.40:1
Starting System	Electric
Fuel System	Electronic Fuel Injection
Ignition System	ECU
Spark Plug / Gap	RC7YC /.035 in. (0.9 mm)
Front Suspension	MacPherson strut w/8 in. (20.3 cm) of travel
Rear Suspension	Independent w/9.0 in. (22.9 cm) of travel

RANGER 4X4 700 EFI	
Lubrication System	Pressurized Wet Sump
Engine Oil	2W-50
Driving System Type	PVT, 4-wheel independent shaft, lockable differential
Shift Type	Single Lever (H/L/N/R)
Gear Reduction - Low	8.71:1
Gear Reduction - Reverse	5.94:1
Gear Reduction - High	3.14:1
Drive Ratio - Front:	3.83:1
Drive Ratio - Final	3.70:1
Tire Size - Front	26 x 8 - 12
Tire Size - Rear	26 x 11 - 12
Tire Pressure - Front	8-12 psi
Tire Pressure - Rear	8-12 psi
Brakes, Front/Rear	Foot Activated, 4 wheel hydraulic disc
Brake, Park	Hand activated, mechanical
Hood Headlight	2 single beam, 50W, quartz/halogen
Taillights	2 single beam, 5W
Brake Light	2 single beam, 5W
Indicator Light	1.0 W

NOTE: See your Polaris dealer for clutching specifications.

SPECIFICATIONS

RANGER 6X6 700 EFI	
Maximum Weight Capacity	1750 lbs. (795 kg) (includes weight of operator, passenger, cargo, accessories)
Fuel Capacity	8.8 gal. (33.3 l)
Engine Oil Capacity	2 qts. (2.1 l)
Coolant Capacity	3.25 qts. (3 l)
Towing Capacity	2000 lbs. (907 kg)
Max. Cargo Box Load	1250 lbs. (567 kg)
Overall Length	120 in. (304.8 cm)
Overall Width (box)	60 in. (152.4 cm)
Overall Width (tires)	58 in. (147.3 cm)
Overall Height	75 in. (190.5 cm)
Wheelbase	90 in. (228.6 cm)
Cargo Box (L x W x H)	58 x 48 x 10 in. (147 x 122 x 25.4 cm)
Ground Clearance	7.2 in. (18 cm)
Min. Turning Radius	180 in. (457.2 cm)
Engine	4 valve 4 stroke twin cylinder with counter balance
Displacement	683 cc
Bore x Stroke	80 x 68
Alternator Output	500 W @ 3000 RPM
Compression Ratio	9.40:1
Starting System	Electric
Fuel System	Electronic Fuel Injection
Ignition System	ECU
Spark Plug / Gap	RC7YC /.035 in. (0.9 mm)
Front Suspension	MacPherson strut w/6.25 in. (15.9 cm) of travel
Center Suspension	Independent w/ 5.25 in. (13.3 cm) of travel
Rear Suspension	Swing arm w/dual shocks w/6.25 in. (15.9 cm) of travel

RANGER 6X6 700 EFI	
Lubrication System	Pressurized Wet Sump
Engine Oil	2W-50
Driving System Type	PVT
Shift Type	Single Lever, Console (H/L/N/R)
Gear Reduction - Low	8.71:1
Gear Reduction - Reverse	5.9:1
Gear Reduction - High	3.14:1
Drive Ratio - Front:	3.83:1
Drive Ratio - Final	3.70:1
Tire Size - Front	25 x 10 - 12
Tire Size - Center/Rear	25 x 11 - 12
Tire Pressure - Front	8-12 psi
Tire Pressure - Rear	8-12 psi
Brakes, Front/Rear	Foot Activated, 4 wheel hydraulic disc
Brake, Park	Hand activated, mechanical
Hood Headlight	2 single beam, 50W, quartz/halogen
Taillights	2 single beam, 5W
Brake Light	2 single beam, 5W
Indicator Light	1.0 W

NOTE: See your Polaris dealer for clutching specifications.

POLARIS PRODUCTS

Part Number	Description
Engine Lubricant	
2870791	Fogging Oil (12 oz. Aerosol)
2876244	PS-4 PLUS Performance Synthetic 2W-50 4-Cycle Oil (qt./.95 l)
2876245	PS-4 PLUS Performance Synthetic 2W-50 4-Cycle Oil (gal./3.8 l)
Gearcase / Transmission Lubricants	
2873602	Premium AGL Synthetic Gearcase Lubricant (qt.)
2873603	Premium AGL Synthetic Gearcase Lube (gal.)
2871653	Premium ATV Angle Drive Fluid (8 oz.)
2872276	Premium ATV Angle Drive Fluid (2.5 gal.)
2870465	Pump for Gallon Jug
2871654	Premium Demand Drive Hub Fluid (8 oz.)
2872277	Premium Demand Drive Hub Fluid (2.5 gal.)
Coolant	
2871323	60/40 Coolant (gal.)
2871534	60/40 Coolant (qt.)
Grease / Specialized Lubricants	
2871312	Grease Gun Kit, Premium All Season (3 oz.)
2871322	Premium All Season Grease (3 oz. cartridge)
2871423	Premium All Season Grease (14 oz. cartridge)
2871460	Starter Drive Grease (2 oz.)
2871515	Premium U-Joint Lube (3 oz.)
2871551	Premium U-Joint Lube (14 oz.)
2871329	Dielectric Grease (Nyogel™)
2872073	Chain Lube, Aerosol (6.25 oz.)
2872348	Chain Lube, Aerosol (16 oz.)
Additives / Miscellaneous	
2871326	Carbon Clean Plus (12 oz.)
2872189	DOT 4 Brake Fluid
2871956	Loctite™ 565 Thread Sealant
2871076	Polaris Battery Tender™ Charger

Drive Belt Wear/Burn

Possible Cause	Solution
Driving onto a pickup or tall trailer in high range	Use low range during loading.
Starting out going up a steep incline	Use low range. See warnings on page 46.
Driving at low RPM or ground speed (3-7 MPH)	Drive at a higher speed or use low range more frequently. See page 82.
Insufficient warm-up at low ambient tempera-tures	Warm the engine at least 5 minutes. With the transmission in neutral, advance the throttle to about 1/8 throttle in short bursts, 5 to 7 times. The belt will become more flex-ible and prevent belt burning.
Slow/easy clutch engage-ment	Use the throttle quickly and effectively.
Towing/pushing at low RPM/low ground speed	Use low range only.
Utility use/plowing	Use low range only.
Stuck in mud or snow	Shift the transmission to low range and carefully use fast, aggressive throttle application to engage clutch. **WARNING**: Excessive throttle may cause loss of control and vehicle overturn.
Climbing over large objects from a stopped position	Shift the transmission to low range and carefully use fast, brief, aggressive throttle application to engage clutch. **WARNING**: Excessive throttle may cause loss of control and vehicle overturn.
Belt slippage from water or snow ingestion into the PVT system	Dry out the PVT. See page 84. Inspect clutch seals for damage if repeated leaking occurs.
Clutch malfunction	See your Polaris dealer.
Poor engine performance	Check for fouled plugs or foreign material in gas tank or fuel lines. See your dealer.
Slippage from failure to warm up belt	Always warm up the belt by operating below 30 mph for one mile (5 miles or more when temperature is below freezing).
Wrong or missing belt	Install the recommended belt.
Improper break-in	Always break in a new belt and/or clutch. See pages 40 and 82.

TROUBLESHOOTING

Park Brake Engine Limiting Feature Fails to Disengage

Possible Cause	Solution
Park brake is not completely disengaged	Ensure lever is in forward-most position
Park brake connector malfunction or switch movement or failure	Disconnect the connector if temporary continued operation is necessary, see your dealer promptly for service

Engine Doesn't Turn Over

Possible Cause	Solution
Low battery voltage	Recharge the battery to 12.8 VDC
Loose battery connections	Check all connections and tighten
Loose solenoid connections	Check all connections and tighten
Loose electronic control box connections	Inspect, clean, reinstall connectors

Engine Turns Over, Fails to Start

Possible Cause	Solution
Out of fuel	Refuel
Clogged fuel filter	Inspect and clean or replace
Water is present in fuel	Drain the fuel system and refuel
Old or non-recommended fuel	Replace with fresh recommended fuel
Fouled or defective spark plugs	Inspect plugs and replace if necessary
No spark to spark plug	Inspect plugs and replace if necessary
Water or fuel in crankcase	Immediately see your Polaris dealer
Low battery voltage	Recharge the battery to 12.8 VDC
Mechanical failure	See your dealer

Engine Backfires

Possible Cause	Solution
Weak spark from spark plug	Inspect, clean and/or replace spark plugs
Incorrect spark plug gap or heat range	Set gap to specs or replace plugs
Old or non-recommended fuel	Replace with fresh recommended fuel
Incorrectly installed spark plug wires	See your dealer
Incorrect ignition timing	See your dealer
Mechanical failure	See your dealer
Loose ignition connections	Check all connections and tighten
Water present in fuel	Replace with fresh recommended fuel

Engine Pings or Knocks

Possible Cause	Solution
Poor quality or low octane fuel	Replace with recommended fuel
Incorrect ignition timing	See your dealer
Incorrect spark plug gap or heat range	Set gap to specs or replace plugs

Engine Runs Irregularly, Stalls or Misfires

Possible Cause	Solution
Fouled or defective spark plugs	Inspect, clean and/or replace spark plugs
Worn or defective spark plug wires	See your dealer
Incorrect spark plug gap or heat range	Set gap to specs or replace plugs
Loose ignition connections	Check all connections and tighten
Water present in fuel	Replace with new fuel
Low battery voltage	Recharge battery to 12.8 VDC
Kinked or plugged fuel tank vent line	Inspect and replace
Incorrect fuel	Replace with recommended fuel
Clogged air filter	Inspect and clean or replace
Other mechanical failure	See your dealer
Possible Lean Fuel Cause	**Solution**
Low or contaminated fuel	Add or change fuel, clean the fuel system
Low octane fuel	Replace with recommended fuel
Clogged fuel filter	Replace filter
Possible Rich Fuel Cause	**Solution**
Fuel is very high octane	Replace with lower octane fuel

TROUBLESHOOTING

Engine Stops or Loses Power

Possible Cause	Solution
Out of fuel	Refuel
Kinked or plugged fuel vent line	Inspect and replace
Water is present in fuel	Replace with new fuel
Fouled or defective spark plugs	Inspect, clean and/or replace spark plug
Worn or defective spark plug wires	See your dealer
Incorrect spark plug gap or heat range	Set gap to specs or replace plug
Loose ignition connections	Check all connections and tighten
Low battery voltage	Recharge the battery to 12.8 VDC
Incorrect fuel	Replace with fresh recommended fuel
Clogged air filter	Inspect and clean or replace
Other mechanical failure	See your dealer
Overheated engine	Clean radiator screen and core, clean engine exterior, see your dealer

LIMITED WARRANTY

Polaris Sales Inc., 2100 Highway 55, Medina, MN 55340, gives a SIX MONTH LIMITED WARRANTY on all components of the Polaris *RANGER* against defects in material or workmanship. Polaris also gives a one year limited warranty on the final drive chain for failure due to defects. This warranty covers the parts and labor charges for repair or replacement of defective parts which are covered by this warranty. This warranty begins on the date of purchase. This warranty is transferable to another consumer during the warranty period through a Polaris dealer.

REGISTRATION

At the time of sale, the Warranty Registration Form must be completed by your dealer and submitted to Polaris within ten days. Upon receipt of this registration, Polaris will record the registration for warranty. No verification of registration will be sent to the purchaser as the copy of the Warranty Registration Form will be the warranty entitlement. If you have not signed the original registration and received the customer copy, please contact your dealer immediately. NO WARRANTY COVERAGE WILL BE ALLOWED UNLESS YOUR VEHICLE IS REGISTERED WITH POLARIS.

Initial dealer preparation and set-up of your vehicle is very important in ensuring trouble-free operation. Purchasing a machine in the crate or without proper dealer set-up will void your warranty coverage.

WARRANTY COVERAGE AND EXCLUSIONS: LIMITATIONS OF WARRANTIES AND REMEDIES

The Polaris limited warranty excludes any failures that are not caused by a defect in material or workmanship. This warranty does not cover accidental damage, normal wear and tear, abuse or improper handling. This warranty also does not cover any vehicle that has been altered structurally, modified, neglected, improperly maintained, used for racing, or used for purposes other than for which it was manufactured, or for any damages which occur during trailer transit or as a result of unauthorized service or the use of unauthorized parts. In addition, this warranty does not cover physical damage to paint or finish, stress cracks, tearing or puncturing of upholstery material, corrosion, or defects in parts, components or the vehicle due to fire, explosions or any other cause beyond Polaris' control.

This warranty does not cover the use of unauthorized lubricants, chemicals, or fuels that are not compatible with the vehicle. The exclusive remedy for breach of this warranty shall be, at Polaris' exclusive option, repair or replacement of any defective materials, or components or products. THE REMEDIES SET FORTH IN THIS WARRANTY ARE THE ONLY REMEDIES AVAILABLE TO ANY PERSON FOR BREACH OF THIS WARRANTY. POLARIS SHALL HAVE NO LIABILITY TO ANY PERSON FOR INCIDENTAL, CONSEQUENTIAL OR SPECIAL DAMAGES OF ANY DESCRIPTION, WHETHER ARISING OUT OF EXPRESS OR IMPLIED WARRANTY OR ANY OTHER CONTRACT, NEGLIGENCE, OR OTHER TORT OR OTHERWISE. Some states do not permit the exclusion or limitation of incidental or consequential damages or implied warranties, so the above limitations or exclusions may not apply to you if inconsistent with controlling state law.

WARRANTY

LIMITATIONS OF WARRANTIES AND REMEDIES

ALL IMPLIED WARRANTIES (INCLUDING BUT NOT LIMITED TO THE IMPLIED WARRANTIES OF MERCHANTABILITY AND FITNESS FOR A PARTICULAR PURPOSE) ARE LIMITED IN DURATION TO THE ABOVE SIX MONTH WARRANTY PERIOD. POLARIS FURTHER DISCLAIMS ALL EXPRESS WARRANTIES NOT STATED IN THIS WARRANTY. Some states do not allow limitations on how long an implied warranty lasts, so the above limitation may not apply to you if inconsistent with controlling state law.

HOW TO OBTAIN WARRANTY SERVICE

If your vehicle requires warranty service, you must take it to a Polaris Servicing Dealer. When requesting warranty service you must present your copy of the Warranty Registration form to the dealer. (THE COST OF TRANSPORTATION TO AND FROM THE DEALER IS YOUR RESPONSIBILITY). Polaris suggests that you use your original selling dealer; however, you may use any Polaris Servicing Dealer to perform warranty service.

Please work with your dealer to resolve any warranty issues. Should your dealer require any additional assistance they will contact the appropriate person at Polaris.

This warranty gives you specific legal rights, and you may also have other rights which vary from state to state.

If any of the above terms are void because of state or federal law, all other warranty terms will remain in effect.

Lubricants

1. Mixing oil brands or using non-recommended oil may cause engine damage. We recommend the use of Polaris engine oil.

2. Damage resulting from the use of non-recommended lubricants may not be covered by warranty.

SPARK ARRESTOR

Polaris warrants that the spark arrestor in this vehicle will meet the efficiency requirements of 43 CFR 8343.1(c) for at least 1000 hours when subjected to normal use and when maintenance and installation are in accordance with Polaris recommendations.

Exported Vehicles

EXCEPT WHERE SPECIFICALLY REQUIRED BY LAW, THERE IS NO WARRANTY OR SERVICE BULLETIN COVERAGE ON THIS VEHICLE IF IT IS SOLD OUTSIDE THE COUNTRY OF THE SELLING DEALER'S AUTHORIZED LOCATION.

This policy does not apply to vehicles that have received authorization for export from Polaris Industries. Dealers may not give authorization for export. You should consult an authorized dealer to determine this vehicle's warranty or service bulletin coverage if you have any questions.

This policy does not apply to vehicles registered to government officials or military personnel on assignment outside the country of the selling dealer's authorized location.

This policy does not apply to Safety Recalls.

How to Get Service

In the Country where your vehicle was purchased:

Warranty or Service Bulletin repairs must be done by an authorized Polaris dealer. If you move or are traveling within the country where your vehicle was purchased, Warranty or Service Bulletin repairs may be requested from any authorized Polaris dealer who sells the same line as your vehicle.

Outside the Country where your vehicle was purchased:

If you are traveling temporarily outside the country where your vehicle was purchased, you should take your vehicle to an authorized Polaris dealer. You must show the dealer photo identification from the country of the selling dealer's authorized location as proof of residence. Upon residence verification, the servicing dealer will be authorized to perform the warranty repair.

If You Move:

If you move to another country, be sure to contact Polaris Customer Assistance and the customs department of the destination country before you move. Vehicles importation rules vary considerably from country to country. You may be required to present documentation of your move to Polaris Industries in order to continue your warranty coverage. You may also be required to obtain documentation from Polaris Industries in order to register your vehicle in your new country.

If Purchased From A Private Party:

If you purchase a Polaris product from a private citizen outside of the country in which the vehicle was originally purchased, all warranty coverage will be denied.

Notice

If your vehicle is registered outside of the country where it was purchased, and you have not followed the procedure set out above, your vehicle will no longer be eligible for warranty or service bulletin coverage of any kind. (Vehicles registered to Government officials or military personnel on assignment outside of the country where the vehicle was purchased will continue to be covered by the basic warranty.)

For questions call Polaris Customer Assistance:

United States: 1-888-704-5290

Canada: 1-204-925-7100

WARRANTY

U.S.A. EPA Emissions Limited Warranty

This All Terrain Vehicle (ATV) or Off Road Utility Vehicle (ORUV) emissions limited warranty is in addition to the Polaris standard limited warranty for this vehicle.

Polaris warrants that this vehicle is; (1) designed, built, and equipped to conform at the time of initial sale with the requirements of 40 CFR 1051 and, (2) free from defects in materials and workmanship that may keep it from meeting these requirements.

The emissions warranty period for this vehicle begins on the date the vehicle is delivered to the original retail purchaser and ends 30 months (2.5 years) after that date, or after 5000 km (3100 miles), whichever comes first.

This emission-related warranty covers components whose failure would increase an engine's emissions, including electronic controls, fuel injection, exhaust-gas recirculation, aftertreatment, or any other system utilized in this vehicle to control emissions. Replacing or repairing other components not covered by this emissions warranty or the standard warranty is the responsibility of the owner; including the parts, labor and other costs associated with recommended maintenance.

The exclusive remedy for breach of this limited warranty shall be, at the exclusive option of Polaris, repair or replacement of any defective materials, components or products. THE REMEDIES SET FORTH IN THIS LIMITED WARRANTY ARE THE ONLY REMEDIES AVAILABLE TO ANY PERSON FOR BREACH OF THIS WARRANTY. POLARIS SHALL HAVE NO LIABILITY TO ANY PERSON FOR INCIDENTAL, CONSEQUENTIAL OR SPECIAL DAMAGES OF ANY DESCRIPTION,WHETHER ARISING OUT OF EXPRESS OR IMPLIED WARRANTY OR ANY OTHER CONTRACT, NEGLIGENCE OR OTHER TORT OR OTHERWISE.

ALL IMPLIED WARRANTIES (INCLUDING BUT NOT LIMITED TO ANY IMPLIED WARRANTIES OF MERCHANTABILITY AND FITNESS FOR A PARTICULAR PURPOSE) ARE LIMITED IN DURATION TO THE WARRANTY PERIOD DESCRIBED HEREIN. POLARIS DISCLAIMS ALL EXPRESS WARRANTIES NOT STATED IN THIS WARRANTY. Some states do not allow limitations on how long an implied warranty lasts, so the above limitation may not apply if it is inconsistent with the controlling state law.

This limited warranty excludes failures not caused by a defect in material or workmanship. This limited warranty does not cover damage due to accidents, abuse or improper handling, maintenance or use. This limited warranty also does not cover any engine that has been structurally altered, or any engine that has been used in racing competition. This limited warranty also does not cover physical damage, corrosion or defects caused by fire, explosions or other similar causes beyond the control of Polaris.

If you have any questions regarding your warranty rights and responsibilities, you should contact the Polaris Warranty Department at 1-888-704-5290.

California Emission Control Warranty Statement

The Air Index of this Engine is 3

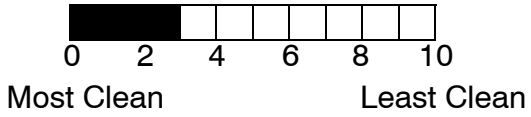

Note: The lower the Air Index, the less pollution.

This engine is certified to be emission compliant for 1000 hours of use.

Your Warranty Rights and Obligations

The California Air Resources Board and Polaris Industries Inc., 2100 Highway 55, Medina, Minnesota 55340 (herein "POLARIS") are pleased to explain the emission control system warranty on your 2005 and later Large Spark Ignition Engine (herein "LSI engine"). "The California Air Resources Board has designated this engine for this vehicle as an LSI engine which produces 25 and greater horsepower and the vehicle has a six (6) or four (4)-wheel drive and/or a round steering wheel." In California, this LSI engine must be designed, built and equipped to meet the state's stringent anti-smog standards. Polaris must warrant the emission control system on your LSI engine for the period of time described below, provided there has been no abuse, neglect or improper maintenance of your LSI engine.

Your emission control system includes parts such as the carburetor and the ignition system. Also included may be hoses, connectors and other emission-related assemblies.

Where a warrantable condition exists, POLARIS will repair your LSI engine at no cost to you, including diagnosis, parts and labor.

Manufacturer's Warranty Coverage:

The 2005 and later LSI engines are warranted for two (2) years. If any emission related part on your LSI engine is defective, the part will be repaired or replaced by POLARIS.

WARRANTY

California Emission Control Warranty Statement

Owner's Warranty Responsibilities:

- As the LSI engine owner, you are responsible for the performance of the required maintenance listed in your Owner's Safety and Maintenance Manual (herein "Owner's Manual"). POLARIS recommends that you retain all receipts covering maintenance on your LSI engine, but POLARIS cannot deny warranty solely for the lack of receipts or for your failure to ensure the performance of all scheduled maintenance.
- As the LSI engine owner, you should, however, be aware that POLARIS may deny you warranty coverage if your LSI engine or a part has failed due to abuse, neglect, improper maintenance or unapproved modifications.
- You are responsible for presenting your LSI engine to a dealer authorized by POLARIS as soon as a problem exists. The warranty repairs should be completed in a reasonable amount of time, not to exceed 30 days.

If you have any questions regarding your warranty rights and responsibilities, you should contact the Polaris Warranty Department at 1-888-704-5290.

Limited Warranty California Only

POLARIS warrants to the owner of 2005 and later LSI engines that the LSI engine (1) has been designed, built, and equipped at the time of manufacture so as to conform with the applicable regulations of the California Air Resources Board and, (2) is free from defects in materials and workmanship which may cause it to fail to conform with those regulations as applicable according to the terms and conditions stated below.

Warranty Period

This warranty period begins on the date, which the LSI engine is delivered, to the original retail purchaser and ends two years after that date. During this two year period POLARIS warrants to the original retail purchaser and each subsequent purchaser that the LSI engine is free from defect in material and workmanship that can cause the failure of a warranted emission-related part.

What is Covered Under This Warranty

Repair and/or replacement of any warranted emission-related part will be performed at no charge provided the work is performed at an authorized dealer. There will also be no charge for any diagnostic labor performed at an authorized dealer, which leads to the determination that a warranted emission-related part is defective.

Any warranted part which is not scheduled for replacement as required maintenance, or which is scheduled only for regular inspection to the effect of "repair or replace as necessary" shall be warranted for the warranty period. Any warranted part which is scheduled for replacement as required maintenance shall be warranted for the period of time up to the first scheduled replacement of that part. This warranty shall apply only towards the repair, replacement, and/or adjustment of the component parts listed below.

California Emission Control Warranty Statement

Emission-Related Parts Covered Under This Warranty

(1) Fuel Metering System
  (i) Carburetor and internal parts (and/or pressure regulator or fuel injection system)
  (ii) Air/fuel ratio feedback and control system, if applicable
  (iii) Cold start enrichment system, if applicable
  (iv) Regulator assy (gaseous fuel, if applicable)
(2) Air Induction System
  (i) Intake manifold, if applicable
  (ii) Air filter
(3) Ignition System
  (i) Spark plugs
  (ii) Magneto or electronic ignition system
  (iii) Spark advance/retard system, if applicable
(4) Exhaust manifold, if applicable
(5) Miscellaneous Items Used in Above Systems
  (i) Electronic controls, if applicable
  (ii) Hoses, belts, connectors, and assemblies
  (iii) Filter lock assy (gaseous fuel, if applicable)

If an authorized dealer determines that other LSI engine components have been damaged due to the failure of a warranted emission-related part during the warranty period, POLARIS will repair and/or replace the necessary components.

WARRANTY

California Emission Control Warranty Statement

What is Not Covered Under This Warranty

This warranty does not cover any emission-related part which malfunctions, fails or is damaged due to alterations and/or modifications such as changing, adding or removing parts.

When the LSI engine is being serviced under warranty, POLARIS and any of its authorized dealers shall not be liable for any loss of use of the LSI engine, for any damage to goods, or loss of time or inconvenience. This limited warranty also does not apply to any emission-related part which malfunctions, fails, or is damaged due to failure to follow the maintenance and operating instructions specified in the 2005 and later Owner's Manual including:

(a) Improper or inadequate maintenance of any warranted emission-related part

(b) Improper installation, adjustment, or repair of the LSI engine or any warranted emission-related part unless performed by an authorized dealer

(c) Failure to use recommended fuel as specified in the 2005 and later Owner's Manual

(d) Repairs and diagnosis performed outside of an authorized dealer

(e) Use of parts which are not authorized by POLARIS

Maintenance Schedule

The LSI engine owner is responsible for having all scheduled inspection and maintenance services performed at the intervals specified in the 2005 and later Owner's Manual and to retain records of these services as having been performed. These records should be transferred to each subsequent owner of the LSI engine. POLARIS cannot deny a claim solely because there are no records of scheduled maintenance, however, a warranty claim may be denied if the failure to perform the scheduled maintenance and inspection resulted in the failure of a warranted emission-related part. As a minimum, the LSI engine owner is responsible for the scheduled inspection and maintenance described below which are based on the procedures described in the Owner's Manual.

▶ Perform these procedures more often for vehicles subjected to severe use.
E Emission-Related Service.
■ Have an authorized Polaris dealer perform these services

Item		Maintenance Interval (whichever comes first)			Remarks
		Hours	Calendar	Miles (Km)	
▶ E	Air filter, pre-filter	-	Daily	-	Inspect; clean often
▶ E	Air box sediment tube	-	Daily	-	Drain deposits when visible
▶ E	Air filter, main element	-	Weekly	-	Inspect; replace as needed
▶ E	Engine breather filter (if equipped)	25 H	Monthly	-	Inspect; replace if necessary
■ E	Throttle Cable/ ETC Switch	50 H	6 M	-	Inspect; adjust; lubricate; replace if necessary
E	Throttle body air intake ducts/flange	50 H	6 M	-	Inspect ducts for proper sealing/air leaks
■ E	Valve clearance	100 H	12M	-	Inspect; adjust
■ E	Fuel system	100 H	12 M	-	Check for leaks at tank cap, lines, fuel valve, filter, pump, throttle body; replace lines every two years
■ E	Spark plug	100 H	12 M	-	Inspect; replace as needed

Repair and Replacement of Emission-Related Parts

It is recommended that only LSI engine replacement parts, which have been authorized and approved by POLARIS, should be used in the performance of any warranty maintenance or repairs of emission-related parts. These replacement parts will be provided at no charge if the part is still under warranty.

How to File a Warranty Claim/Where to Get Warranty Service

All repairs qualifying under this Limited Warranty must be performed by a dealer who sold you the LSI engine or a dealer authorized by POLARIS. In the event that any emission-related part is found to be defective during the warranty period, you must notify the Polaris Warranty Department at 1-888-704-5290 and you will be advised of the appropriate dealer where the warranty repair is to be performed.

MAINTENANCE LOG

Use the following chart to record periodic maintenance.

DATE	MILES (KM) OR HOURS	TECHNICIAN	SERVICE PERFORMED / COMMENTS

MAINTENANCE LOG

DATE	MILES (KM) OR HOURS	TECHNICIAN	SERVICE PERFORMED / COMMENTS

INDEX

A

Accessory Outlet 34
Adding Coolant 79
Adjustment, Headlight Beam. 96
Adjustment, Park Brake. 90
Adjustment, Rear Spring 91
Adjustment, Rear Suspension 91
Adjustment, Throttle Freeplay. 88
Age Restrictions. 8
Air Filter 85
Air Filter Cleaning. 85
All Wheel Drive. 58
All Wheel Drive Lock Switch 39
Arrestor, Spark, Warning. 86
Auxiliary Outlet. 34
AWD 58
AWD Diagnostics 29
AWD/Differential Lock Switch. . . . 39
Axle Nut Torque 93

B

Battery 98-103
Charging (Conventional) 102
Charging (Sealed Battery) 102-103
Battery Fluid Replenishment 101
Battery Installation. 100
Battery Removal 99
Battery Storage 101
Beam Adjustment, Headlight. 96
Before Riding. 41
Belt Burning. 115
Belt Life 55
Belt Wear 115
Belts, Seat 33, 92
Blink Codes 31-32
Brake Fluid 89
Brake Inspection 90
Brake Lights. 96
Brake Pedal 36
Brake, Park 37
Brake, Park, Adjustment 90
Brakes 89-90
Braking 43
Break-In Period 40
Burning Belts 115
Button, Mode 34

C

Cap, Fuel 33
Capacity, Weight 53
Cargo 52-53
Cargo Box, Dumping. 54
Changing Coolant 79
Changing Gears 35
Changing Oil, Front Gearcase 73
Changing Oil, Middle Gearcase 74
Changing Oil, Rear Gearcase 76
Changing Oil, Transmission 72
Chart, Gearcase Specifications 70
Chart, Periodic Maintenance 60-64
Checking Oil, Front Gearcase 73
Checking Oil, Middle Gearcase. 74
Checking Oil, Transmission 71
Chrome Wheel Care 106
Cleaning and Storage. 104-108
Cleaning the Air Filter. 85
Cleaning the Exhaust System 86
Cleaning the Fuel Filter. 85
Cleaning the Spark Arrestor 86
Clock, Setting 28
Component Locations 22-25
Condition, Spark Plugs 78
Console 34
Coolant Level 80
Coolant Level, Radiator. 81
Coolant, Adding or Changing 79
Cooling Fan 80
Cooling System 80-81
Cooling System Operation. 79
Corrosion Removal, Chrome. 106
Cover for Storage. 108
Crankcase Emission Control System. 59

D

Depth, Tread 93
Diagnostic Mode 28-30
Diagnostics, AWD. 29
Diagnostics, EFI Blink Codes 32
Diagnostics, Gear Circuit 29
Differential Lock 57
Differential Lock Switch 39
Disengaging AWD 58
Downloading Blink Codes. 31-32
Drive Belt Wear. 115

D

Drivetrain Break-In 40
Driving Downhill 47
Driving in Reverse 50
Driving on a Sidehill 47
Driving on Slippery Surfaces 45
Driving Over Obstacles 49
Driving Procedure 44
Driving Safely 44-56
Driving Through Water 48
Driving Uphill 46
Driving, After Driving in Water 84
Drying the Transmission 84
Dumping the Cargo Box 54

E

EFI Blink Codes 31-32
Electromagnetic Interference 59
Emission Control, Crankcase 59
Emission Control, Exhaust 59
Emission Control, Noise 59
Emissions Limited Warranty 122
Engine Break-In 40
Engine Fogging 108
Engine Idle Speed 88
Engine Oil 67-70
Engine Speed Display 29
Engine Starting 42
Engine Stopping 43
Equipment Modifications 13
Exhaust Cleaning 86
Exhaust Emission Control System . . 59
Exhaust System Warning 86

F

Fan, Cooling 80
Filling the Battery 101
Filter Care During Storage 107
Filter Cleaning, Air 85
Filter Cleaning, Fuel 85
Filter Systems 85
Filter, Air 85
Filter, Fuel 85
Fluid Levels During Storage 107
Fluid, Battery 101
Fluid, Brake 89
Fogging the Engine 108
Fouled Plugs 78

F

Freeplay Adjustment, Throttle 88
Freeplay, Steering Wheel 91
Front Gearcase Lubrication 73
Front Gearcase Oil Change 73
Front Gearcase Oil Check 73
Fuel Cap 33
Fuel Filter 85
Fuel Safety 21
Fuel Stabilizer 107
Fuel Tank Filler Cap 33

G

Gap, Spark Plug 77
Gear Circuit Diagnostics 29
Gear Selector 35
Gearcase Lubrication 71
Gearcase Specification Chart 70
Gearcase, Main, Lubrication 71
Gearcases 70-76
Gears, shifting 35

H

Hauling a Load 52-53
Hauling Cargo 52-53
Headlight Beam Adjustment 96
Headlight Lamp Replacement 95
Hitch 24
Hitch Weight 55
Hour Meter 27

I

Idle Speed 88
Ignition Switch 38
Indicator, Service Interval 29-30
Inspection, Axle Nuts 93
Inspection, Brakes 90
Inspection, Park Brake 90
Inspection, Pre-Ride 41
Inspection, Seat Belts 92
Inspection, Steering Wheel 91
Inspection, Throttle Freeplay 87
Inspection, Wheel Nuts 93
Installation, Battery 100
Installation, Wheels 94
Instrument Cluster 25-32
Interference, Electromagnetic 59

INDEX

K

Key, Periodic Maintenance Chart . . 61
Kilometers to Miles Toggle 30

L

Lamp Replacement, Headlight 95
Level, Coolant 80-81
Light Switch. 39
Lights 95-96
Lights, Brake 96
Load Capacity 53
Loads, Towing 55
Lock, Differential 57
Lubricant Part Numbers. 114
Lubrication for Storage 107
Lubrication Recommendations . . 65-66
Lubrication, Front Gearcase 73
Lubrication, Gearcase 71
Lubrication, Main Gearcase. 71
Lubrication, Middle Gearcase 74
Lubrication, Rear Gearcase 75
Lubrication, Transmission 71

M

Main Gearcase Lubrication 71
Main Gearcase Oil Change 72
Main Gearcase Oil Check 71
Maintenance Log 128-129
Maintenance, Periodic 60-64
Middle Gearcase Lubrication 74
Middle Gearcase Oil Check. 74
Middle Gearcase, Oil Change 74
Miles to Kilometers Toggle 30
Mode Button 34
Modifications. 13

N

Noise Emission Control System . . . 59

O

Obstacles 49
Odometer 27
Oil and Filter Care During Storage 107
Oil Change, Engine 69-70
Oil Change, Front Gearcase. 73
Oil Change, Main Gearcase. 72
Oil Change, Middle Gearcase 74
Oil Change, Rear Gearcase 76

O

Oil Change, Transmission 72
Oil Check, Front Gearcase. 73
Oil Check, Main Gearcase. 71
Oil Check, Middle Gearcase 74
Oil Check, Rear Gearcase 75
Oil Check, Transmission 71
Oil Level, Engine. 68
Oil, Engine. 67-70
Operation on Public Lands 59
Operation, Cooling System 79
Operation, Transmission 82
Operator Safety 8-20

P

Park Brake 37
Park Brake Adjustment 90
Park Brake Inspection 90
Parking on an Incline. 51
Parking the Vehicle 56
Periodic Maintenance Chart 60-64
Plug Condition. 78
Plug Gap 77
Plug Torque 77
Plug, Accessory 34
Plugs, Fouled 78
Plugs, Spark. 77-78
Polaris Products 114
Polishing the Vehicle. 105
Pre-Ride Inspection 41
Pressure, Tire 5
Programmable Service Interval . . 29-30
Public Lands 59
PVT Break-In 40
PVT Drying 84
PVT System. 84
PVT System Operation 82
PVT Warning. 83

R

Radiator 80
Radiator Coolant Level 81
Rear Gearcase Lubrication 75
Rear Gearcase Oil Change. 76
Rear Gearcase Oil Check. 75
Rear Spring Adjustment 91
Rear Suspension Adjustment. 91
Receiver Hitch 24

R

Removal, Battery 99
Removal, Seat 33
Removal, Wheels 94
Removing the Vehicle from Storage 109
Replacement, Headlight Lamp 95
Reverse 50
Rider Information Center 26-32
RPM, Idle, Throttle Body 88

S

Safety Decals 5-7
Safety Symbols 9
Seat Belt Inspection 92
Seat Belts 33, 92
Seat Removal 33
Selector, Gear 35
Service Interval Indicator 29-30
Service Interval Programming 30
Severe Use Definition 60
Shifting Gears 35
Signal Words 9
Spark Arrestor Warning 86
Spark Arrestor, Cleaning 86
Spark Plug Condition 78
Spark Plug Gap 77
Spark Plug Removal 78
Spark Plug Torque 77
Spark Plugs 77-78
Spark Plugs, Fouled 78
Specifications, 4X4 110-111
Specifications, 6X6 112-113
Specifications, Gearcase 70
Speed, Idle 88
Speed, Towing 55
Speedometer 25
Spring, Rear, Adjustment 91
Stabilizing the Fuel 107
Starting the Engine 42
Steering Wheel Inspection 91
Stopping the Engine 43
Storage 104-108
Storage and Inspection 107
Storage and Lubrication 107
Storage Area 108
Storage, Battery 101
Storage, Covers 108
Storage, Fluid Levels 107
Storage, Oil and Filter 107
Storage, Removal 109
Suspension Adjustment, Rear 91

S

Switches 38-39
AWD Switch 39
Differential Lock Switch 39
Ignition 38
Light 39

T

Tachometer 27, 29
Throttle Freeplay Adjustment 88
Throttle Freeplay Inspection 87
Throttle Freeplay, Freeplay, Throttle 87
Throttle Pedal 36
Throttle System 87
Tire Pressure 5
Tire Tread Depth 93
Tires 93-94
Torque, Axle Nuts 93
Torque, Spark Plug 77
Torque, Wheel Nut 93
Towing Loads 55
Towing Speed 55
Trailer Hitch 24
Transmission Lubrication 71
Transmission Oil Change 72
Transmission Oil Check 71
Transmission Operation 82
Transmission System 84
Transmission Warning 83
Transmission, Drying 84
Transporting the Vehicle 109
Tread Depth 93
Trip Meter 27

V

Vehicle Identification Numbers 4
Vehicle Immersion 97
Vehicle Transport 109

W

Warning Symbols 9
Warning, Transmission Modification 83
Washing the Vehicle 104-105
Water, Immersion of Vehicle 97
Wear, Drive Belt 115
Weight Capacity 53
Weight, Hitch 55
Wheel Installation 94
Wheel Nut Torque 93
Wheel Removal 94