BRUSH BANDIT®

BUILT WITH QUALITY AND DESIGN FIRST

BRUSH CHIPPER

MODELS 250/254

OPERATING & PARTS MANUAL

ATTENTION:

Depending on what replacement parts you are ordering, we will need the following information:

CHIPPER COMPONENTS
Serial Number
Model Number of Chipper

ENGINE COMPONENTS
Brand
Engine Serial Number
Engine Spec. Number

CLUTCH COMPONENTS
Brand
Serial Number
Assembly of Clutch

Model No: _____

Serial No: _____

DEALER:

Name: _____

Address: _____

City/State: _____

Phone No: _____

Delivery Date: _____

Engine Make: _____

Serial No: _____

Clutch Make: _____

Model: _____ S/N _____

Copyright 8/07

MANUFACTURED BY
BANDIT INDUSTRIES, INC.
6750 Millbrook Road
REMUS, MICHIGAN, USA 49340
PHONE: (800) 952-0178 IN USA
PHONE: (989) 561-2270 OR 561-2272
FAX: (989) 561-2273 ~ SALES DEPT.
FAX: (989) 561-2962 ~ PARTS/SERVICE
E-MAIL: www.banditchippers.com

TABLE OF CONTENTS

	PAGES
INTRODUCTION & WARRANTY	2
SERIAL NUMBER LOCATION	6
SAFETY PROCEDURES	7
EQUIPMENT SPECIFICATIONS	13
DECALS	15
AUTOFEED OPTIONS	23
CONTROLS	27
TRANSPORTATION PROCEDURES	34
MAINTENANCE	37
HYDRAULIC SECTION	52
CHIPPER SECTION	70
LUBRICATION & COOLANT	73
ELECTRICAL SECTION	74
REPLACEMENT PARTS SECTION	75
INFEED HOPPER COMPONENTS	76
CHIPPER COMPONENTS	100
CHIPPER KNIFE & HARDWARE	104
ANVIL & HARDWARE	105
DISCHARGE COMPONENTS	106
HYDRAULIC COMPONENTS	112
FRAME & ACCESSORY COMPONENTS	122
FUEL & HYDRAULIC TANK COMPONENTS	128
OPTIONAL COMPONENTS	130
PTO COMPONENTS	133
SERVICE RECORD	146

NOTE - IF THE MACHINE HAS A LOADER OR TRACK UNDERCARRIAGE, CONTACT DEALER OR MANUFACTURER FOR MORE INFORMATION.

NOTE - IF THE MACHINE HAS A LOADER OR TRACK UNDERCARRIAGE, A SEPARATE (LOOSE) HYDRAULIC AND ELECTRIC SCHEMATIC IS SUPPLIED WITH THE MACHINE.

NOTE - ANY PART, PORTION, DESIGN, NUMBER, SPECIFICATION, AND/OR DIMENSION IN THIS MANUAL IS SUBJECT TO CHANGE WITHOUT NOTICE BY THE MANUFACTURER.

Copyright 8/07

INTRODUCTION

The purpose of this manual is to provide the user with specifications and procedures for the operation, maintenance and repair of this BANDIT product. As with any piece of equipment, safety should always be a constant thought while the machine is being operated, serviced or stored. In order to highlight this consideration, the material which addresses safety is proceeded by the following signal words:

Signal Word	Likelihood of Occurrence	Degree of Potential Injury or Damage
⚠ DANGER	Will occur if warning is ignored	Severe
⚠ WARNING	Can occur if warning is ignored	Severe
⚠ CAUTION	Will or can occur if warning is ignored	Minor to Severe
NOTICE	Important, but not hazard related	Minor

The equipment is designed and manufactured in accordance with the latest product industry standards. This alone does not prevent injury. It is the operator's responsibility to use good judgement and follow the warnings and instructions as indicated in this manual, on the machine and follow all safety standards per ANSI and OSHA instructions.

⚠ WARNING

Improper use of the product can result in severe personal injury. Personnel using the equipment must be qualified, trained and familiar with the operating procedures as defined in this manual, prior to operating the product.

⚠ WARNING

It is the responsibility of the owner or employer to insure that the operator is trained and practices safe operation while using and servicing the machine. It is also the owner's responsibility to provide and follow a regularly scheduled preventative maintenance and repair program on the product, using only factory approved replacement parts. Any unapproved repairs or modifications may not only damage the machine and its performance, but could result in severe personal injury. Unapproved repairs or modifications will void warranty and eliminate manufacturer of any liability claims. Consult the equipment manufacturer!!!

Each machine is shipped with a manual, a customer's check sheet on the product, and any available parts & service manuals on component parts not produced by this manufacturer. Additional copies of these manuals and check sheets can be purchased from the manufacturer, or through the dealer. Engine parts, service and maintenance manuals **MUST** be purchased through the engine manufacturer or their dealer.

NOTE - The producer of this Bandit product reserves the right to make any modifications or revisions to the design or specifications of its machine without advance notice. The producer also reserves the right to change machine and part prices as needed without advance notice.

Copyright 8/07

EXPLANATION OF LIMITED WARRANTY

The manufacturer will not reimburse the customer or dealer labor costs incurred for installing “bolt-on” or “slip-on” items, such as hydraulic pumps and motors, control valves, flow dividers, belts, sheaves, etc. The manufacturer will provide replacement parts to the customer for defective parts during the warranty period. **Defective parts must be returned to Bandit Industries, Inc.** It will be the customer’s responsibility to install the replacement parts unless arrangements are made with the selling dealer.

The manufacturer will not reimburse travel costs to servicing dealer unless prior approval has been obtained from the manufacturer. It is the customer’s responsibility to deliver the machine to dealer’s service facility, unless other arrangements have been agreed to between selling dealer and customer.

The manufacturer may elect, at its discretion, to reimburse reasonable labor costs to customer or dealer for major defect repairs. Diagnostic labor and overtime labor will not be covered under warranty. Prior approval must be obtained from Bandit Industries, Inc.

There are several forms that must be completely filled out and returned to us in reference to our portion of warranty. Read and understand the Bandit Limited Warranty responsibilities. Some components on your machine are covered by their respective manufacturers and cannot be handled through Bandit Industries as stated in Warranty Section of this manual.

Use this manual to help you resolve what and where your problem is, in most cases you can fix it easily. If you still have problems, work through the dealer you purchased the machine through, or contact Bandit Industries direct if needed.

Make sure the following forms are used, for us as well as you, to keep track of service and pending warranty request. It is our company policy that all parts shipped out will be invoiced until the possible warranty parts are returned with a Warranty Claim Form completed for consideration.

Make sure the Warranty Validation Form is completed and sent in to us as soon as you receive the Bandit. This will activate our warranty responsibilities.

If Warranty Validation Form is not on file, all Warranty consideration is null and void.

NOTE: Prior to delivery to final owner and during storage, this machine must be serviced and lubricated to avoid damage that will not be covered under warranty, see “Lubrication & Coolant” page.

Also, damage or premature failure of equipment components because of incorrect or incomplete service and maintenance by the equipment owner will not be covered under warranty.

All controls, safety devices, guards, and shields must be correctly operational and securely in place at all times during equipment operation.

Copyright 8/07

BANDIT INDUSTRIES INC. LIMITED WARRANTY
(989) 561-2270

Bandit Industries Inc., also referred to as “Manufacturer” warrants this new product to be free of defects in workmanship and material for a period of 1 year or 2000 operating hours, which ever comes first.

This warranty takes effect upon delivery to the original retail purchaser. The manufacturer at it’s option will replace or repair at a point designated by the manufacturer, any parts which appear to have been defective in material or workmanship. The manufacturer is not responsible for labor, consequential damages, traveling or down time expenses.

This warranty and any possible liability of Bandit Industries Inc., is expressly in lieu of any other warranties, expressed or implied, including but not limited to, any implied warranty or merchantability of fitness for a particular purpose and of any noncontractual liabilities including product liabilities based upon negligence or strict liability. Bandit Industries Inc., will not be liable for consequential damages resulting from breach of warranty.

All parties involved agree that the Owner’s Sole and Exclusive Remedy against the Manufacturer, whether in contract or arising out of this warranty, instructions, representations, or defects shall only be for the replacement or repair of defective parts as provided herein. In no event or circumstances shall the Manufacturer’s liability exceed the purchase price of the machine. The buyer also agrees that no other remedy (including but not limited to consequential or incidental loss) shall be available to him or her.

It is absolutely necessary to return the Warranty Validation Form, completely and accurately filled out, and notify Bandit Industries Inc., in writing within ten (10) days from the date of purchase to validate this warranty. If Warranty Validation Form is not on file, all Warranty Consideration is NULL AND VOID.

This warranty will <u>not</u> apply if the Bandit Chipper is not operated with replacement parts or equipment <u>not</u> manufactured or recommended by Bandit Industries, Inc.

This warranty will not apply if the Bandit Chipper is not operated in a manner recommended by the manufacturer. The following examples would void the warranty:

1. The completed Warranty Validation Form is not on file.
2. The Bandit Chipper has been abused, or not serviced properly.
3. Repairs or attempted repairs made without prior written authorization.
4. Repairs made due to normal wear are not warrantable.
5. The Chipper was involved in, or damaged by an accident.
6. The Chipper was damaged from any type of foreign material.

The owner is responsible for all scheduled maintenance as explained in the Operators Manuals. Negligence of proper maintenance or any other negligence, accident or fire; nor with failure to adjust, tighten, or replace wear items included but not limited to items such as knives, knife anvil, belts, lubrication fluids, bearings, filters, hydraulic components, loose nuts or bolts, etc. may void warranty.

All components and parts being returned to Bandit Industries for warranty consideration must be complete and assembled when delivered. Hydraulic components and parts must be returned assembled with all fluid ports capped or plugged and free of foreign contamination, or warranty will not be considered.

Copyright 8/07

BANDIT INDUSTRIES, INC. LIMITED WARRANTY
(989) 561-2270

NOTE: This warranty applies only to new and unused equipment or parts thereof manufactured by Bandit Industries Inc. and is void if the machine is operated with replacement parts or equipment not manufactured or recommended by Bandit Industries Inc.

All other components are warranted by their respective manufacturers (i.e. engines, axles, hydraulic pumps and motors, clutches, tires, batteries, etc.) Any machines used for lease or rental purposes warranty is limited to 90 days from the first day of initial service.

CONTINENTAL U.S. INFORMATION PHONE NUMBERS FOR ACCESSORIES (NOT COVERED UNDER PRODUCT WARRANTY PROGRAM)

Briggs & Stratton Engines	1-414-259-5333	PGL Auto Clutch	1-800-551-2938
Caterpillar Engines (Thru 275Hp)	1-800-551-2938	PT Tech Clutch	1-330-414-3172
Caterpillar Engines (300Hp & Up)	1-866-228-2111	Rockford Clutch	1-800-383-9204
Continental Engines	1-800-726-8870	Twin Disc Clutch	1-440-951-5111
Cummins Engines	1-248-573-1592	Electronic Solutions	1-866-736-6839
Deutz, Lombardini Engines	1-800-445-5273	E.S.I.	1-815-985-0383
Ford, Hatz Engines	1-800-726-8870	L.O.R. MFG.	1-866-644-8622
GM, Perkins Engines	1-800-551-2938	Miratron Inc.	1-866-285-0132
Honda Engines	1-734-453-6258	Omnex Radios	1-419-294-4985
John Deere Engines	1-888-803-9175	Dexter Axles	1-574-295-7888
Kohler Engines	1-800-854-9273	Tires	1-989-463-4088
Kubota Engines	1-800-832-7670	Caterpillar Tracks	1-309-636-1100
Robin Engines	1-248-399-0002	Chermack Tracks	1-715-458-2655
Wisconsin Engines	1-800-726-8870	Petro-Canada Hydrex XV	1-888-284-4572
Interstate Batteries	1-800-331-2000		

(Phone numbers for outside the continental U.S. can be supplied from your phone directory or local Bandit dealer.)

In order to process any warranty claims, it is the owner's responsibility to report the claims promptly to the Manufacturer, or our authorized dealer from whom the equipment was purchased.

It is necessary to include the following information on any and all requests for warranty:

1) Warranty Claim Form, obtained from Bandit Industries or it's dealers, completely and accurately filled out.
2) Dealer from whom purchased.
3) Date of delivery.
4) Serial number of unit.
5) Model number of unit.
6) Engine make and serial number.
7) Length of time in use (hours on machine).
8) Date of Failure.
9) Nature of Failure.

Bandit Industries Inc., reserves the right to alter, improve, revise or modify any parts or products with the altered, improved, revised or modified parts or products. They also may change design, specifications, or part prices without advance notice.

Bandit Industries Inc., is NOT responsible for updating or upgrading completed machines with design changes that are made after it's production.

Bandit Industries Inc., expects the Customer/Owner to bring their machine to the Dealer/Manufacturer for Warranty Repairs. The Manufacturer DOES NOT pay Dealers or Customers for bringing their machine in for repair. Nor does the Manufacturer furnish loaner machines while the unit is being repaired.

Copyright 8/07

TYPICAL CHIPPER SERIAL NUMBER AND/OR WORK ORDER NUMBER LOCATIONS

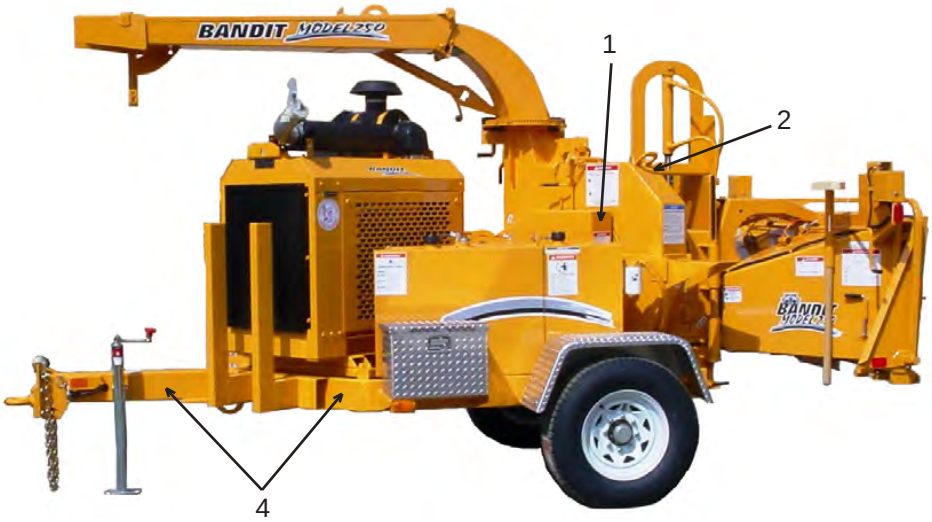

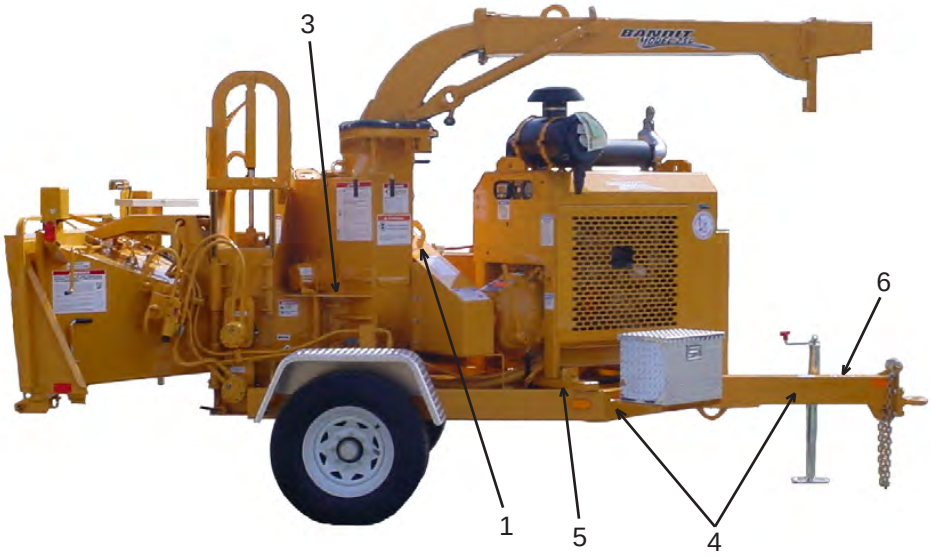

1. Beltshield
2. Hinged chipper hood under handle
3. Top of throat
4. Tongue and a-frame side
5. Top of frame
6. W/O # on top of tongue

NOTE: The engine information is located on the engine block. The clutch information is located on the clutch plate.

SAFETY PROCEDURES

⚠ DANGER

The words ⚠ Danger, ⚠ Warning, ⚠ Caution, and Notice are used on the safety decals and throughout this manual, to make you aware of the safety procedures. These procedures are very important, read and obey them.

YOUR SAFETY IS VERY IMPORTANT TO US!

This machine is equipped with safety decals, guards and designs for your protection.

Don't ever take the machine for granted, always be cautious and careful when operating your equipment.

Read and follow all the instructions in your manual thoroughly. Your safety is dependent on your knowledge of how to operate and maintain this machine. You may obtain additional copies of this manual from your Bandit Dealer.

Before operating machine, you must have all potential operators; read and understand manuals and decals, watch the video and follow the recommendations.

Regardless of how hard a manufacturer tries to produce a safe machine, accidents still happen. Normally accidents are caused by people making mistakes. They do not read the manual, they ignore warning decals or do not use lockouts provided for their safety. This normally happens after the person has become accustomed to the machinery. In the initial start up and operation of the machinery, they are cautious, they are very careful because they do not understand the machine.

This equipment is intended for use by personnel who are experienced with similar equipment. Always operate safely. It is also recommended that someone else is present while operating or servicing in case an accident should occur. Never operate any machine while under the influence of drugs or alcohol.

Keep children, bystanders and animals clear of working area. Never operate equipment that is in need of repair or adjustment.

NOTICE

Striped reflective tape has been installed on the feed control handle of the machine. This tape is reflective, self adhesive and has contrasting colors. The tape helps make the feed control handle stand out more and it makes the rear of the machine more visible to a vehicle behind the machine while transporting. Striped tape can be obtained through your local Bandit Dealer.

⚠ DANGER

Before starting the machine, take a minute to check a few things. The machine should be in an area restricted from people passing by. This area around the machine must be free of all objects that can obstruct your movement when working with the machine. The machine should be checked for loose tools or foreign objects, especially in the infeed hopper area. All tools not in use should be secured in a tool box.

⚠ WARNING

Operators **must** at all times be located within easy reach of all feed control and shut-off devices when the unit is running. They must be attentive and prepared to activate the devices.

⚠ DANGER

Torn or loose clothing is more likely to get caught in moving machinery parts or tree branches. Keep such items as long hair, shirt sleeves, and shirt tails properly contained. Avoid wearing necklaces, rings, watches, and especially neckties while operating this machinery. Make sure the machine is in excellent condition, and all the guards are in place, tight and secure.

Wear all personal protection equipment and follow all safety standards per ANSI and OSHA instructions. Examples of equipment: hard hat, face shield, safety glasses, gloves, ear protection, etc. Do not wear gauntlet or secured fit gloves. Always keep a fully charged fire extinguisher with the machine while operating or servicing the machine.

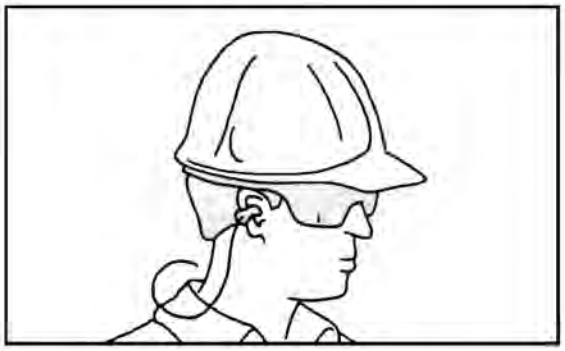

Copyright 8/07

SAFETY PROCEDURES

⚠ DANGER

Always block the tires and the machine tongue whenever the machine is unhooked for operation. DO NOT rely on the tongue jack for operational stabilization.

⚠ DANGER

Pay attention to the direction of the discharge chute before chipping. Never stand in front of the chipper discharge chute. Never direct the chute towards anyone or anything that could cause an accident or problems. Always stop chipping and warn anyone that comes near the discharge area. Failure to do this could result in severe injury. Wood chips flying out of the discharge chute can be very dangerous!

⚠ DANGER

NEVER sit, stand, lay, climb or ride anywhere on this machine while it is running, operating, or in transit. You will be injured.

⚠ WARNING

It is very important after you have operated a new machine for approximately an hour to shut down the machine and recheck all nuts and bolts. It is normal for nuts and bolts to loosen once on a new piece of machinery. If you tighten them now, there is a good possibility they won't loosen again. Certain nuts and bolts should be checked periodically such as anvil and knife nuts and bolts, etc. for torque and fit.

Most of the nuts used on the machine are self locking. After a nut or bolt has been removed five times, it should be replaced to insure proper tightness. This is especially critical on the chipper knife nuts and bolts!

After the engine is started, let the chipper disc/drum turn at the lowest RPM's possible. Listen for any type of noise that is foreign. Any steel on steel noise is foreign. If you hear a noise, stop the engine, find the problem and fix it.

⚠ WARNING

DO NOT operate this machine unless all hydraulic control devises operate properly. They must function, shift and position smoothly and accurately at all times. Faulty controls can cause personal injury!

⚠ DANGER

Never reach into the infeed hopper area of the machine, there is never any reason to. The feedwheel(s) are designed to pull trees and brush of any length into the machine. Pulling a hand, arm, foot or entire body through the machine is much easier than pulling a tree. Do not think you will be able to pull yourself free of the feedwheel(s), they will not let go. There is absolutely no reason to work inside of the infeed hopper. If the feedwheel(s) become tangled or clogged, stop the machine and wait several minutes before cleaning them out. If there are short pieces, or leaves and twigs, just leave them until feeding longer pieces. While the long pieces are feeding, simply toss the short pieces on top of them. The longer pieces will take them on into the machine.

A wooden push paddle has been provided to assist in feeding smaller material. It is the owner's and operator's responsibility to use and keep a wooden push paddle with the machine and to also secure it when transporting the machine. DO NOT use any body parts or any steel devices inside the infeed hopper area.

If there is larger diameter wood, try to feed it with smaller diameter wood. Start a small diameter limb which will partially open the feedwheel(s). Once the feedwheel(s) are partially open it is much easier to insert the larger diameter wood.

When feeding larger diameter wood, listen for the engine to possibly lug down. If it starts lugging down stop the feedwheel(s) by pushing the hydraulic control bar to off, and let the engine recover to full speed. If the machine is equipped with Autofeed and it is functioning properly, the feed system will automatically stop to let the engine recover. This will help stop the machine from plugging the discharge chute.

NOTICE

Do not attempt to start the engine or engage the engine PTO (power-take-off) system on this machine if the chipper disc/drum is jammed or frozen in place. If you do, you will damage or ruin the drive belts and/or the PTO which will not be covered under warranty and will cost you down time and money.

Copyright 8/07

SAFETY PROCEDURES

⚠ DANGER

DO NOT feed vines or vine-like material! DO NOT pile vines or vine-like material in front of the infeed hopper which may cause you to trip or fall! DO NOT allow vines or limbs to become entangled with you or your clothing! DO cut vine-like material into 4 to 5 foot (1.2 to 1.5 meter) length's, away from the chipper area! DO stop the feed system before feeding the cut vine-like material into the infeed hopper! DO use a wooden pusher paddle when feeding the cut vines into the feedwheel(s)! ALWAYS be in position and prepared to activate the feed control handle!

⚠ DANGER

DO NOT operate this machine indoors! Exhaust fumes can be fatal. Never refuel while the machine is running. Never refuel in the shop or building. Always refuel in a well ventilated area, away from sparks or open flames, DO NOT SMOKE. Extinguish all smoking materials. Wipe up all spilled fuel before restarting the engine. Do not fill above 1/2" (12.7mm) from top of tank.

To obtain the most from your machine, for the least amount of cost, it is a good practice to set up and follow a scheduled preventative maintenance program. It will eliminate many possible problems and down time.

⚠ WARNING

Never use jumper cables during freezing temperatures. Tow the machine inside and allow the battery time to warm up. If the machine must be started outside, inspect the battery acid for ice formation. Explosion will occur with a frozen battery. Never use jumper cables in a confined or unventilated area. Battery acid fumes are explosive. Never expose an open flame or spark near the battery.

⚠ DANGER

Before using the top feedwheel jack, if equipped, remove the yoke springs. Install the disc/drum lock pin in the mount tube before using hand jack to raise top feedwheel. Hand jack is only provided as a means of lifting the top feedwheel, not holding it up for service.

CALIFORNIA

Proposition 65 Warning

Diesel engine exhaust and some of its constituents are known to the State of California to cause cancer, birth defects, and other reproductive harm.

⚠ DANGER

Never feed any materials that might contain wires, stones, nails, metal objects, or any foreign object which may damage the knives and become dangerous projectiles.

⚠ DANGER

Before attempting any type of maintenance disengage clutch, turn off engine, wait for the chipper disc/drum to come to a complete stop, install the disc/drum lock pin, disconnect battery, and make sure the ignition key is in your possession.

ALWAYS install the disc/drum lock pin to prevent inadvertent rotation. On disc chippers insert lock pin through lock pin tube on the belly band under hood rest. On drum chippers insert lock pin through lock pin tube on side of drum housing.

Simply slide the lock pin into the disc/drum lock tube. This is to insure that the chipper disc/drum cannot be started while you are working inside the machine. If for some reason the chipper disc/drum would start to turn, it would simply hit the lock pin.

⚠ DANGER

DO NOT remove the hood pin until the chipper disc/drum has came to a complete stop. The chipper disc/drum will coast for several minutes after the engine is shut down. Always wait at least several minutes.

DO NOT operate this machine without the Hood Pin in place. Do not operate the machine with any type of makeshift hood pin or an improperly installed hood pin! The Hood Pin MUST be padlocked.

DO NOT operate the machine with the chipper hood open under any circumstances.

⚠ DANGER

The patented "Last Chance Stop" is a means of stopping/reversing the feedwheels if a negligent operator does not follow the safety rules and finds themselves in trouble! DO NOT RELY ON THE "LAST CHANCE STOP" TO DISOBEY THE OPERATOR RULES! The "Last Chance Stop" does nothing for the foolish operator who kicks into the infeed hopper area.

With engine shut off and all moving parts stopped, DAILY pull last chance cables to ensure they freely disengage and reverse feed wheel hydraulic valve.

Copyright 8/07

SAFETY PROCEDURES

⚠ WARNING

The machine was built with a chipper hood engine disable plug which disables the engine if it is not installed properly with the hood pin holding the chipper hood in the closed position. Correctly installed and maintained, the engine will not start or it will shut off if the chipper hood engine disable plug is disconnected. The chipper hood must NEVER be opened, or pushed closed if the chipper disc/drum is turning.

⚠ DANGER

DO NOT slam the chipper hood to the open position. This will cause damage to the hinge. If your hinge has become damaged by slamming the hood to the open position, Replace The Hinge Immediately! If the hinge has become damaged it will cause misalignment of the hood, the chipper disc/drum may then hit the hood and cause a serious accident! Lubricate the hood hinge daily.

⚠ DANGER

Do not work inside the mouth of the chipper or around the feedwheel(s), until you have installed the yoke lock pin completely and securely to help keep the top feedwheel in the raised position. Remove top wheel springs if equipped, block and chain top wheel up before doing any work inside throat.

⚠ DANGER

Do not work on the machine if the engine is running with the clutch disengaged. A clutch can self engage if either the pilot or throw-out bearing happens to seize to the main output shaft.

There are various types of clutches (PTO's) available for this type of equipment. Make sure to study the original clutch manufacturer's manual that is provided with the machine and follow its instructions for operation, service, and adjustments. Some styles require clutch engagement to be maintained so that it takes a lot of force, others will require very little force, and some are push button, electric, manual lever, or hydraulic activation. Each different style clutch (PTO) is a very expensive item that will fail if not correctly maintained and adjusted. It will be quite costly if a few minutes are not taken daily, weekly, and monthly to keep the clutch serviced as required.

The operator must take care in the engagement and disengagement of the clutch, engine RPM should always be below 1000 RPM. When the engine has sufficiently warmed up, bump the clutch handle against engagement to start the chipper disc/drum turning. This will have to be repeated until the chipper disc/drum is turning at proper ratio with engine RPM. Then push the handle all the way in gear until it locks into position securely. After engagement raise engine RPM to full throttle. Engaging and disengaging the clutch at high engine RPM will quickly and excessively wear out clutch plates as well as bearings. Refer to clutch manufacturer's manual for proper service and operation.

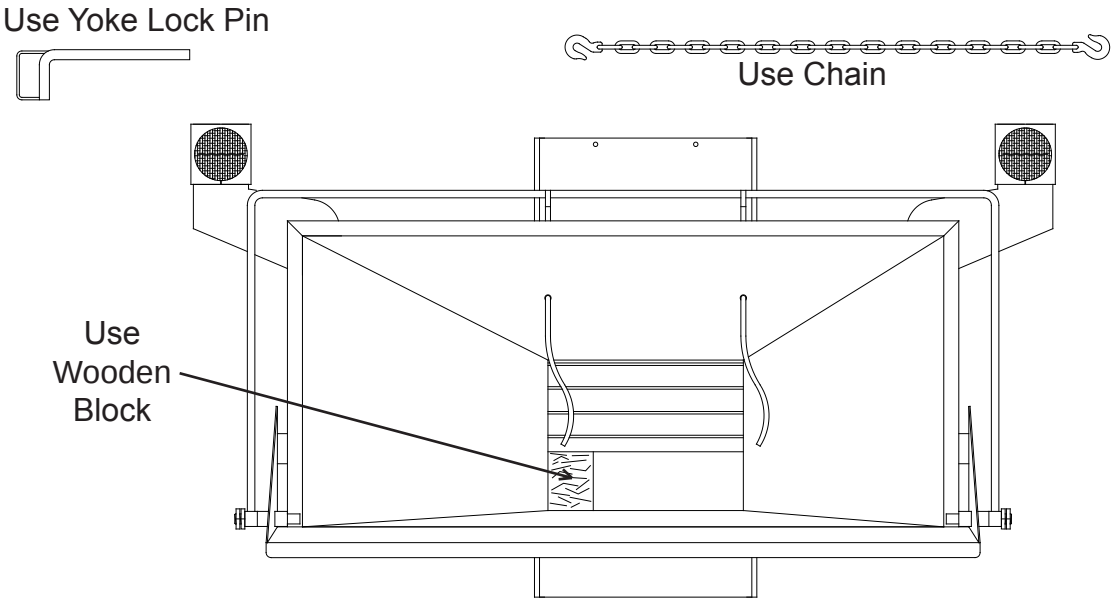

SAFETY PROCEDURES

⚠ WARNING

Always stand to the side of the infeed hopper when inserting material. This will allow you to turn away from the wood, and walk away, without passing through the material. Machines should be fed from curbside (right side) whenever possible. Anytime an operator is near the infeed hopper, they must be within easy reach of feed control devices.

To increase production, don't waste time watching the material being fed. Once the limbs have started into the machine, you can walk away and get more material.

Keep the feedwheel tension springs adjusted only tight enough to keep the feedwheel teeth from slipping on the material. DO NOT OVERTIGHTEN! This will overwork the hydraulic system, and make it difficult to feed larger material.

Always start the larger end (base end) of the log or branch into the feedwheel(s) first.

Keep the engine R.P.M.'s at full throttle whether you are chipping brush or round wood. Lower R.P.M.'s will cause weak throwing power, and can cause plugging in the discharge.

⚠ DANGER

Never turn the chipper disc/drum by hand, always carefully use a pry bar or wood bar. This will help prevent the person turning the disc/drum from being injured should the disc/drum break loose.

A sight hole in the chipper beltshield has been provided. If chipper belts are moving do not open chipper hood. Do not stick fingers in sight hole.

⚠ WARNING

It is very important after you have operated a new machine for approximately an hour to shut down the machine and recheck all hydraulic fittings. Retighten as needed.

DO NOT GO NEAR HYDRAULIC LEAKS! High pressure oil easily punctures skin causing serious injury, gangrene, or death. DO NOT use fingers or skin to check for leaks. Lower load or relieve hydraulic pressure before loosening fittings. Use a piece of cardboard to find leaks. Never use your bare hands.

In cold weather situations let your hydraulic system idle for approximately 15 minutes to allow the system to warm up to operating temperature.

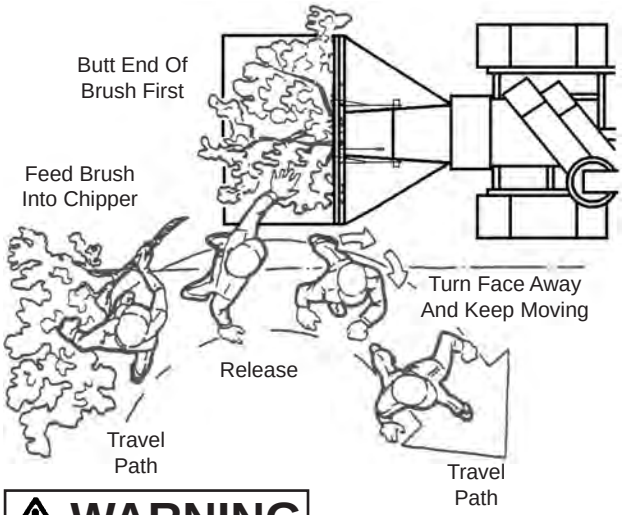

⚠ WARNING

Before you begin to transport your trailerized machine follow all of the transportation procedures on pages 34-36. Make sure that the tongue has been raised to the proper height and attach the machine securely to the towing vehicle. Once secured to vehicle, locate tongue jack and secure it in the transport position. Always hook safety chains to vehicle by crossing them under the tongue allowing enough slack to avoid binding or dragging the ground when making turns. Check brakes and highway lights make sure that they are all operating properly. Check that the plug terminal functions match the towing vehicle for proper operation. Make sure that the discharge chute is in the transport position pointed over the tongue of machine and the transport bolt is securely in its place. Be sure to check tire pressure before you begin to transport the machine. Close the folding pan, if equipped for the infeed hopper and make sure spring latches are locked into place. If machine is equipped with a vise, make sure to secure in place and clamp jaws closed. Close and secure any of the following, if equipped: tool box, battery box, engine cowl doors and side panels, radiator debris screens, inspection doors, cabinet doors, housing covers, tank caps and covers, etc.

⚠ DANGER

Chipper knives are sharp and can be dangerous. It is always necessary for your protection to be extra careful and wear leather gloves when handling knives.

⚠ DANGER

The knives must be securely fastened and torqued in position. If one comes loose or breaks during operation, someone or something may get injured.

SAFETY PROCEDURES

IF MACHINE IS EQUIPPED WITH UNDERCARRIAGE TRACK

Machines equipped with undercarriage tracks are shipped with a manual from the track manufacturer. Refer to it for service, operation, and safety information.

⚠ WARNING

Do not attempt to operate the track machine on an ascending or descending slope of more than 25° or 46% or a side slope of more than 17° or 30%, it is Dangerous and could be Fatal. This is the maximum slope grade the machine can be operated on if the hydraulics, tracks, and engine are running at maximum performance and the tracks sustain good traction.

Maximum Slope Grade

Ascending or Descending Slope

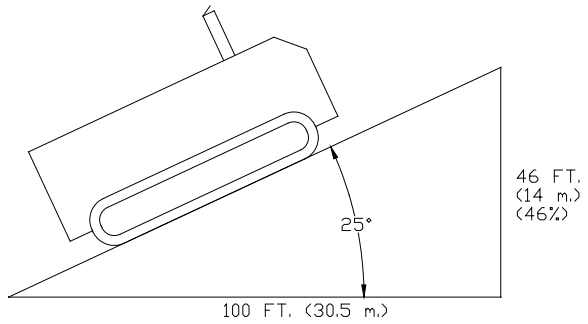

Side Slope

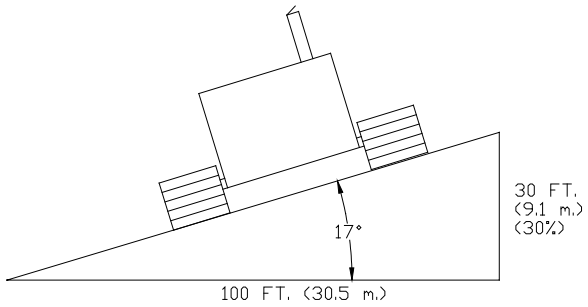

Diagram shows percentage to degree of slope.
Percentage is in vertical feet for every 100 horizontal feet.

⚠ WARNING

Any increase from the specified maximum operating angles may cause loss of lubrication function and damage the engine.

⚠ DANGER

The track machine should never be parked on a slope at any time. The machine can coast or creep causing equipment and/or personal injury.

⚠ DANGER

Make sure everyone is clear of machine before moving the track machine. Stay clear of tracks when the machine is moving.

⚠ DANGER

DO NOT entangle feet or hands in undercarriage travel system.

⚠ DANGER

Use **EXTREME CAUTION** when traveling over non-level surface! This machine can tip over or tip backwards on non-level surface. You will cause engine damage, machine damage and possible personal injury!

⚠ DANGER

NEVER sit, stand, lay, climb or ride anywhere on this machine while it is running, operating, or in transit. You will be injured.

EQUIPMENT SPECIFICATIONS

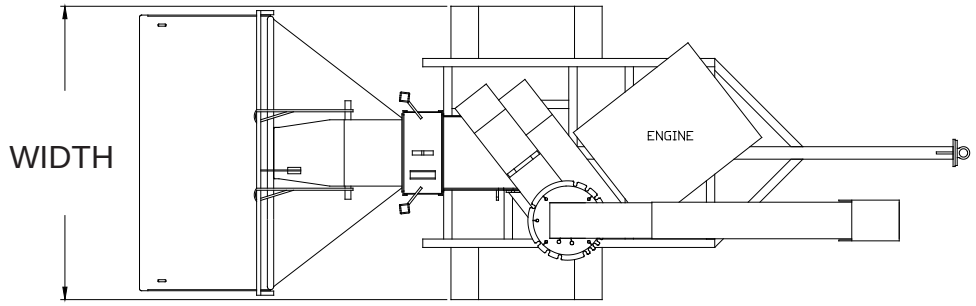

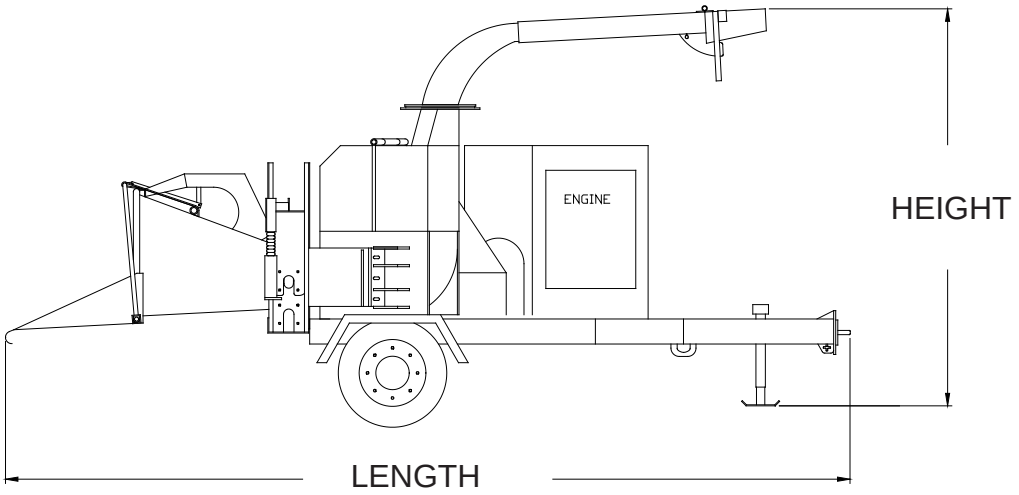

Approximate Dimensions & Weights

(Dimensions & weights will vary depending on optional equipment)

Approx. Weight:	Model 250:	6400 to 6800 lbs. (2903 to 3084 kg)
	Model 254:	7700 to 8000 lbs. (3493 to 3629 kg)

(Approximate weights depending on engine and equipment options.)

Overall Dimension:	Model 250:	Height: 8’ 7” (2.6 m),	Length: 17’ 9” (5.4 m),	Width: 6’ 9” (2.1 m)
	Model 254:	Height: 8’ 10” (2.7 m),	Length: 17’ 9” (5.4 m),	Width: 7’ (2.1 m)

	Model 250	Model 254
Fuel Tank Capacity:	40 Gallons (151 Liters)	40 Gallons (151 Liters)
Hydraulic Tank Capacity:	13 Gallons (49 Liters)	13 Gallons (49 Liters)

(Approximate dimension depending on equipment options.)

Copyright 8/07

EQUIPMENT SPECIFICATIONS

TRAILERIZED

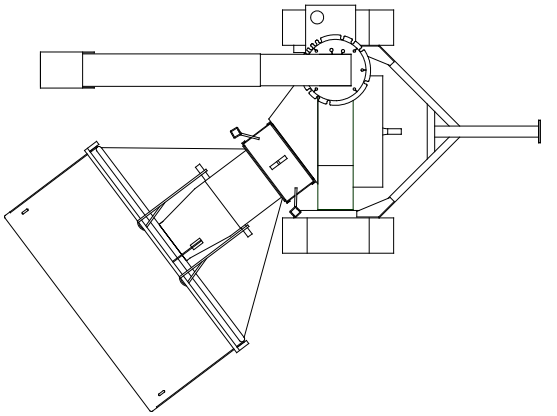

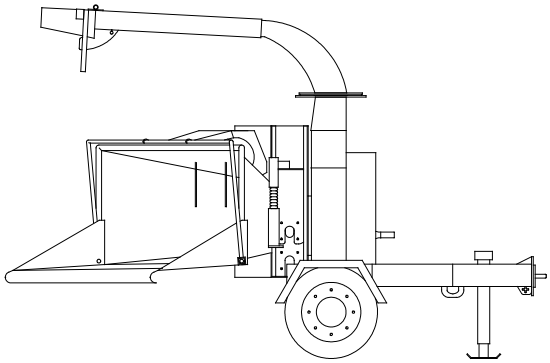

3-POINT

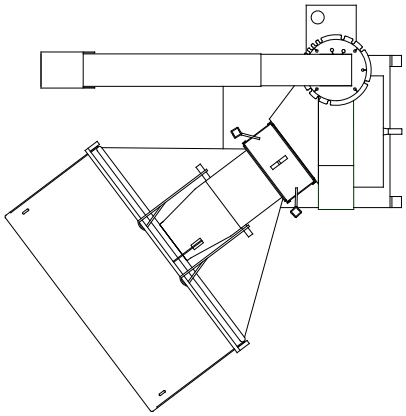

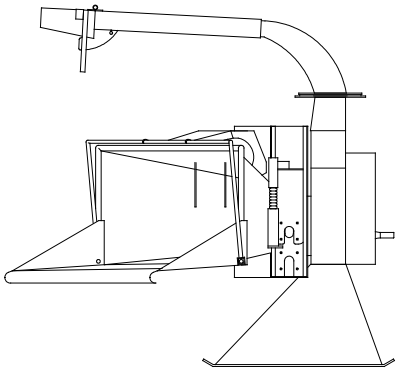

Approximate Dimensions & Weights

(Dimensions & weights will vary depending on optional equipment)

Approx. Weight:	Model 250 PTO 3-POINT:	3800 to 4500 lbs. (1723 to 2041 kg)
	Model 250 PTO TRAILERIZED:	4000 to 4500 lbs. (1814 to 2041 kg)

(Approximate weights depending on engine and equipment options.)

Overall Dimension:	Model 250 PTO 3-POINT:	Height: 8’ 7” (2.6 m),	Length: 8’ 2” (2.5 m),	Width: 7’ 7” (2.3 m)
	Model 250 PTO TRAILERIZED:	Height: 8’ 2” (2.5 m),	Length: 13’ 5” (4.1 m),	Width: 8’ 4” (2.5 m)

	Model 250 PTO
Hydraulic Tank Capacity:	12 Gallons (45 Liters)

(Approximate dimension depending on equipment options.)

Copyright 8/07

DECALS

WARNING

WEAR EYE & PERSONAL PROTECTION EQUIPMENT

Wear all personal protection equipment and follow all safety standards per ANSI and OSHA instructions.

DANGER

DO NOT feed vine-like material into this machine unless you follow the rules:
Do Not allow vine-like material to lay in front of infeed hopper!
DO NOT allow vine-like material to trip or entangle with you or your clothing. Can cause severe injury!
MUST cut vine-like material into 4 to 5 foot pieces!
MUST stop the chipper feed system and feed the shortened pieces with the wooden push paddle!
MUST always be positioned and prepared to activate feed control handle!

DECAL LOCATIONS - MODELS 250/254

Decal locations may vary, these are general locations.

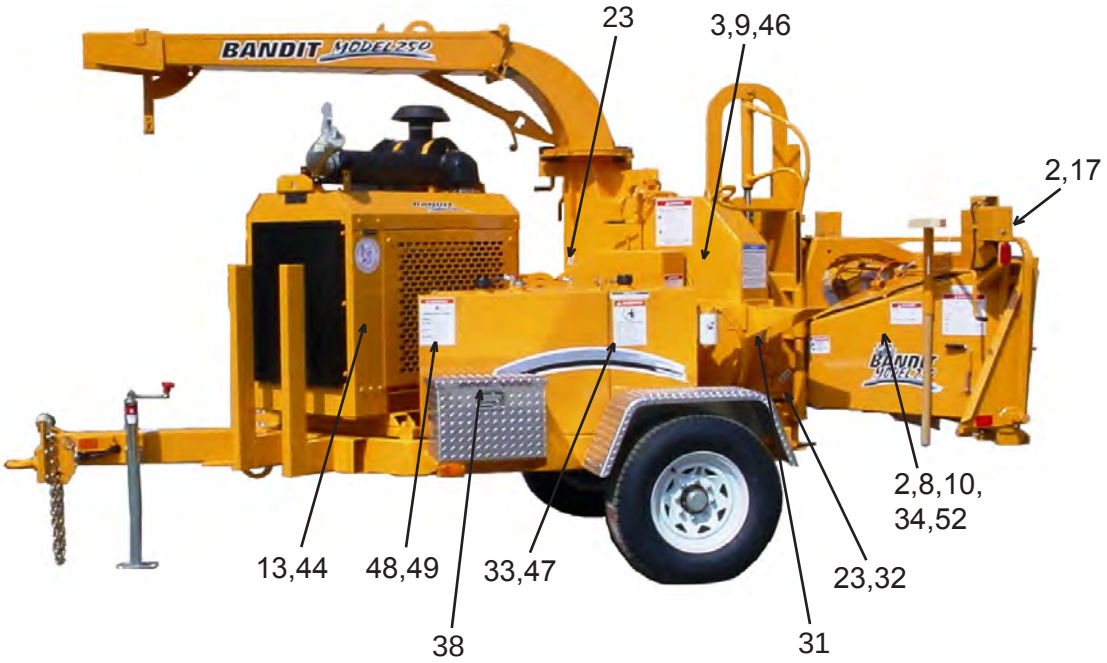

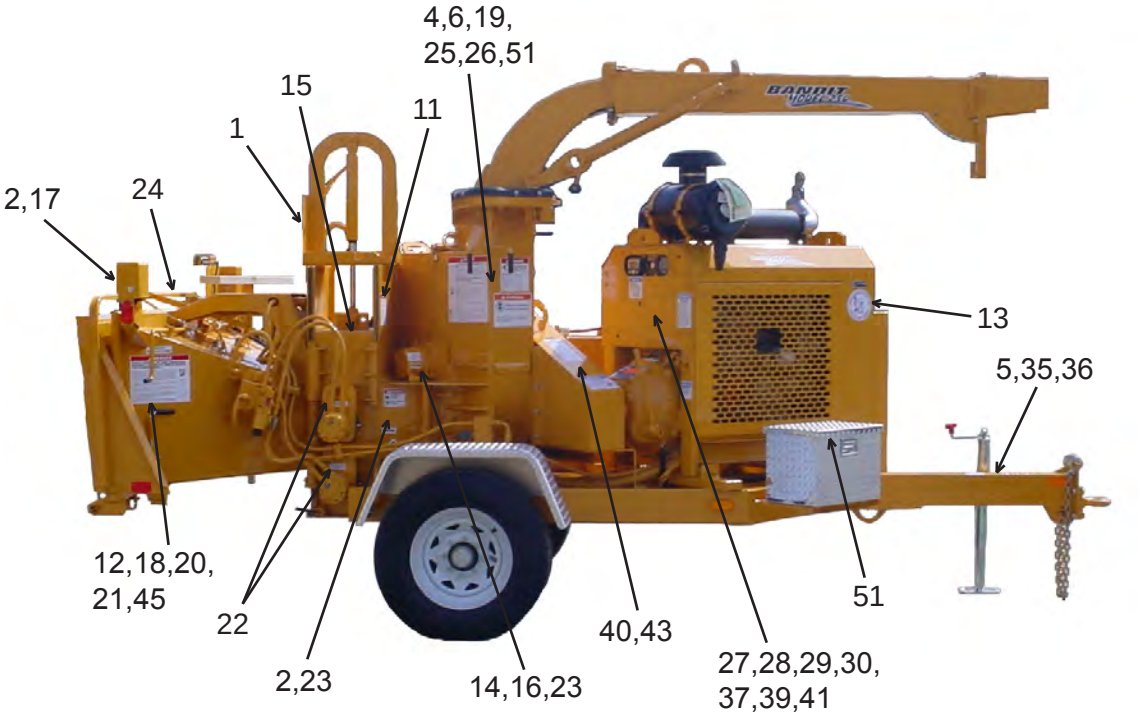

DECAL LOCATIONS - MODELS 250/254

Modifications and/or additions of decals to this list will happen.
Consult chipper dealer or manufacturer for most current decal package.

LOCATION	NUMBER	DESCRIPTION
1.	SPD-01	Avoid Injury Or Death...
2.	SPD-02	Moving Parts...
3.	SPD-03	Lockout All Energy Sources...
4.	SPD-04	Flying Discharge Material...
5.	SPD-05	Log Splitter...
6.	SPD-07	Last Chance Stop Cables...
7.	SPD-09	Do Not Work Under Top Feed...
8.	SPD-12	Do Not Feed Vine-Like...
9.	SPD-28	Do Not Insert Fingers
10.	SPD-30	Do Not Sit, Stand, Lay, Climb...
11.	SPD-33	Do Not Work Under...
12.	SPD-34	Brush Chippers Are Very Dangerous...
13.	ID-42	Bandit Industries Inc...USA
14.	INST-01	Remove To Check Torque...
15.	INST-02	Yoke Lock Hole
16.	INST-03	Yoke Lock Bar
17.	INST-04	Arrow
18.	INST-05	Yoke Lift Up / Down
19.	INST-07	Discharge Swivel Right / Left
20.	INST-08	Winch Control Out / In
21.	INST-09	Selector Winch / Feed
22.	INST-11	Motor Coupler Guard...
23.	INST-12	Grease Daily (Arrow)
24.	SPINST-13	Push To Reverse
25.	INST-14	Articulating Tongue In / Out
26.	INST-15	Flipper Down / Up
27.	INST-16	Grease Weekly Arrow
28.	INST-39	Oil Daily Arrow
29.	INST-44	California Proposition 65
30.	INST-46	Autofeed Basic Info...
31.	INST-48	Disc/Drum Lock Tube
32.	INST-49	Disc/Drum Lock Pin
33.	INST-53	Hydraulic Oil...Hydrex XV...
34.	INST-76	Yoke Lift Down / Up
35.	INST-90	Tongue Up / Down
36.	INST-95	Electric Plug-In Schematic
37.	INST-101	Canada Engine Decal
38.	INST-109	Basic Maintenance Check List

Note: Some decals are for optional equipment. Decal locations may vary, these are general locations. If any decals become damaged, replace immediately.

DECAL LOCATIONS - MODELS 250/254

Decal locations may vary, these are general locations.

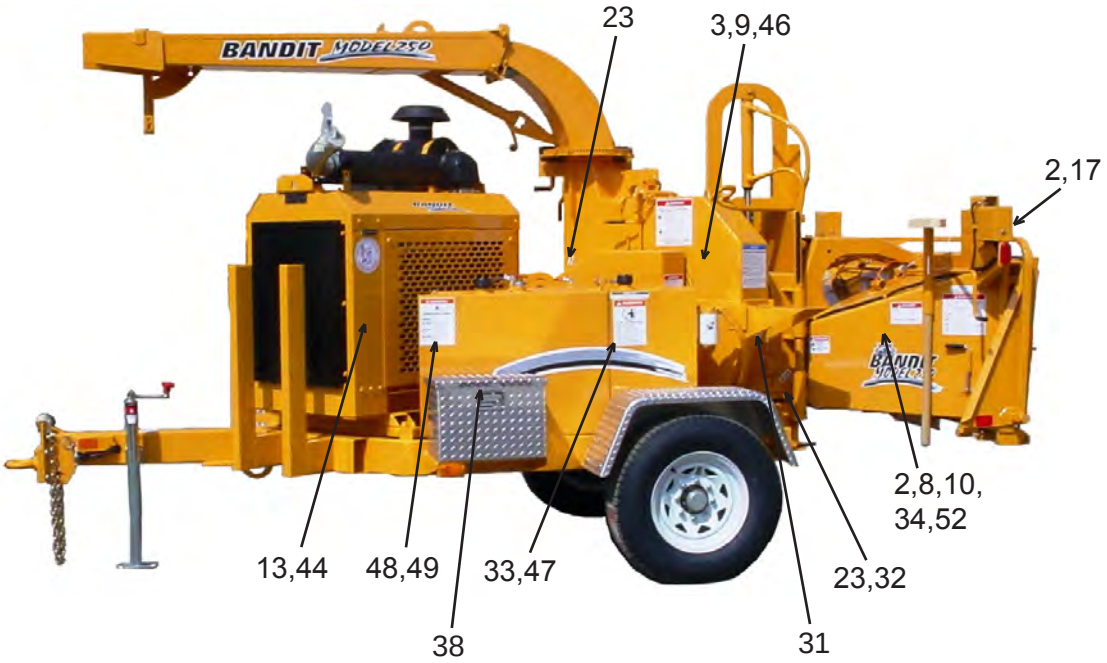

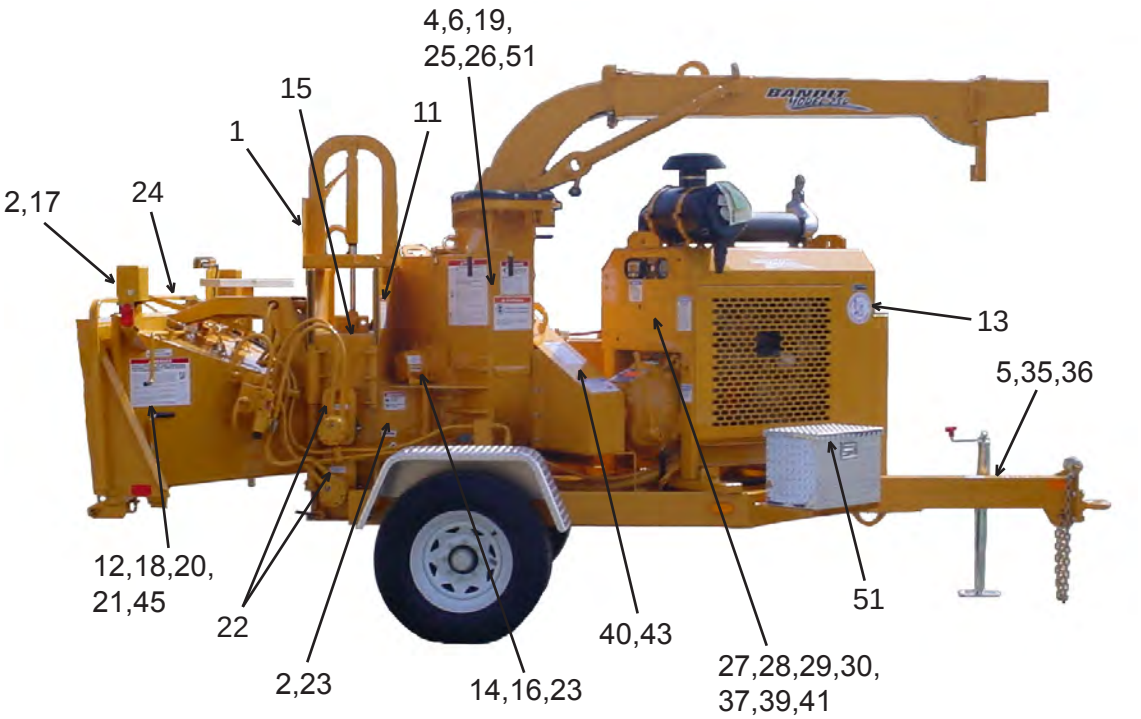

DECAL LOCATIONS - MODELS 250/254

Modifications and/or additions of decals to this list will happen.
Consult chipper dealer or manufacturer for most current decal package.

LOCATION	NUMBER	DESCRIPTION
39.	N-02	Maintain Lubrication...
40.	N-03	Service Required Under Beltshield...
41.	N-05	Frequently Adjust...PTO...
42.	SPN-06	Decal Maintenance...
43.	N-07	Clutch Operation...
44.	N-08	Patents...
45.	N-09	Adjustable Feed Speed...
46.	SPN-11	Correct Knife And Hardware...
47.	SPW-01	Do Not Go Near Oil Leaks...
48.	SPW-02	Diesel Fuel Only...
49.	SPW-03	Gasoline Fuel Only...
50.	SPW-04	Frozen Battery Can Explode...
51.	SPW-08	Wear Personal Protection...
52.	SPW-10	Hydraulic Winch...
53.		Bandit Model 250 Vinyl Decals
54.		Bandit Model 254 Vinyl Decals

Additional Decals for Machine Equipped With A Loader - Consult dealer or manufacturer for general locations.

55.	SPD-15	Do Not Operate Loader Arm...
56.	SPD-16	Do Not Hand Feed...
57.	INST-32	Joystick Controls
58.	INST-58	Wood Assist Loader...
59.	INST-110	Window Washing Instructions...
60.	INST-125	Selector Winch / Feed
61.	INST-126	Winch Out / In
62.	N-10	Always Fold Loader...

Additional Decals for Machine Equipped With A Track Undercarriage - Consult dealer or manufacturer for general locations.

63.	SPD-19	...Minimum 10 Feet Away From Tracks...
64.	SPD-38	Do Not Entangle Feet...
65.	INST-127	Selector Winch / Track
66.	SPW-06	Do Not Attempt...Slope Of More Than...
67.	SPW-07	Do Not Move Machine...Horn Is Blown...
68.	SPW-11	Do Not Leave Unit Parked On A Slope...
59.		Bandit Track Vinyl Decals

Note: Some decals are for optional equipment. Decal locations may vary, these are general locations. If any decals become damaged, replace immediately.

Copyright 8/07

DECALS

Decals located on your Bandit equipment contain useful information to assist you in operating your equipment safely. Some of the decals on your machine and their location are shown in this section.

It is very important that all decals remain in place and in good condition on your machine. Please follow the care and instructions given below:

1) You should use soap and water to keep your decals clean. Never use mineral spirits or any other abrasive cleaners.
2) Replace immediately any missing or damaged decals. The location the decal is going to be applied to must be clean and dry, and at least 40° F (5°C) before applying decal.
3) When the need arises to replace a machine component with a decal attached, be sure and replace the decal.
4) Replacement decals are available, and can be purchased from the manufacturer or your Bandit Dealer.
5) Combination English / Spanish decals are typically standard. Other foreign language decals are available and may be purchased. Mail translated decals required to Bandit Industries, Inc.

EXAMPLES:

NOTICE

DECAL MAINTENANCE IS THE RESPONSIBILITY OF THE OWNER OF THIS MACHINE. KEEP DECALS LEGIBLE. DECALS (ETC.) ARE AVAILABLE IN OTHER LANGUAGES.

CONTACT: PARTS DEPARTMENT
6750 MILLBROOK RD.
REMUS, MI 49340
PHONE (888) 748-6348

NOTICE

THE CLUTCH HANDLE SHOULD NOT BE ENGAGED OR DISENGAGED AT SPEEDS ABOVE 1000 RPM'S.

DO NOT operate this Clutch/PTO unless proper adjustments and lubrication are maintained per the Clutch/PTO Manufacturer's Manual. Different brands and models require different service and operation procedures. New Clutch/PTO's require more frequent adjustment.

GOOD OPERATORS DON'T WASTE MONEY!

Clutches will fail, glaze over, and burn up from improper adjustment. This will cost the owner of this machine thousands of dollars to repair. A well maintained, correctly adjusted clutch should function properly for years.

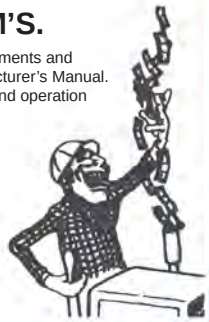

⚠ DANGER

DO NOT insert fingers or amputation could occur.

DO NOT perform any maintenance until belts inside this hole have completely stopped moving.

⚠ DANGER

DO NOT sit, stand, lay, climb or ride anywhere on this machine while it is running, operating or in transit.

YOU WILL BE INJURED!

⚠ DANGER

AVOID INJURY OR DEATH!

DO NOT OPERATE THIS MACHINE UNLESS:

- Only properly and fully trained people are used.
- Wearing clothing and personal protective equipment per ANSI Z133 and OSHA 29-1910 standards.
- Constantly prepared and positioned to activate the feed control bar.
- All guards and covers are secure and in place.
- Only factory approved pins, guards and replacement parts are used.
- All safety devices and controls are operational.
- Never allow hand, foot or body part to enter infeed hopper during operation or while running.
- All decals are legible, in place and operator thoroughly understands them.
- Never open chipper hood cover while disc/drum is turning or engine is running.

Follow all safety and operational instructions per manuals decals, video, ANSI Z133 and OSHA 29-1910 standards.

⚠ WARNING

DO NOT GO NEAR LEAKS!

- **Pressured oil easily punctures skin causing injury, gangrene or death.**
- **Seek immediate medical care.**
- **Do not use finger or skin to check for leaks.**
- **Remove hydraulic pressure or load before loosening fittings.**

Copyright 8/07

⚠ DANGER

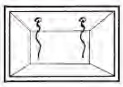

LAST CHANCE STOP CABLES FOR EMERGENCY USE ONLY!

Any Contact with infeed rollers will cause serious injury or death. The "Last Chance Stop" is a means of stopping/reversing the feed rollers if a negligent operator doesn't follow the safety rules and finds themself in trouble!

DO NOT RELY ON THE "LAST CHANCE STOP" TO DISOBEY OPERATOR RULES!!

"Reaching in" is usually associated with trying to hand feed small wood debris into the feed rollers.

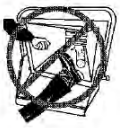

DO NOT reach or kick into infeed hopper for any reason!

DO NOT hand feed small wood debris into feed rollers!

DO feed small wood debris with wooden push paddle, or throw material on top of big wood as it feeds!

DO always be positioned and prepared to activate forward-off-reverse control bar!

DO always follow operation and safety instructions! (ANSI, OSHA and manufacturer)

DO NOT REACH IN!

DO NOT operate this machine unless you have read the operators manual, read decals, watched video tape and have been thoroughly trained for safe operating procedures!

The "Last Chance Stop" does nothing for the foolish operator that kicks material into the infeed hopper. This can cause loss of foot, leg or death. Don't kick into infeed!

⚠ DANGER

BRUSH CHIPPERS ARE VERY DANGEROUS MACHINES TO OPERATE! READ & BELIEVE THIS WARNING DECAL!

The chipper feedrolls are VERY DANGEROUS. They are designed to pull large diameter trees of any length into the chipper. Pulling your hand, arm, foot or entire body through the machine is much easier than pulling a tree. FOLLOW the operating instructions in the operator's manual, and ALWAYS be in a position to activate the *Forward-Off-Reverse Control Bar*. NEVER take chances pushing wood too far into the infeed hopper of the chipper. NEVER use your feet to try to kick wood into the machine. There have been ACCIDENTS involving the feed rolls, resulting in the amputation of hands, arms, feet, legs and DEATH. DO NOT let this happen to you!

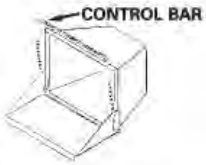

DO NOT open the chipper hood without letting the chipper disc come to a complete stop. THIS MEANS A COMPLETE STOP - NOT ALMOST! WAIT at least 3 minutes before disengaging the hood lock pin.

NEVER operate the chipper without the hood lock pin SECURELY installed and the hood lock pin padlock LOCKED. Failure to do this will allow the chipper hood to slam to the open position and possibly injure someone.

There have been ACCIDENTS, all of them were SERIOUS INJURIES or DEATH involved with chipper hoods flying open and hitting someone. In ALL of the cases the hood lock pin was NOT INSTALLED PROPERLY. DO NOT operate this chipper if the hood lock pin is not LOCKED INTO POSITION.

DO NOT OPERATE THIS MACHINE UNLESS YOU HAVE READ THE OPERATOR'S MANUAL AND HAVE BEEN TRAINED FOR SAFE OPERATING PROCEDURES!

AUTOFEED OPTIONS

AUTOFEED SYSTEM

Consult the original manufacturer's manual for your chippers
Autofeed operating and maintenance procedures

When processing material through the chipper, the feed system will automatically stop when the engine drops below a preset RPM point. The engine is constantly being monitored by an adjustable electronic speed switch. The switch can be adjusted so that at a given RPM, an electronic relay system will operate the hydraulic solenoid valves to stop the feedwheels until the engine has recovered speed. The patented "Autofeed Plus" system will reverse the feedwheels for a set period of time and then stop until the engine has recovered speed. Both autofeed systems will then automatically turn the feed on to resume forward travel.

Due to required components and equipment options a machine may have various types or brands of autofeed systems. Each chipper is shipped with the original manufacturer's manual for the autofeed system it is equipped with.

For the approximate autofeed settings on all optional autofeed systems refer to page 26 of the chipper manual. For part numbers on the hydraulic portion of the autofeed systems refer to pages 116 & 117 of the chipper manual.

Do not power wash the digital tach hour meters. Pressure causes unwarranted damage. **Do not spray tach, this will void warranty.**

PART NUMBERS FOR AUTOFEED DIGITAL TACH HOUR METERS	
ESI Intelli-Feed Part Number: 900-2908-11 For Service Call 1-815-985-0383 	Electronic Solutions Part Number: 900-2904-85 For Service Call 1-866-736-6839 No longer used.
L.O.R. MFG. Part Number: 900-2906-82L For Service Call 1-866-644-8622 	Miratron Inc. Part Number: 900-2910-68 For Service Call 1-866-285-0132 No longer used.

AUTOFEED TERMINOLOGY

PPR Pulses per revolution. On magnetic pick-up machines, this setting will be the number of teeth on the gear or sprocket it is reading. On alternator pick-up machines, the setting will need to be obtained from your local dealer or Bandit Industries.

Mag Pick-up Magnetic pick-up, also called pick-up probe. This is normally located screwed into the flywheel housing on the engine block. It can also be found on the clutch housing or chipper shaft. See Figure 1.

Dump Block This block is used in most cases. It is located near the fender on the frame of the chipper. Easy way to find it is by following the hydraulic hose from the pump. The block will be the first thing it is hooked into. This block also contains the main relief. When the solenoid is activated (indicated by the light in the connector) the feedwheel(s) are stopped by the autofeed system. See Figure 2.

Reverse Valve Located on the infeed hopper of the chipper. It can be recognized by a valve with one solenoid bolted on a square block. The solenoid is approximately 2-1/2" (63.5mm) diameter x 2-3/4" (69.9mm) long. It will have two wires coming from it or on the newer machines it will have a connector with a light screwed to it. When the solenoid is activated (indicated by the light in the connector) the feedwheel(s) are reversed by the autofeed plus system. See Figure 3.

Dual Coil Reverse Valve Normally seen on bigger machines such as 280, 1850, 1890, 1990, 2090, etc. and special options. This will normally be located on the infeed hopper of the machine. It can recognized by a valve with two solenoids bolted on a square block. The solenoid is approximately 2-1/2" (63.5mm) diameter x 2-3/4" (69.9mm) long. It will have two wires coming from it or on the newer machines it will have a connector with a light screwed to it. The feed coil must have power (indicated by the light in the connector) for the feedwheels to feed and pull material in. See Figure 4.

Solenoid Electronically activated to produce a magnetic pull which shifts the spool inside the hydraulic valve. Shifting of the spool changes oil flow direction from operating forward or dumping oil to tank.

High High or HI is the setting when the feedwheels will turn back on (feeding operation).

Low Low or LO is the setting when the autofeed will reverse (if equipped) the feedwheels and then turn the feedwheels off.

Back Amount of time in seconds the feedwheels will back the wood away from the cutter disc/drum. Normally this will be set at .3 seconds.

Figure 1

Figure 2

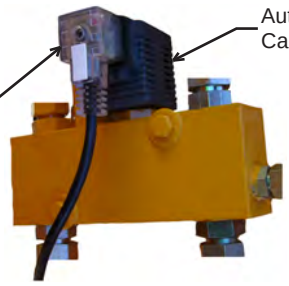

Figure 3

Figure 4

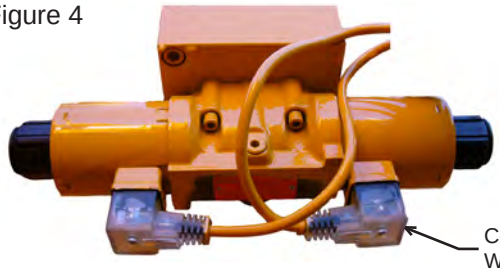

TROUBLE SHOOTING GUIDE

PROBLEM	POSSIBLE CAUSE	SOLUTION
No Display	-Gauge not getting power.	-Check continuity of Red wire to a clean power source. -Check 7.5 amp fuse. -Check connection at engine disable plug at hood pin. -Check key switch for switched power in and out.
	-Gauge not properly grounded.	-Check continuity of Black wire to ground connection.
	-Dead Battery.	-Charge or replace.
Feedwheels Do Not Stop (Autofeed Doesn't Activate)	-Loose chipper belts.	-Tighten or replace per manual specifications.
	-Clutch slipping.	-Adjust per clutch manufacturer's recommendations.
	-Sticky dump cartridge.	-Lightly tap on dump block to free up. -Take cartridge out and clean free of debris. -Replace solenoid and/or cartridge.
	-No power to dump valve solenoid.	-Check fuse on dump valve signal wire (if equipped). -Check continuity on the dump valve wire (normally green wire).
	-Faulty tach.	-Check autofeed tachometer settings.
	-Low or "LO" setting wrong.	-Check autofeed tachometer settings.
Feedwheels Do Not Re-engage	-Engine RPM not reaching HI set point on tach.	-Check for stretched or out of adjustment throttle cable. This would not engine reach full RPM. -Check HI RPM setting on gauge to make sure it is not set too close to full RPM of engine. HI setting should be 150 to 200 RPM below full engine RPM.
	-Sticky dump cartridge.	-Lightly tap on dump block to free up. -Take cartridge out and clean free of debris. -Replace solenoid and/or cartridge.
	-System pressure.	-Check and readjust per manual specifications.
	-Faulty tach.	-Consult local dealer or Bandit Industries.
No Signal	-Engine not running.	-Normal operating condition.
	-Bad signal wire.	-Check continuity on the signal wire (white wire in autofeed harness).
	-No signal from alternator.	-Check for at least 3.5 VAC output at idle and 10-12 VAC at HI RPM.
	-No signal from mag pick-up.	-Check for approx. 2-7 VAC at idle and approx. 14-20 VAC at HI RPM. Testing must be done at the two wires coming out of mag pick-up after disconnecting. Remove and clean off magnet at end. Reinstall by turning it in until it bottoms out. Then back off approx. 1/2 a turn. Lock with jam nut.
	-Bad mag pick-up.	-Replace mag pick-up.
Gauge Jumped Program	-Low voltage to tach.	-Check engine disable plug at hood. Clean and check for tight connection. Re-install using dielectric grease.
	-Shorts in wire harness.	-Check for possible worn wires or loose connections.
	-Faulty ground.	-Check black wire for a good ground.
	-Faulty tach.	-Consult local dealer or Bandit Industries.

TROUBLE SHOOTING GUIDE cont.

PROBLEM	POSSIBLE CAUSE	SOLUTION
Feedwheels Run In Reverse From Normal	-Backup time set wrong.	Reset backup time. Normal setting is .3 seconds.
	-Sticking reverse valve.	-Check solenoid operation. -Override cartridge manually by sticking a small allen wrench in the end of the solenoid. -Replace solenoid and/or cartridge.
	-Type settings programmed wrong.	-Reprogram or consult local dealer or Bandit Ind.

NOTE: Autofeeds with dump blocks can be unplugged and run manually. Autofeeds with dual output block will need a jumper plug. This can be a good test to determine if you problem is hydraulic or electronic.

LOR Jumper Plug
Part No.: 900-2913-51

ESI Jumper Plug
Part No.: 900-2914-09

APPROXIMATE DIGITAL AUTOFEED SETTINGS
(FOR ALL AUTO FEED SYSTEMS - REFERENCE ONLY)

NOTE: Refer to the Completion/Check Sheet, that is shipped with the machine for the correct engine rpm. If needed, contact your local dealer or Bandit Industries.

Some Current Engine Types	Maximum RPM	Alternator PPR	Magnetic Pick-Up PPR	Off RPM	On RPM	ALR (LOR only)	Feed Reverse Time
CAT 3054 / Perkins 1104C - 86 Hp	2500	N/A	126	2400	2150	N/A	.3
CAT 3054 / Perkins 1104C - 115 Hp	2425	N/A	126	2300	2050	N/A	.3
CAT 3054 / Perkins 1104C - 130 Hp	2380	N/A	126	2280	2030	N/A	.3
CAT 3054 / Perkins 1104C - 140 Hp	2380	N/A	126	2280	2030	N/A	.3
CAT 3056 / Perkins 1106C - 180 Hp	2525	N/A	126	2400	2150	N/A	.3
CAT C6.6L / Perkins 1106D - 213 Hp	2400	N/A	126	2250	2050	N/A	.3
Cummins B3.3 - 65 Hp	2500	N/A	110	2400	2150	N/A	.3
Cummins B3.3 - 85 Hp	2500	N/A	127	2350	2150	N/A	.3
Cummins B3.9 - 110, 130 Hp	2500	N/A	159	2350	2150	N/A	.3
Cummins B3.9 - 125 Hp	2450	N/A	159	2350	2150	N/A	.3
Cummins B5.9 - 173 Hp	2500	N/A	159	2350	2150	N/A	.3
Cummins QSB5.9 - 205 Hp	2500	N/A	159	2350	2150	N/A	.3
Deutz 66, 88 Hp	2800	12.5	N/A	2650	2400	50	.3
John Deere 5030 - 75, 84 Hp	2800	N/A	30	2650	2400	N/A	.3
John Deere 4045 - 80, 100 Hp	2500	N/A	30	2350	2150	N/A	.3
John Deere 4045 - 115 Hp	2500	N/A	129	2350	2150	N/A	.3
John Deere 4045 - 125, 140 Hp	2400	N/A	129	2250	2050	N/A	.3
John Deere 6068 - 155, 170 Hp	2500	N/A	129	2400	2150	N/A	.3
John Deere 6068 - 185, 200 Hp	2400	N/A	129	2250	2050	N/A	.3
Kubota 73, 90 Hp	2600	12.5	N/A	2450	2200	N/A	.3
Some Prior Engine Types							
CAT / Perkins 125 Hp - Tier 1	2400	17	126	2250	2050	10	.3
CAT / Perkins 115 Hp - Tier 1	2500	16	126	2350	2150	50	.3
Cummins 4B, 6B - 80 to 200 Hp	2500	17	159	2400	2150	N/A	.3
Ford 4 Cyl. - 70 Hp	2800	14	N/A	2650	2400	50	.3
Ford 6 Cyl. - 119 Hp	2800	15	N/A	2650	2400	30	.3

Copyright 8/07

CONTROLS

CORRECT OPERATION OF FEED CONTROL HANDLE

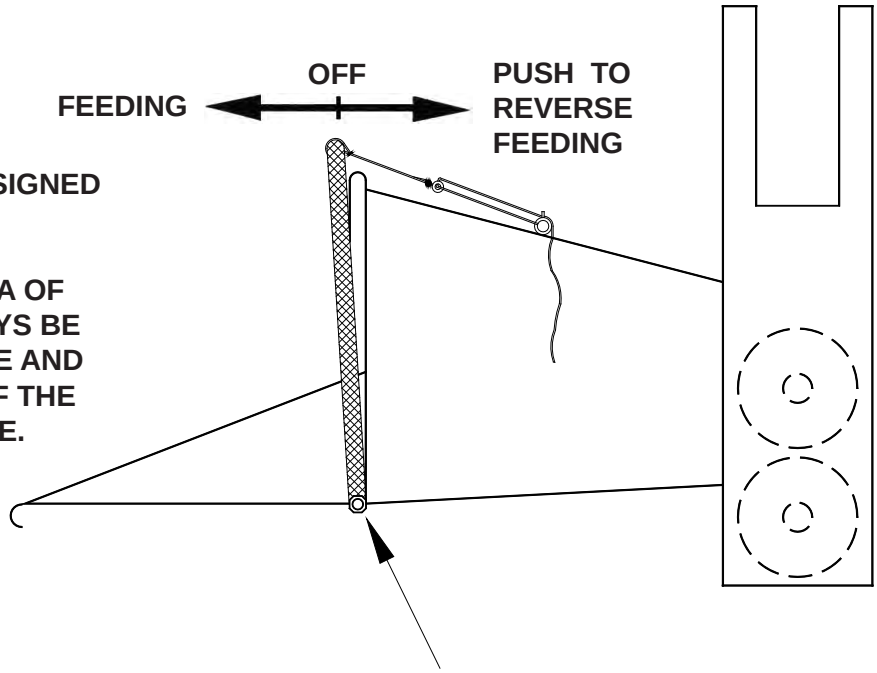

FOR ALL CHIPPERS DESIGNED TO BE "HAND FED".

IF YOU ARE IN THE AREA OF INFEED HOPPER, ALWAYS BE PREPARED TO OPERATE AND WITHIN EASY REACH OF THE FEED CONTROL HANDLE.

USE THE 1" JAM NUT TO ADJUST CONTROL HANDLE PIVOT TENSION.

ADJUSTING TENSION FOR CONTROL HANDLE PIVOT AND LAST CHANCE CABLE PULL.

NORMAL WEAR REQUIRES PERIODICAL ADJUSTMENT OF PIVOT TENSION.

FEED CONTROL HANDLE SHOULD PIVOT WITH LITTLE EFFORT, BY HAND OR WITH A PULL ON "LAST CHANCE" CABLES. LUBRICATE PIVOT POINTS OF FEED CONTROL HANDLE WEEKLY.

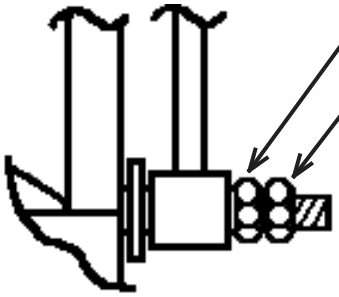

ADJUST PIVOT TENSION WITH THE TIGHTNESS OF INSIDE FRICTION NUTS.

SECURE ADJUSTMENT WITH OUTSIDE JAM NUTS.

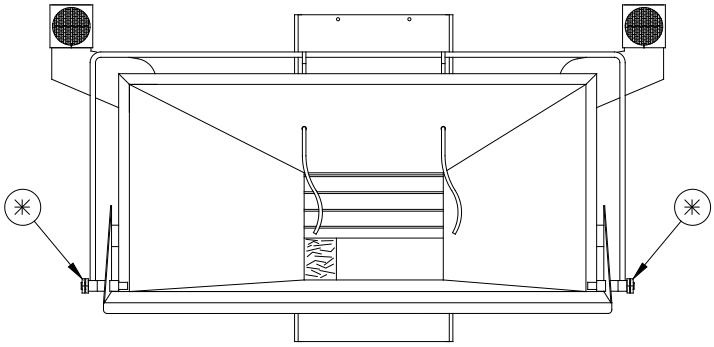

Copyright 8/07

CONTROLS

Models 250/254 Basic Location of Controls and Adjustments

LOCATION SHOWN

1. Foot Pad Jack
2. Clutch Handle
3. Chipper Belts / Pump Belts
4. Lug Nuts
5. Feedwheel Motor Coupler
6. Infeed Hopper
7. Folding Infeed Pan
8. Feedwheel Control Bar
9. Hydraulic Control Valves
10. Wooden Push Paddle
11. Yoke Lift Cylinder
12. Swivel Discharge “Optional”
13. Adjustable Height Discharge “Optional”
14. Discharge Chute
15. Discharge Flipper Adjuster
16. Engine Controls, Adjusters
17. Engine Throttle Adjuster
18. Autofeed Controls “Optional”

NOT SHOWN

Knives & Hardware
Hydraulic Winch “Optional”
“Bandit” Lever Throttle Adjuster

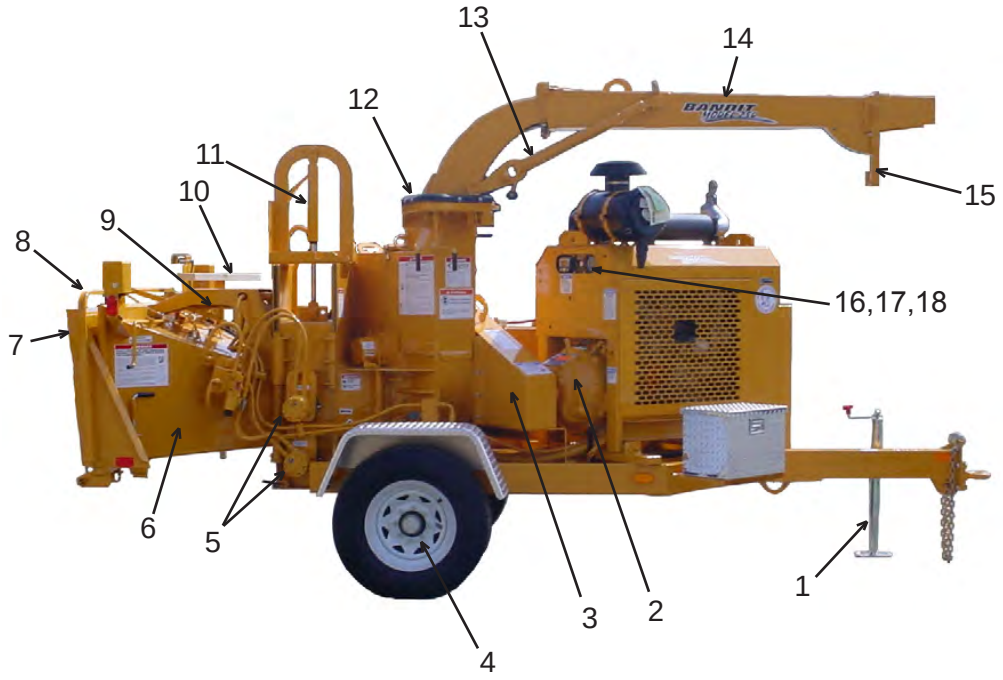

CONTROL OPERATING PROCEDURES

Feedwheel Control Bar:

The feedwheel control bar operates the feedwheel(s). To make the feedwheel(s) operate so they are pulling material into the machine, pull the control handle towards the operator away from the chipper. To make the feedwheel(s) operate so they are pushing material out of the machine, away from the chipper disc/drum, the control handle should be pushed away from the operator, away from you and towards the machine. The control bar is in the off position when it is in the center location.

Yoke Lift Control - Optional:

The yoke lift control operates the top yoke lift cylinder. To lower the yoke, push the yoke lift control handle towards the tongue of the machine. To raise the yoke, push the yoke lift control handle towards the infeed hopper of the machine. The yoke lift control handle is in the off position when it is in the center location.

Selector Valve Control - Optional:

The selector valve control allows the operator to change the operation function from the feed function to the winch function or from the winch function to the feed function. The feedwheel(s) will not operate when the selector valve is in the winch function and the winch will not work while the selector valve is in the feed function. To have the feedwheel(s) operate the selector valve needs to be pushed in, away from the operator. To operate the winch the selector valve needs to be pulled out, towards the operator.

Winch Control - Optional:

The winch control operates the winch option. To make the winch reel out push the winch control handle in, away from the operator. To make the winch pull material in pull the winch control handle out, towards the operator. The winch also has a spool rotation lock, make sure this is disengaged to free wheel cable out of spool.

Discharge Swivel Control - Optional:

NOTE: Remove transport bolt and/or lock pin BEFORE operating this function.

The discharge swivel control operates the discharge rotate. To make the discharge swivel to the right push the discharge swivel control handle down, towards the ground. To make the discharge swivel to the left pull the discharge swivel control handle up, away from the ground. The discharge swivel control handle is in the off position when it is in the center location. Do not use the hydraulics to secure the discharge when tranpsorting the chipper. Make sure to install the lock bolt and nut before transporting.

Discharge Hydraulic Flipper Control - Optional:

The discharge hydraulic flipper control operates the discharge flipper cylinder. To make the discharge flipper rotate up pull the discharge hydraulic flipper control handle up, away from the ground. To make the discharge flipper rotate downward push the discharge hydraulic flipper control handle down, towards the ground. The discharge hydraulic flipper control handle is in the off position when it is in the center location.

Hydraulic Tongue Jack Control - Optional:

NOTE: Remove lock pin BEFORE operating this function.

The hydraulic tongue jack control operates the hydraulic tongue jack cylinder. To raise the front of the machine pull the hydraulic tongue jack control handle up, away from the ground. To lower the front of the machine push the hydraulic tongue jack control handle down, towards the ground. The hydraulic tongue jack control handle is in the off position when it is in the center location. Install the lock pin at the desired tongue height.

Copyright 8/07

WINCH OPERATING PROCEDURES

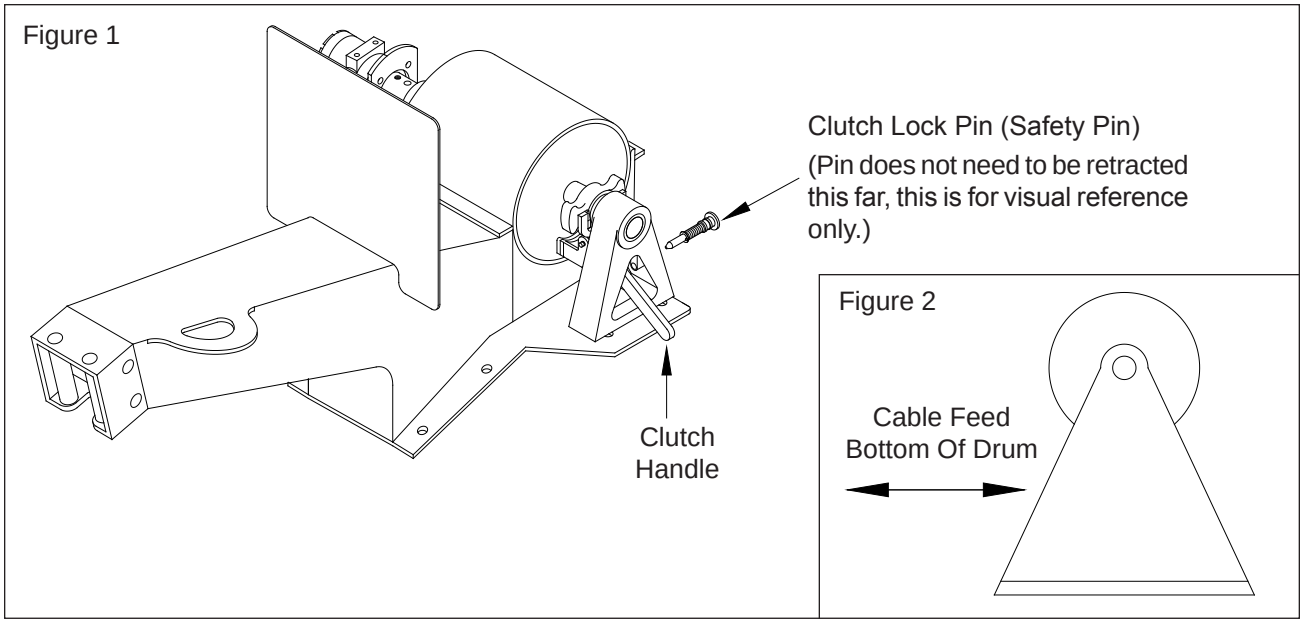

⚠ WARNING

HYDRAULIC WINCH OPERATION PER WINCH MANUFACTURER!

Install 5/16” (7.9 mm) diameter cable to pull and feed from the bottom of the winch drum (See figure 2). Remove excess bolt length on cable bolts after cable is secured to the spool.

⚠ DANGER

Never reach into the winch or winch roller area.

OPERATING PROCEDURE

1. Winch operation is a one person job. This means the person who hooks the winch to the wood material is the same person who engages the winch.
2. Place the feedwheel control bar in the off position. Make sure chipper and towing vehicle are blocked or anchored in a solid location.
3. Locate the selector valve and engage it to the winch position. The feed system should not operate with selector in winch mode.
4. Make sure the winch clutch is disengaged and pull the cable to the material to be reeled in. Attach cable securely to wood material that you want pulled to chipper.
5. Make sure everyone is clear and then retract the clutch lock pin and then pull the clutch handle up to engage the winch clutch (See Figure 1). Make sure handle is locked in position.
6. Use the winch control valve or the radio remote control (if applicable) to now pull the wood material towards the machine.
7. Once the wood material is pulled to the machine, unhook it from the winch and make sure the cable is completely reeled back in and out of the way. Attach cable to keeper loop. Make sure the cable is clear of the feedwheel(s) or severe damage can occur if the cable should enter the chipper.
8. Reengage selector valve to feed position.
9. Engage the feedwheel(s) and begin feeding wood material.

CHIPPER HOOD ENGINE DISABLE PLUG OPERATION

This chipper hood engine disable plug is installed for safety purposes. It is designed to shut down the engine if the hood pin is not properly in place holding the chipper hood in the closed position. The system must be correctly maintained and operative at all times. If the plug connector is not correctly installed the engine will not start or run.

The chipper hood engine disable plug is located on top of the chipper hood (see figure 1). The chipper engine disable plug is made up of two parts: an electric socket and a plug connector (see figure 2). The electric socket is bolted to the chipper engine disable plug mount bracket (see figure 3) and the plug connector is attached by a cable to the hood pin (see figure 4).

If the chipper engine disable plug is not properly installed then the engine will not start or run. If the chipper engine disable plug becomes disconnected while the chipper engine is running the engine will be shut down or be disabled from running. This is for safety purposes, to ensure that the hood pin is not removed and the chipper hood is not opened while the engine is running.

The chipper engine disable plug is wired to shut down the chipper engine. When the plug connector is pulled out of the electric socket the electric circuit is broken, disabling the engine.

NOTICE

The engine disable plug has a circuit fuse. If the engine will not start or run, check the fuse first before consulting the engine manufacturer's manual. Circuit fuse locations: CAT / Perkins- located at the "BATT" wire near the ignition switch, Cummins- located by engine manufacturer near the starter (wires labeled "POW"), John Deere- located by engine manufacturer "Short Stop" circuit breaker by the ignition switch on the instrument panel or fuse by the ECM, and Deutz, Hatz, Honda, Kohler, and Robin- located at the battery post on the starter.

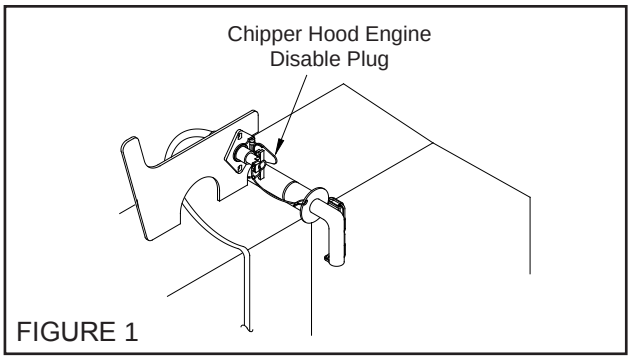

FIGURE 1

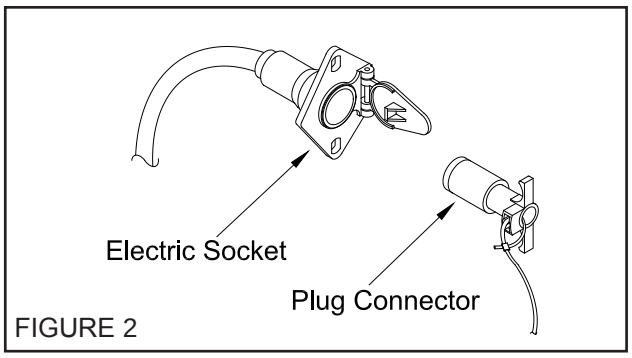

FIGURE 2

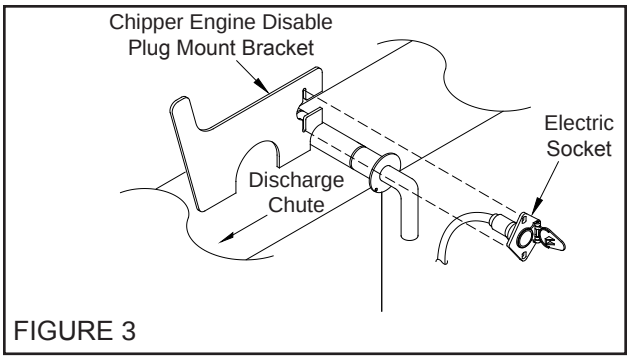

FIGURE 3

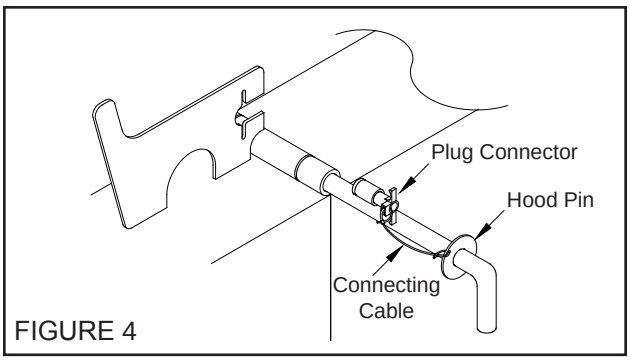

FIGURE 4

SPRING LOCK FOR HOOD PIN OPERATION

The patented spring lock for hood pin, is installed for safety purposes. It is designed to help keep the hood pin from being removed if the chipper disc is turning. NEVER ATTEMPT TO PUSH THE SPRING LOCK FOR HOOD PIN DOWN OR REMOVE THE HOOD PIN, UNTIL AFTER THE ENGINE AND CHIPPER DISC HAVE BOTH COME TO A COMPLETE STOP.

The spring lock is located on the side of the chipper hood. The top of the spring lock should be directly behind the hood pin washer when the hood pin is properly installed in place holding the chipper hood in the closed position (see figure 1).

With the chipper hood shut and hood pin in place the spring lock helps keep the hood pin from sliding out or from being removed if the chipper disc is turning. There is a shaft cam block installed on the chipper shaft which will not allow the spring lock to be pulled down if the chipper disc is turning (see figure 2). When the chipper disc is turning, if the spring lock was to be pulled down or recessed it would simply hit the shaft cam block bouncing the spring lock back into position not allowing for the removal of the hood pin.

FIGURE 1

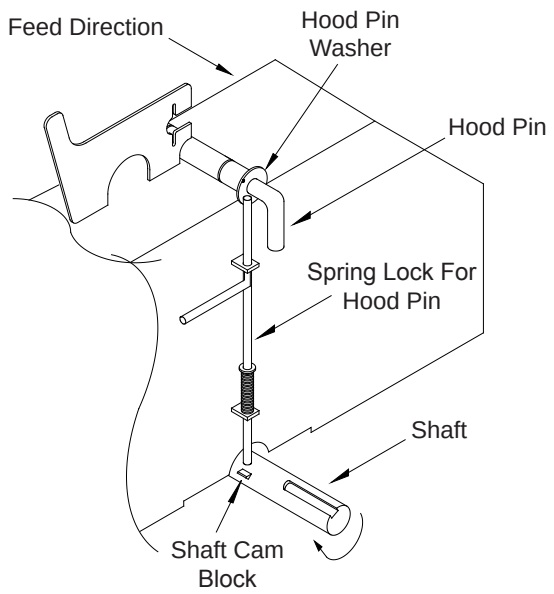

FIGURE 2

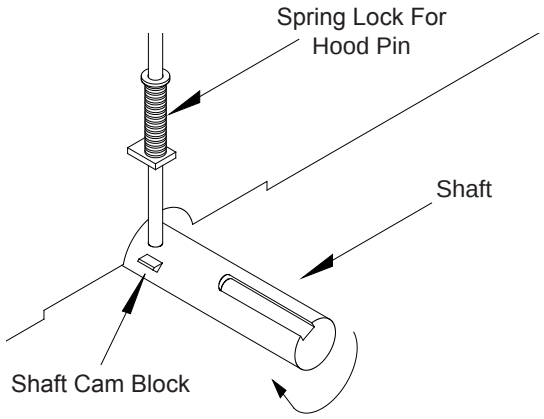

CONSULT THE ENGINE MANUFACTURER'S MANUAL FOR SPECIFIC CONTROLS, OPERATION, & MAINTENANCE FOR TYPICAL ENGINES

1) **Ignition Switch:**
Turn the ignition switch key clockwise one stop (on position) to turn the electrical system on. The key should remain in the on position while the engine is running. Turn the key fully clockwise (start position) this will start the engine. To shut off the engine, return the key to the off position.

2) **On/Off Switch - Push Button Start:**
Some gasoline engines may have a Toggle Switch or an On/Off Switch combined with a push button to start the engine. First turn the On/Off Switch or Toggle Switch to the on position, then depress and hold the Push Button Start until the engine starts, then release the button. To shut off the engine, return the On/Off Switch or Toggle Switch to the off position.

3) **Ignition Switch With Preheat:**
The typical diesel engine may have a preheat system to assist in starting the engine during cold weather. To activate the preheat system, continue to hold the ignition key in the preheat position for 15 to 20 seconds, then attempt to start the engine. If the engine fails to start within 15 seconds, return the key to the preheat position, hold 10 seconds, and try starting again.

4) **Choke Adjustment (if equipped):**
Some gasoline engines may have a choke adjustment, pull the choke lever out to choke the engine. Push the choke lever in for normal engine operations.

5) **Throttle Adjustment (if equipped):**
Some engines may have a knob or a handle for the throttle adjustment. Typically you would pull the knob out, or turn the handle to increase the engine R.P.M.'s. To decrease you would push in the knob or turn the handle the opposite way.

6) **"Bandit" Lever Lock Cable Throttle System (if equipped):**
The Bandit throttle system has (2) positions, HIGH and LOW. Engine R.P.M. is controlled by moving the lever from one position to the other.

8) **Push Button Or Electric Throttle System (if equipped):**
Some engines may have a push button or electric throttle adjustment. Engine R.P.M. is controlled by pushing a button or switch to raise or lower the R.P.M.

9) **Alternator Warning Light:**
This light will glow when the alternator is not charging, or when the ignition switch is turned on and the engine is not running.

10) **Oil Pressure Warning Light:**
This light will glow when the oil pressure is to low, or when the ignition switch is turned on and the engine is not running.

11) **Engine Temperature Warning Light:**
This light will glow when the engine, or engine coolant, is above normal operating temperature. If this occurs allow the engine temperature to cool down. If the engine is overheating because of a loss of coolant, or a broken fan belt, shut the engine off immediately.

TYPICAL DIESEL ENGINES

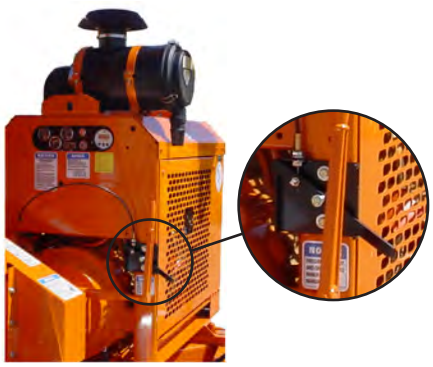

BANDIT THROTTLE SYSTEM

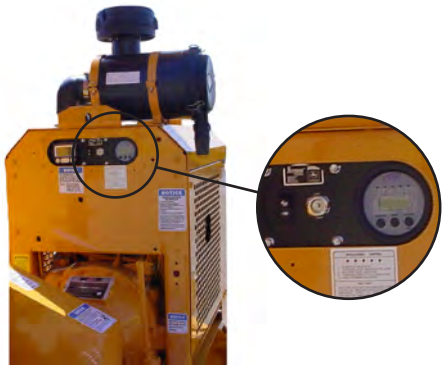

PUSH BUTTON OR ELECTRIC THROTTLE SYSTEM

TYPICAL GASOLINE ENGINE

Copyright 8/07

Transportation Procedures

⚠ WARNING

BEFORE TRANSPORTING THE MACHINE THE FOLLOWING MUST BE COMPLETED.

1) Idle engine, disengage clutch.
2) Make sure the feedwheel is in the lowered position.
3) Place all hydraulic controls in the “off” position.
4) Turn off engine, wait for the chipper disc/drum to come to a complete stop and you must have the ignition key in your possession.
5) Remove all excess debris. Remove any wood or debris which may have collected.
6) Return wooden push paddle to the mount and secure for transportation. Store all tools in the tool box and make sure all boxes and cabinets are closed and secured.
7) If equipped, close the folding infeed pan for the infeed hopper and make sure the spring latches are locked into place.
8) Raise the front of the machine or transport trailer with the tongue jack and remove the stabilization blocks used. If the machine is equipped with a hydraulic tongue jack, remove the lock pin before raising the front of the machine.
9) Couple machine or transport trailer to transport vehicle by lowering the machine onto the hitch. Make sure the hitch matches the coupling size. Then secure hitch and lock it.
10) Place the tongue jack in the transport position. If the machine is equipped with a hydraulic tongue jack, lift the foot pad to the transport position and install the lock pin.
11) Attach the safety chains by crossing them under hitch, make sure to allow the proper amount of slack in chains to avoid binding or dragging the ground when making turns.
12) Connect the brake breakaway cable (if equipped) and plug in the electrical connection for the lights on the machine or transport trailer.
13) Check running lights, turn signals, and brake lights. All must be operating properly before transporting the machine. Also check brakes (if equipped) to make sure they are operating correctly.
14) Do not transport unless discharge is clamped, pinned and bolted securely into place in the transport position pointed over the tongue.
15) If machine is equipped with a chip box, lock the turntable in the transport position.
16) Check tires for correct pressure, cuts or damaged rims.
17) Check lug nuts and retorque if necessary. Check new units before operation, check again after 20-25 miles (32-40 km) and regularly check at least weekly.
18) Inspect and replace any axle dust caps that are damaged or leaking.
19) Check wheel bearings and grease or oil axles per axle manufacturer’s manual.
20) Walk around the machine to confirm that everything is secure and that there is not anything loose that could fall off during transport. Look under machine to ensure nothing is dragging. Look down both sides of the machine for anything sticking out that may become damaged during transport.
21) If machine is equipped with a vise, make sure to secure in place and clamp jaws closed.
22) Close and secure any of the following, if equipped: engine cowl doors and side panels, radiator debris screens, inspection doors, housing covers, tanks caps and covers, etc.
23) If the machine is self propelled and on a transport trailer, make sure the trailer has the correct load capacity, the machine is positioned on the trailer for correct weight distribution, and the machine is securely bound down to the trailer bed per your States binding requirements. Make sure the loading ramps are securely stored for transport. (See Loading & Unloading Self-Propelled Machines.)
24) The machine is now ready for transport. Make sure to obey all local regulations and laws regarding the transporting of this type of machine.
25) Do not drive too fast for road conditions or exceed speed regulations for equipment towing. Machine must be hauled level and the towing vehicle must be sized to handle hitch weight, towing weight, and braking requirements.

Copyright 8/07

Loader Transportation Procedures

Figure 1

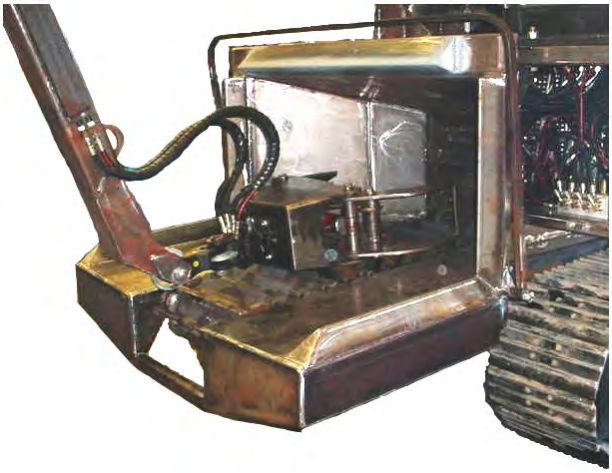

Figure 2

⚠ WARNING

IF EQUIPPED WITH LOADER OPTION, BEFORE TRANSPORTING THE MACHINE THE FOLLOWING MUST BE COMPLETED ALONG WITH THE MACHINE TRANSPORTATION PROCEDURES.

1) Idle engine, disengage clutch, and install clutch lock if equipped.
2) Close the jaws on the grapple.
3) Swing the loader to the center from side to side and install the loader swing lock pin.
4) Tuck grapple onto infeed hopper as shown in Figure 1 to help prevent damage to the hydraulic hoses and fittings. If the machine is equipped with a conveyor option, tuck grapple onto infeed hopper as shown in Figure 2. **Make sure the fittings and hoses are not in a pinched or wear position for transportation.**
5) Securely attach transport chain to the jib boom as shown in Figure 1.
6) Lower the main boom and jib boom until the transport chain is tight.
7) Place all hydraulic controls in the “off” position.
8) Turn off engine, wait for the chipper disc/drum to come to a complete stop and you must have the ignition key in your possession.
9) Place the joystick swing out in the transport position, if equipped.
10) Make sure running lights, turn signals, and brake lights are visible when loader is in the transport position.
11) Make sure all reflectors and/or lights are in proper place and in working order on the loader per Federal and your States’ Department of Transportation Code of Regulations.
12) With the machine in the transport position, measure the overall height and width to make sure the machine is within the highway clearance regulations of the Department of Transportation.

Copyright 8/07

Loading & Unloading Self-Propelled Machines

⚠ WARNING

BEFORE ATTEMPTING TO USE A TRAILER FOR TRANSPORT, MAKE SURE THE TRAILER TOWING VEHICLE IS APPROPRIATE FOR THE TASK.

1) The trailer has a cargo weight rating capacity for the weight of the machine. The combined weight of the trailer and the machine can not exceed the load capacity of the tires, axles, hitch coupler system or the GVWR (Gross Vehicle Weight Rating) of the trailer.
2) The trailer must have a lighting system and a braking system to match and perform correctly off the towing vehicle's system. You must meet the Federal and your States' Department of Transportation Code of Regulations concerning lights, brakes, and highway transit.
3) Make sure the towing vehicle has the hauling and hitch capacity ratings for the trailer and machine combination. The towing vehicle must be mechanically sound and capable of handling the towing job.
4) The trailer should be constructed with appropriate chain down positions for the specific sized machine. You must have binders that will withstand the strain of the machine trying to move while it is being transported.
5) When the machine is positioned on the trailer bed, there should be about 15% of the total trailer package weight on the tongue or hitch.
6) The loading ramps or loading gate of the trailer must be constructed to withstand the weight and forces involved in loading and unloading the machine.

⚠ WARNING

BEFORE LOADING OR UNLOADING THE MACHINE INSPECT AND CONFIRM THE FOLLOWING STEPS: When loading or unloading the self-propelled machine on the trailer, use care and caution. The maneuvering of the equipment must be slow, smooth, and intentional, not fast and jerky.

1) Make sure the trailer and towing vehicle are parked on a flat surface. They must be stable on the surface with the brakes locked and/or the wheels choked to avoid unwanted movement.
2) Position the loading ramps or loading gate securely between the trailer and the ground level. Have them located so that they are in line with the tires or tracks of the machine when it moves.
3) Remove and store the chains and binders used for transporting.
4) Confirm that there are not any obstacles on the trailer bed, around the trailer that may cause restricted movement of the machine or the operator.
5) The only person in the area should be the one that is operating the machine controls, and he/she should be very experienced with the controls on this machine.
6) If you are on streets, roads or public areas, position the warning cones etc, per your company's safety policy.
7) Follow all pre-startup instructions for the machine.
8) Typically, the engine end of the machine should be positioned so that it is toward the tongue of the trailer, during transport.
9) Align the machine with the trailer bed, and the loading ramps. The only equipment movement should be slowly, straight on or straight off the trailer.
10) With the engine and the machine at as low a speed as possible, move the machine toward the ramp system. Make sure the alignment is correct throughout the travel.
11) Properly secure the equipment and the area to avoid any possible accidents or dangers.

Copyright 8/07

MAINTENANCE SECTION

The Bandit is a very simple machine to maintain. If you will follow a regular scheduled preventative maintenance program you should have years of trouble free operation.

⚠ DANGER

Before attempting any type of maintenance disengage clutch, turn off engine, wait for the disc/drum to come to a complete stop, install the disc/drum lock pin, disconnect battery, and make sure the ignition key is in your possession.

⚠ DANGER

Do not let anyone operate or maintain this machine until they have thoroughly read this manual, reviewed the equipment decals, watched the equipment video, and has been properly trained. You can purchase additional Bandit manuals, decals and videos for a nominal fee.

NOTICE

Consult your engine manual for proper break-in procedures. Various engines require somewhat different procedures, but basically the engines need to operate at lower R.P.M.'s and loads for a specific time.

NOTICE

Failure to properly break-in your engine may result in poor bearing and piston ring surfaces.

NOTICE

The Bandit has only been run for a short time to test proper hydraulic pressures, possible leaks, etc. The fuel tank will be empty. Fuel is provided through a small auxiliary tank for testing. This immensely helps maintain safety in our manufacturing facility and while shipping.

NOTICE

Expensive damage to the Bandit will occur if proper preparation is not taken before welding on the machine. Be sure to disconnect both battery cables and the engine ECM (engine control module) before welding. Follow the specific Engine MFG. instructions for proper welding and grounding procedures, before attempting to weld on the machine. If welding on the machine, do not ground the welder through the machine bearings, ground near work to be performed.

DAILY START UP & MAINTENANCE

1) Check the safety decals and engine gauges:
Replace any missing or damaged decals and/or engine gauges.

2) Check all safety equipment:
Check for proper operation. Repair or replace as needed. With everything shut down and stopped, insure last chance cables freely operate feed control valve.

3) Check entire machine for loose bolts, nuts, parts, or components:
Check entire machine for any loose parts or components. Check for loose nuts or bolts. Torque, tighten, or replace any of the loose components. See page 40 for specific bolt torques.

4) Check all guards:
Check to make sure all guards are in place and installed correctly. Make sure they are secure.

5) Check chipper hood hinge:
Make sure the hood hinge operates correctly, and is lubricated. Must replace hinge if damaged.

6) Checking for foreign objects:
Before opening the hood make sure the clutch is disengaged, the engine off, the disc/drum lock pin is installed, battery is disconnected, and also make sure the ignition key is in your possession. Remove the hood pin padlock, disconnect the chipper hood engine disable plug, suppress the spring lock for hood pin on disc chippers, and then remove the hood lock pin. Look for any foreign objects inside the chipper housing. Remove any foreign objects found.

DAILY START UP & MAINTENANCE (cont.)

7) Check chipper disc assembly:
Check for elongated bolt holes, secure welds, torqued bolts, excessive wear and impact cracks. If a problem is found contact the chipper manufacturer or an authorized Bandit dealer. Also check the chipper housing at this time. Check the chipper base, belly band, and hoods for wear or damage. Also inspect the chipper bearings.

8) Check chipper disc/drum to turn:
Very carefully, manually with a pry bar or wood bar, turn the chipper disc/drum a full revolution. This is to ensure the anvil and knives have proper clearance. If the chipper disc/drum is jammed with debris or frozen in place, DO NOT attempt to start the engine and engage clutch until the chipper disc/drum rotates freely.

9) Check the condition of your fan blades, knives, anvil, and attaching hardware:
Grind, file, or replace your knives to keep them sharp. Check the fan blades, anvil, and attaching hardware for the knives and anvil. Replace if necessary.

10) Properly torque the knife mounting hardware:
All knife mounting hardware must be factory approved. Knife mounting hardware must be replaced after maximum of 4-5 knife rotations/changes to insure safe clamping ability.

Torque set, AT ALL TIMES to:

See TORQUE CHART on page 40.

11) Hood lock pin and padlock:
After closing chipper hood, reinsert the hood pin and padlock, make sure pin is tight and secure. If worn replace immediately. Don't use a worn or makeshift hood pin. Make sure the spring lock for the hood pin is in the correct position on disc chippers. Make sure the chipper hood engine disable plug is installed correctly and that it is also operating properly.

12) Grease all feedwheel and chipper bearings daily:
Use an EP-2 Lithium type grease only for all bearings. Purge chipper bearings with grease. You can not over grease these bearings. Grease feedwheel bearings with one shot of grease. Both types of bearings are designed with a relief system that will not allow over greasing. In other words, you can not hurt the bearing seals by pumping in too much grease. Most of the failures related to bearings are diagnosed as "Contamination". Contamination is caused by improper lubrication. Wipe off excess grease. **Excessive grease will attract dirt.**

13) Check / adjust the chipper drive belt tension:
The belts will need to be tightened several times in the first few days of operation. A loose belt will slip and then glaze over. Once they slip you must replace them. Check hydraulic pump drive belts also if equipped. See pages 44 - 45 for procedures.

14) Check the hydraulic pump and motor shafts:
Check the hydraulic pump and hydraulic motor shafts for fit and tightness.

15) Check hydraulic oil level:
The hydraulic oil reservoir tank level should always remain at 7/8 full. Remember to check DAILY to avoid excessive heat build up.

16) Check for any fluid leaks:
Inspect for any oil, fuel, hydraulic oil, or engine coolant leaks. Check all hoses, fittings, lines, and tanks. DO NOT use fingers or skin to check for hydraulic leaks. Repair or replace any damaged or leaking components.

17) Check hydraulic control valves:
Inspect all hydraulic control valves and insure they operate smoothly and shift correctly.

18) Check the fuel level:
Check the fuel level, running out and repriming is time consuming. Do not over fill, and you must leave fuel expansion space in the top of the tank.

19) Check engine oil and coolant level:
Follow the engine manufacturer manual recommendations for fluid levels. You MUST follow specific ENGINE MFG. manual recommendations for radiator coolant, additives, lubrication, correct engine speed, ETC.

20) Check radiator, debris screen:
Thoroughly clean radiator fins at least once a day and twice in excessive conditions. Make sure debris is not packed between fins. Use pressurized water spray to clean. Do not rely on air pressure. The radiator will only appear to be clean. A partially plugged radiator will not allow the engine to cool properly. Clean cooling fan, shroud on air cooled engines, and the debris screen (if so equipped). Improper service, maintenance, or neglect will cause overheating problems and engine failure.

21) Check air cleaner or precleaner:
Clean or replace element following engine manual recommendations.

22) Check clutch:
Check for proper lubrication, and engagement tension adjustment, frequently adjust and lubricate per PTO clutch manufacturer's manual. Bandit Industries, Inc. does not warranty clutch failures.

23) Check tires:
Check tires for wear, weather checking and damage. Replace if damaged.

DAILY START UP & MAINTENANCE (cont.)

24) Inspect axle dust caps:
Inspect axle dust caps and replace if damaged or leaking.

25) Check the infeed hopper:
Check in the infeed hopper for any foreign objects and around the entire machine for tools, cans, saws, etc. All tools not in use should be stored in a tool box.

26) Block the tires and tongue:
Before operation block the tires and tongue for stability. Do not rely on tongue jack for operational stabilization.

27) Check the discharge direction:
Remove transport bolt and nut, then make sure the discharge is pointed in a safe direction and locked into place.

28) Review all safety procedures on decals, from manual, and from video.

29) Make sure all safety equipment is being worn:
Hard hat, gloves, eye protection, ear protection, etc.

30) Remember to check EVERYTHING on the checklist.

WEEKLY MAINTENANCE

1) Check anvil clearance, tightness, and wear:
Measure the anvil clearance. The clearance should be .045" (1.1mm) to .065" (1.7mm) on a Model 250 and .060" (1.5mm) to .080" (2mm) on a Model 254 from highest knife. Check the anvil hardware, make sure the bolts are at the proper tightness. The anvil is a normal wear item, if it is worn you can rotate it to a new working edge. Refer to page 46 for the exact checking of anvil clearance procedure.

2) Check alternator and fan belts on engine:
As applicable adjust and maintain per the engine manufacturer's manual.

3) Check spring tension on feedwheel system:
Do not over tighten. Keep tight for small diameter material and progressively looser for larger diameter material. See page 43.

4) Check wheel lug nuts:
Keep lug nuts tight, retorque, replace if needed.

5) Check and retighten tank mount bolts:
Check and retighten the fuel tank and hydraulic tank mount bolts.

6) Lubricate all pivoting and hinged areas:
Lubricate all pivoting and hinged areas on the machine (i.e. control handle, discharge flipper, etc.)

7) Lube chain driven components:
Use a dry lube on any chain driven components: hydraulic swivel discharge and chain driven feedwheels.

8) Check and oil feedwheel slide box:
Check that feedwheel slide box is working smoothly, oil with 10W/30 type motor oil. Especially new machines need oiling to ensure correct operation during break-in.

MONTHLY MAINTENANCE

1) Check towing hitch:
Check for excessive damage or wear. Replace if needed. Keep pintle ring greased to reduce wear.

2) Check discharge and infeed hopper wear:
Check for wear on discharge, infeed hopper, and discharge direction adjustor; build up, repair or replace as needed.

3) Inspect feedwheel motor connections:
Check and maintain correct torque, on feedwheel motor connections. See page 47.

4) Check feedwheel teeth for sharpness:
Replace if needed.

5) Check chipper bearings and chipper sheave:
Check, retighten all bearing bolts, bearing lock collars, and also belt sheave bushings to correct torques.

6) Tire air pressure:
Fill each tire to rated capacity on tire.

7) Check hydraulic function pressures:
Check, reset and maintain all hydraulic function pressure settings to a maximum of the specified PSI (bar). This will give you the best performance from the hydraulic system.

8) Check wheel bearings:
Check and grease or oil wheel bearings per axle manufacturer's instructions.

9) Check and adjust brakes:
Check and adjust brakes as needed per axle MFG. manual.

10) Lubricate "Bandit" lever throttle cable:
If the machine is equipped with a "Bandit" lever throttle system, lubricate inner throttle cable and cable ends with a cable lube or SAE 10W/30 oil. Replace throttle cable if it doesn't operate smoothly.

3 MONTH MAINTENANCE

1) Hydraulic oil filter(s):
Must be replaced after FIRST 10 HOURS OF OPERATION, USE A 10 MICRON FILTER, then quarterly or every 400 hours afterwards.

2) Grease discharge swivel plates:
Grease swivel plates for discharge as needed.

3) High pressure oil filter(s) (if equipped):
Must be replaced after FIRST 10 HOURS OF OPERATION, then quarterly or every 400 hours afterwards.

YEARLY MAINTENANCE

1) Hydraulic oil:
Change hydraulic oil and flush the hydraulic reservoir tank.

2) Hydraulic suction screen(s):
Change hydraulic suction screen(s) yearly or every 2000 hours.

BOLT TORQUE CHART

(THESE TORQUES ARE BASED ON DRY, CLEAN THREADS)

DESCRIPTION	BOLT SIZE	TORQUE (FT.-LBS.)	TORQUE (Nm)
Chipper Bearing Bolts	5/8” - 11 NC	150	203
Chipper Shaft Bearing Retainer	3/4” - 10 NC	175	237
Chipper Draw Ring - Model 250	5/8” - 18 NF	150	203
Chipper Draw Ring - Model 254	3/4” - 16 NF	200	271
Anvil	3/4” - 10 NC	175 - 180	237 - 245
Knife Bolts (1/2” x 4 1/2” Knife - New Style)	5/8” - 11 NC	180	245
Knife Bolts (1/2” x 4” Knife - Old Style)	1/2” - 13 NC	70 - 80	98 - 108
Feedwheel Bearing Bolts	1/2” - 13 NC	75	102
Feedwheel Bearing Set Screws	3/8” - 24 NF	20	27
Grip-Tight Feedwheel Bearing Set Screws		2	3
Engine Hold Downs	1/2” - 13 NC	60	81
Engine Hold Downs	5/8” - 11 NC	125	169
“RE” Hydraulic Feedwheel Motor Shaft Nut	1” - 20 NEF	250 - 300	339 - 407
Engine Sheave Bushing “SK”	5/16” - 18 NC	15	20
Engine Sheave Bushing “SF”	3/8” - 16 NC	30	41
Chipper Sheave Bushing “E”	1/2” - 13 NC	60	81
Chipper Sheave Bushing “F”	9/16” - 12 NC	75	102
Quad Feedwheel Sprocket Bushing “Q1”	3/8” - 16 NC	30	41
Autofeed Cartridge Nut		4 - 6	5 - 8
Autofeed Plus Solenoid Retainer Nut		4 - 6	5 - 8
Hitch Mount Bolts	5/8” - 11 NC	220	298

Before tightening bolts be sure you have the correct size bolt for the correct amount of torque.
Use only factory approved knives and hardware.

BASIC WHEEL TORQUE REQUIREMENTS (per mfg.)

KEEP LUG NUTS PROPERLY TIGHTENED, CHECK NEW UNIT BEFORE OPERATION, CHECK AGAIN AFTER 20-25 MILES (32-40 km) AND REGULARLY CHECK AT LEAST WEEKLY.

5 & 6 Lug Hubs (1/2” - 20 Studs) .....90 - 120 ft.-lbs. Torque (122 - 163 Nm)
8 Lug Hubs (1/2” - 20 Studs) .....90 - 120 ft.-lbs. Torque (122 - 163 Nm)
8 Lug Hubs (9/16” - 18 Studs) .....110 - 120 ft.-lbs. Torque (149 - 163 Nm)
8 Lug Hubs (5/8” - 18 Studs) .....190 - 210 ft.-lbs. Torque (258 - 285 Nm) (Cone Nut)
8 Lug Hubs (5/8” - 18 Studs) .....275 - 325 ft.-lbs. Torque (373 - 441 Nm) (Flange Nut)
10 Lug Hubs (3/4” - 16 Studs) .....450 - 500 ft.-lbs. Torque (610 - 678 Nm)
(Consult axle manufacturers manual shipped with each machine for specific axle-stud-wheel combination lug nut torques.)

DAILY START UP & MAINTENANCE CHECK LIST

Each day before starting your machine these checks must be made:

		O.K.	Repaired
1)	Check the safety decals and engine gauges, replace if damaged.	☐	☐
2)	Check, maintain, and service all safety equipment for proper operation: "Last Chance Stop" system, engine disable plug, control bar, hood pin, spring lock for hood pin (disc chippers only), pusher tool, etc.	☐	☐
3)	Check entire machine for loose nuts, bolts, and components.	☐	☐
4)	Check all guards to make sure they are tight and securely in place.	☐	☐
5)	Make sure hood hinge operates correctly, is not damaged, and is lubricated.	☐	☐
6)	Open chipper hood and check for any foreign objects.	☐	☐
7)	Check the condition of chipper disc/drum assembly.	☐	☐
8)	Carefully rotate the chipper disc/drum with a pry bar or wood bar to insure proper anvil clearance. If chipper disc/drum is jammed with debris or frozen in place, do not attempt to start engine and engage clutch until chipper disc/drum rotates freely.	☐	☐
9)	Check the condition of your fan blades, knives, anvil, and attaching hardware.	☐	☐
10)	Properly torque knife mounting hardware.	☐	☐
11)	After closing chipper hood, reinsert the hood pin and padlock, make sure the hood pin is tight and secure. Make sure the hood lock pin is firmly in place, the spring lock for hood pin springs back into position on disc chippers, and the chipper hood engine disable plug is installed correctly.	☐	☐
12)	Grease chipper bearings (purge) and feedwheel bearings (1 shot) daily.	☐	☐
13)	Check and/or adjust belt tension on chipper and hydraulic pump belt drives.	☐	☐
14)	Check hydraulic pump and motor shafts for fit and tightness.	☐	☐
15)	Check and always maintain hydraulic level at 7/8 full.	☐	☐
16)	Check all hoses, fittings, lines, and tanks for damage and fluid leaks.	☐	☐
17)	Check hydraulic control valves and insure they operate and shift correctly.	☐	☐
18)	Check fuel level. (Running out and repriming is time consuming).	☐	☐
19)	Check engine oil, coolant levels, and correct engine speed. Follow ENGINE MANUFACTURER'S manual specs.	☐	☐
20)	Check radiator and debris screen. Clean as necessary. Clean cooling fan and shroud on air cooled engines.	☐	☐
21)	Check air cleaner and precleaner. Clean as necessary.	☐	☐
22)	Check clutch for proper engagement tension and lubrication, frequently adjust and grease per PTO manufacturer's manual recommendations.	☐	☐
23)	Check condition of the tires.	☐	☐
24)	Inspect and replace any axle dust caps that are damaged or leaking.	☐	☐
25)	Check infeed hopper and around the entire machine for any foreign objects, tools, cans, saws, etc.	☐	☐
26)	Block tires and tongue for stability before operation. Do not rely on tongue jack.	☐	☐
27)	Remove transport bolt and nut, then make sure discharge is pointed in safe direction and locked into place.	☐	☐
28)	Review all safety procedures on decals, from manual, and from video.	☐	☐
29)	Wear all applicable safety equipment: hard hat, gloves, eye protection, ear protection, etc.	☐	☐
30)	Remember to check EVERYTHING on the checklist.	☐	☐

Copyright 8/07

WEEKLY CHECK LIST

		O.K.	Repaired
1)	Check anvil clearance, tightness, and wear.	☐	☐
2)	Check alternator and fan belts on engine.	☐	☐
3)	Check spring tension on easy climb system.	☐	☐
4)	Check and retighten wheel lug nuts.	☐	☐
5)	Check and retighten fuel tank and hydraulic tank mount bolts.	☐	☐
6)	Lubricate pivoting and hinged areas (i.e. control handle, discharge flipper, etc.)	☐	☐
7)	Use a dry lube on any chain driven component.	☐	☐
8)	Check feedwheel slide box is working smoothly and oil.	☐	☐

MONTHLY CHECK LIST

		O.K.	Repaired
1)	Check towing hitch for wear, keep pintle ring greased.	☐	☐
2)	Check discharge, and infeed hopper for wear.	☐	☐
3)	Inspect feedwheel motor connection.	☐	☐
4)	Check feedwheel teeth for sharpness.	☐	☐
5)	Check, retighten all bearing and chipper sheave bolts.	☐	☐
6)	Check and fill tires to rated pressure.	☐	☐
7)	Check hydraulic function pressures. Set to specified PSI (bar).	☐	☐
8)	Check and grease or oil wheel bearings, follow axle MFG. instructions.	☐	☐
9)	Check and adjust brakes, follow axle MFG. instructions.	☐	☐
10)	Lubricate “Bandit” lever throttle cable.	☐	☐

3 MONTH CHECK LIST

		O.K.	Repaired
1)	Replace hydraulic filter(s) after first 10 hours then quarterly or every 400 hours.	☐	☐
2)	Grease swivel plates for discharge as needed.	☐	☐
3)	Replace high pressure oil filter(s) (if equipped) after first 10 hours then quarterly or every 400 hours.	☐	☐

YEARLY CHECK LIST

		O.K.	Repaired
1)	Change hydraulic oil and flush the hydraulic tank.	☐	☐
2)	Replace hydraulic suction screen(s) annually or every 2000 hours.	☐	☐

⚠ WARNING

WHEN YOU CHANGE CHIPPER KNIVES

CHECK CHIPPER DISC ASSEMBLY FOR ELONGATED KNIFE BOLT HOLES, SECURE WELDS, TORQUED BOLTS, EXCESSIVE WEAR AND IMPACT CRACKS. IF A PROBLEM IS FOUND CONTACT CHIPPER MANUFACTURER, OR AN AUTHORIZED CHIPPER DEALER.
ALSO CHECK THE CHIPPER HOUSING AT THIS TIME. CHECK BELLY BAND, BASE AND HOODS FOR WEAR AND DAMAGE. ALSO INSPECT THE CHIPPER BEARINGS.

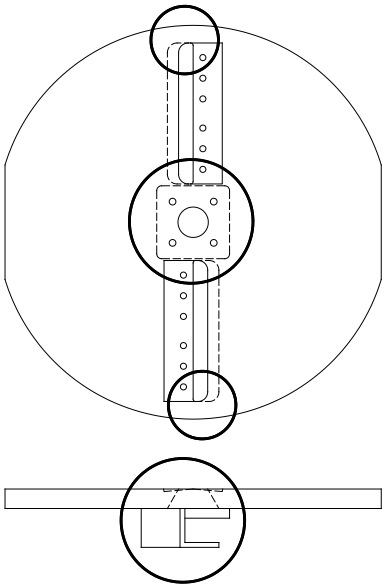

EASY CLIMB FEED SYSTEM

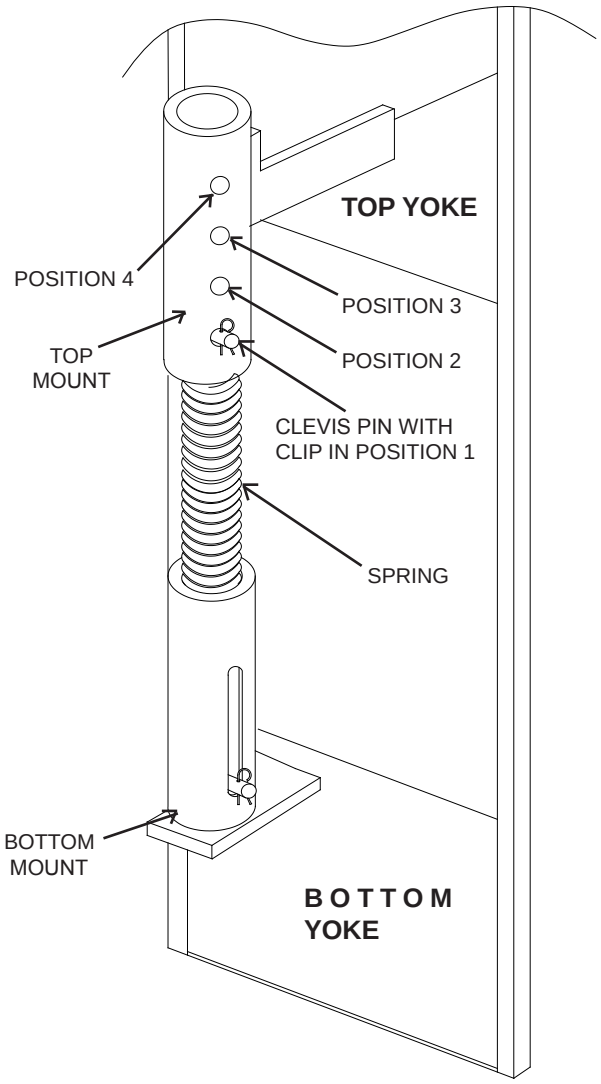

⚠ DANGER

Before attempting any type of maintenance disengage clutch, turn off engine, wait for the disc/drum to come to a complete stop, install the disc/drum lock pin, disconnect battery, and make sure the ignition key is in your possession.

The Easy Climb System allows you to adjust the amount of spring tension put on the top feedwheel. The more spring tension you have the harder it will be for your top feedwheel to raise. More spring tension will keep the top feedwheel down on smaller brush material. The less spring tension you have the easier it will be for the top feedwheel to raise. Less spring tension allows the top feedwheel to raise, and climb over the larger diameter material. Additional spring tension requires more hydraulic yoke lift cylinder power to raise the top feedwheel. May require slight hydraulic relief valve adjustment.

There are four adjustment positions on the Easy Climb System. When adjusting spring tension have the top feedwheel in the lowered position. Use the Clevis Pin with Clip to adjust the tension. Make sure that the Clevis Pin is installed properly and that the Clip is secured tightly in place.

With the pin in position 1 the Easy Climb System will have approximately 6” (152 mm) of travel before you start spring tension. Use this position when chipping the maximum diameter material allowed by the chipper.

With the pin in position 2 the Easy Climb System will have approximately 4” (102 mm) of travel before you start spring tension. Use this position while chipping slightly smaller material than the maximum diameter material allowed by the chipper.

With the pin in position 3 the Easy Climb System will have approximately 2” (51 mm) of travel before you start spring tension. Use this position when chipping brush type material.

With the pin in position 4 the Easy Climb System will have approximately 0” of travel before you start spring tension. Use this position when chipping small brush type material.

ADJUST ACCORDINGLY AS SPRINGS STRETCH.

BELT TENSION

GENERAL RULES FOR TENSIONING

1. Check tensioning during the first 2 through 48 hours of run-in operation especially.
2. Over tensioning or under tensioning shortens belt and bearing life.
3. Keep belts free from foreign materials that may cause the belt to slip.
4. Make V-drive inspection on a periodic basis. Never use belt dressing as this will damage the belt and cause early failure.
5. Belts should never be forced over the sheave. Allow enough room for belts to slip on.
6. Always make sure sheaves are aligned properly.

TENSIONING PROCEDURE

Main Drive Belts

Follow all pre-maintenance shut down procedures. Locate the center of the belt span between the sheaves. Push or pull on the belt until the belt has deflected 3/8" (9.5 mm) for Model 250 or 1/2" (12.7 mm) for Model 254. Record the push or pull force. The force should be 9 to 10 lbs./belt (4.1 to 4.5 kg/belt) for Model 250 or 14 to 15 lbs./belt (6.4 to 6.8 kg/belt) for Model 254. Adjust the belt tension if the force falls outside of this range. If belts are not properly adjusted belts will slip, glaze over, and be ruined. This is NOT covered by warranty.

1) Remove beltshield.
2) To adjust the belt tension, loosen the four engine mounting bolts and the jam nuts on the engine adjuster on the radiator end of the engine.
3) Adjust the belt tension with the engine adjuster on the clutch end of the engine. If you have to push the engine with the adjuster, the belts will tighten slightly after the engine is realigned.
4) Use the engine adjuster on the radiator end of the engine to realign the engine, so the engine sheave and chipper sheave are aligned. The sheaves can be checked with a string or straight edge.
5) Torque the two engine mounting bolts (see Torque Chart for the correct torque) on the opposite side of the engine from the engine adjusters.
6) Loosen the jam nuts on the engine adjuster on the radiator end of the engine.
7) Torque the engine mount bolt and then tighten the engine adjuster jam nuts on the radiator end.
8) Hand tighten the remaining engine mount bolt and loosen the engine adjuster jam nut on the clutch end half a rotation. Loosen the engine adjuster jam nuts all the way and torque the engine mount bolt.
9) Tighten the engine adjuster jam nuts on the clutch end.
10) Recheck the belt tension and alignment, if readjustment is needed go back to step 2.
11) Reinstall beltshield.

NOTE: lbs./belt (kg/belt) is per 1 belt. If equipped with 4 groove poly band belt, lbs./belt (kg/belt) must be multiplied by 4. If equipped with two 3 groove poly band belts, lbs./belt (kg/belt) must be multiplied by 3 for each poly band belt.

NOTE: It is a good practice to rotate the belts during tensioning. Then recheck deflections. The belts may need to be tightened again.

Pump Drive Belts (If equipped)

1) Locate the center of the span between sheaves.
2) Push or pull down on the belt until the belt has deflected 1/4" (6.4 mm).
3) Record push or pull down force. The force should be 12 lbs (5.4 kg).
4) Adjust the belt tension if the force falls outside of this range.

Do not over tighten the hydraulic pump belt. For best results use a good belt tension tester. Most all pump failures result from too much side load on the pump shaft. Too much belt tension is very easy to detect inside a failed pump. Pumps with this condition will not be covered under warranty.

DO NOT IGNORE THIS MAINTENANCE RULE!

New belts stretch very soon and must be adjusted several times in the first few hours of operation. Adjust after one hour of operation, then every four hours until the belts quit stretching.

Failure to do this will cause the belts to burn and fly off. **THIS FAILURE IS NOT COVERED BY WARRANTY!**

Copyright 8/07

BELT TENSION

FIGURE 1

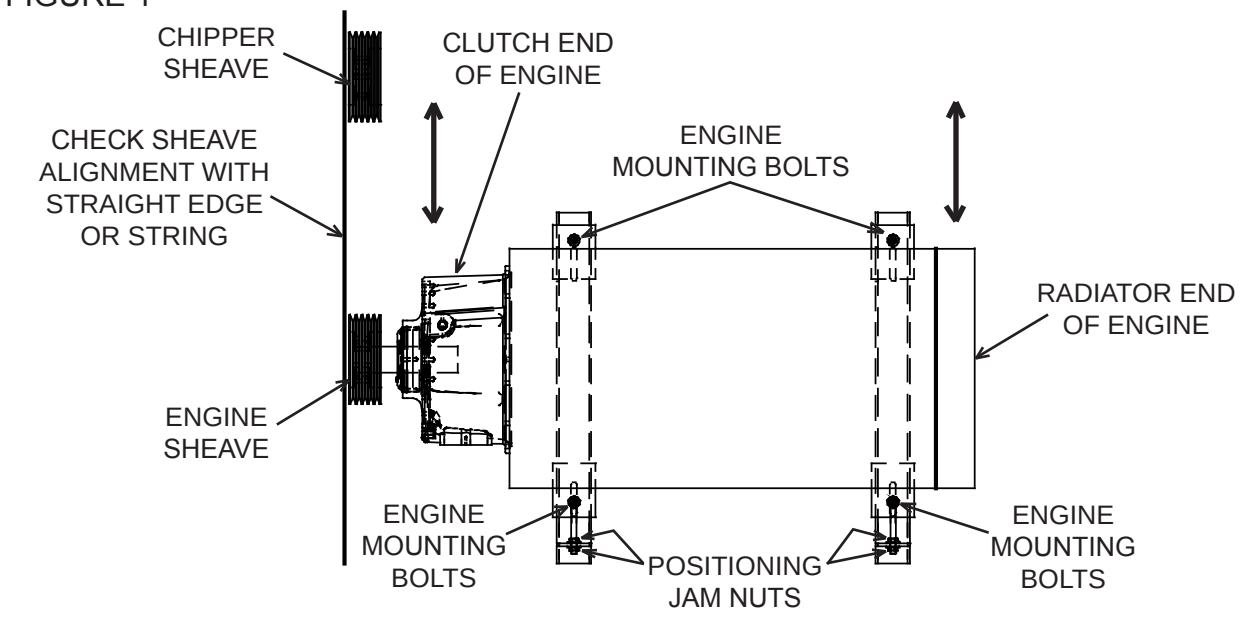

FIGURE 2

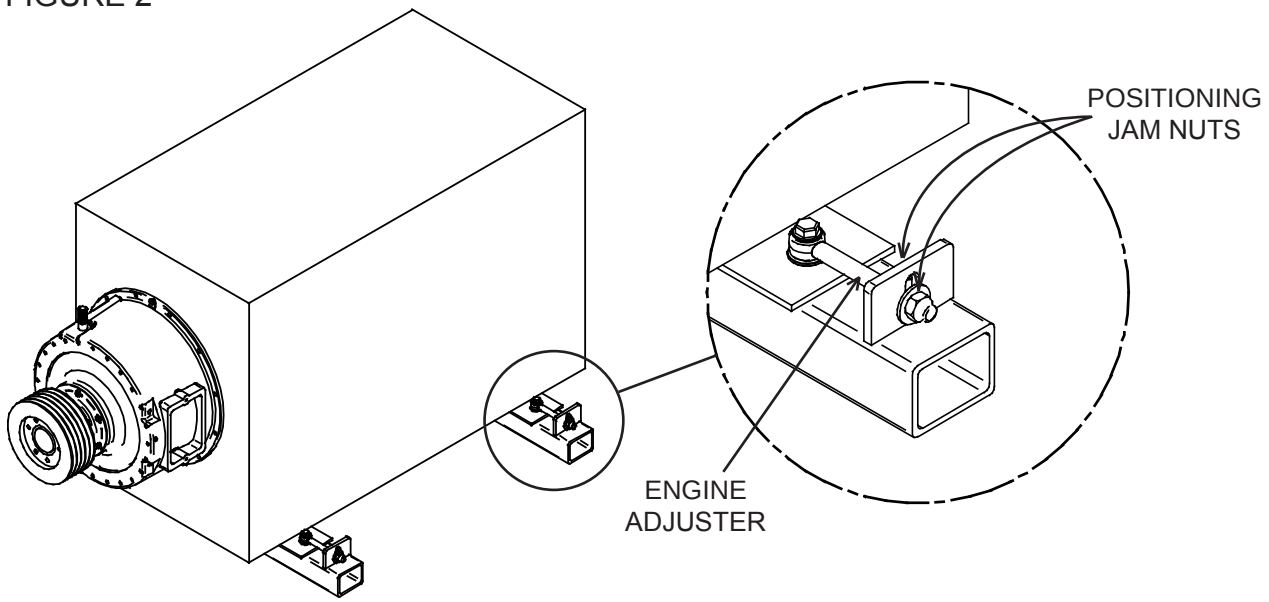

Worn or misaligned belts and sheaves in the power train causes belt slippage, thus power loss. Keep the power train working for you, not against you, by checking for needed adjustment or replacement.

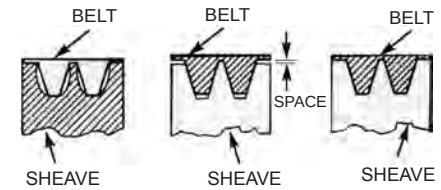

Main Drive belts maximum of 3/8" deflection with 9 to 10 lbs. of force for a Model 250.
Main Drive belts maximum of 1/2" deflection with 14 to 15 lbs. of force for a Model 254.

Pump Drive belts maximum of 1/4" deflection with 12 lbs. of force.

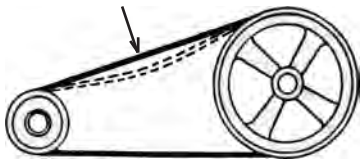

ANVIL ADJUSTMENT

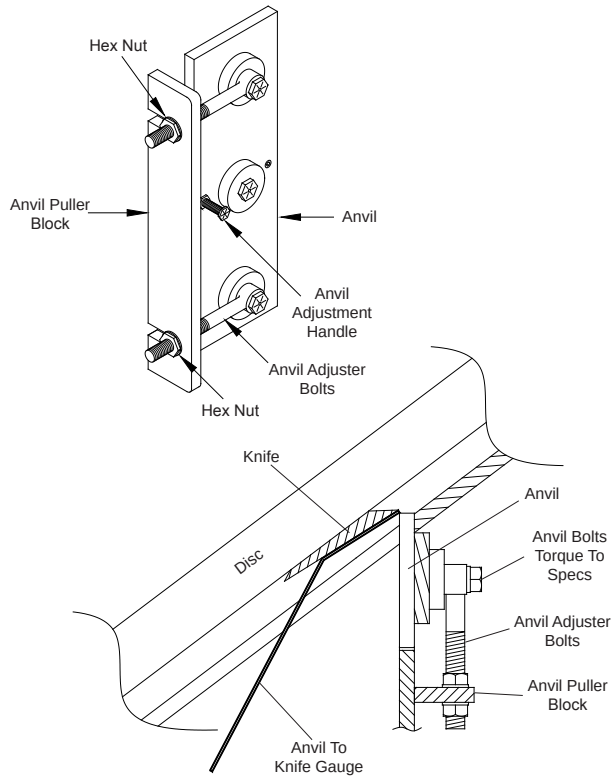

⚠ DANGER

Before attempting any type of maintenance disengage clutch, turn off engine, wait for the disc to come to a complete stop, install the disc lock pin, disconnect battery, and make sure the ignition key is in your possession.

Before working inside the infeed hopper or under the top feedwheel remove the easy climb springs from the top yoke, raise the yoke , install the yoke lock pin, safety chain the yoke in the raised position, and insert a wooden block to assist in holding the yoke in the raised position.

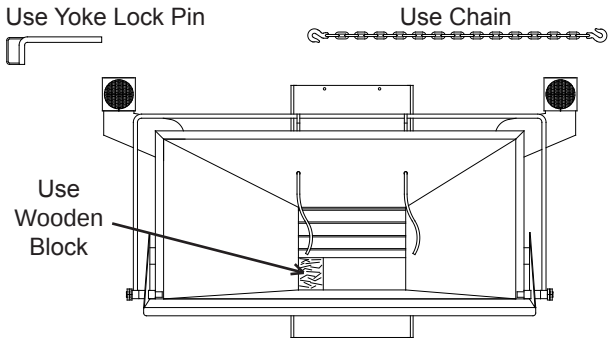

Check the Anvil to Knife Clearance

This clearance should be checked on a weekly basis or as knives are changed. To check the anvil clearance the above safety procedures must be taken. Once all safety procedures are completed the anvil to knife clearance can be checked. In order to check the clearance one person will need to climb into the infeed hopper. Use a feeler gauge or the anvil to knife gauge supplied by Bandit to check the clearance of the first knife to the anvil. Check the clearance at the top and bottom of the anvil. Once those knives have been checked, climb back out of the infeed hopper, remove the disc lock pin, and very carefully rotate the chipper disc so the other knives can be checked.

⚠ DANGER

Do Not under any circumstance attempt to rotate the chipper disc while someone is inside the infeed hopper. They may become seriously injured, Do Not Do This!

Once the disc has been rotated, reinstall the disc lock pin, and then check the clearance between the next knife pocket. Once all knives have been checked, adjust the anvil according to the closest knife. The anvil to knife clearance on a Model 250 should be .045 to .065 inches (1.1 to 1.7 mm) and a Model 254 should be .060 to .080 inches (1.5 to 2 mm). Set the closet knife to this distance.

Anvil Adjustment Procedure

(Refer to above Figure)

To adjust the anvil first loosen two of the hex nuts on either the inside or outside of the anvil puller block. Also loosen the three anvil mounting bolts. If the anvil needs to be adjusted closer to the disc, loosen the outside anvil adjuster hex nuts. If the anvil needs to be adjusted away from the disc, loosen the inside anvil adjuster hex nuts. Once the nuts have been loosened, use the anvil adjustment handle to move the anvil. This is a two person job, one to move the anvil and the other to check the clearance. Once the knife is set to the correct clearance, a Model 250 should be .045 to .065 inches (1.1 to 1.7 mm) and a Model 254 should be .060 to .080 inches (1.5 to 2 mm), retighten bolts. The anvil adjustment handle can be removed if it is stopping the anvil from reaching the correct knife clearance. If removed keep the anvil adjustment handle for later use. If the anvil is rotated or flipped to a new working edge, apply Loc-Tite 241 (blue) on the anvil adjustment handle and set screw. Make sure bolts are torqued to their specific bolt torques refer to bolt torques on page 40. Carefully rotate the chipper disc to make sure all the knives clear the anvil.

PROPER PROCEDURE FOR INSTALLATION AND REMOVAL OF J.B. COUPLERS AND TAPERED FEEDWHEEL MOTORS

A. **Proper Equipment Needed:**

1. Feedwheel motor with tapered shaft.
2. 5/16” x 9/32” x 1 1/4” long key (900-3937-23) for “DT” motor.
   5/16” x 9/32” x 15/16” long key (900-3934-06) for “RE” motor.
   3/16” x 3/16” x 3/4” long key (900-3937-03) for “RS” motor.
3. Correct feedwheel shaft, coupler and taper pin ass’y
4. Loc-Tite 271 (red).
5. Loc-Tite 241 (blue).
6. Emery cloth and/or a file.
7. A degreaser agent.
8. Self locking nut.
9. Hammer.
10. Torque wrench and
    1 5/8” socket for “DT” motor.
    1 3/8” socket for “RE” motor.
    1 3/16” socket for “RS” motor.
11. 1 1/16” hand wrench for “RE” motor.
    7/8” hand wrench for “RS” motor.

B. **Installation Procedure**

1. Remove any sharp edges on the coupler bores or the motor shaft.
   Example: Emery cloth or file for burrs on keyways or shafts.
2. Clean the coupler bores and motor shaft with a degreasing solvent.
3. Install the correct key in the feedwheel motor shaft.
4. Slide the coupler onto the motor shaft, making sure that the two mate tightly.
   Example: The coupler does not rock or slop on the shaft.
5. Install the self locking nut with Loc-Tite 271 on the threads.
6. Tighten to the correct torque, 340 ft.-lbs. (461 Nm) for “DT” motor, 250-300 ft.-lbs. (339-407 Nm) for “RE” motor, & 150-170 ft.-lbs. (203-230 Nm) for “RS” motor.
7. Slightly tap with a hammer on the coupler face to insure proper seating.
8. Retorque self locking nut.
9. Deburr and degrease the feedwheel shaft.
10. Install the motor and coupler assembly onto the feedwheel shaft.
11. Install the correct tapered pin through the coupler and feedwheel shaft.
12. If coupler pin is threaded and is equipped with a nut, make sure the nut is flush with top of pin.
13. Hammer the pin into the coupler to secure the coupler and feedwheel shaft. If the pin is threaded and has a nut do not hammer the pin directly, use a piece of wood as a buffer.
14. If the tapered pin is equipped with a nut, put Loc-Tite 241 on the threads and then tighten nut flush with top of pin.

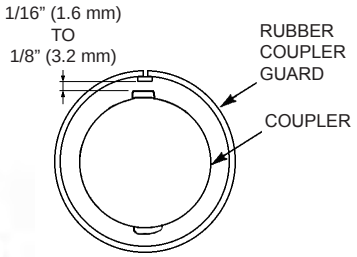

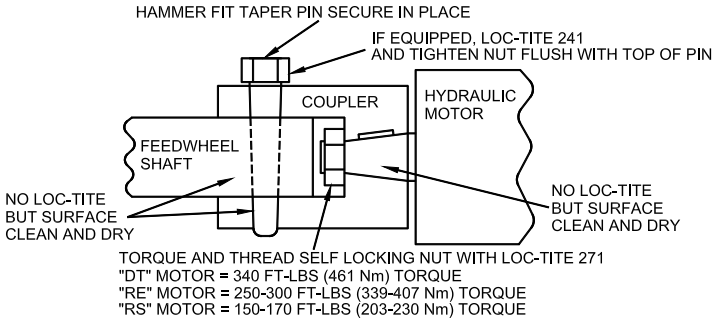

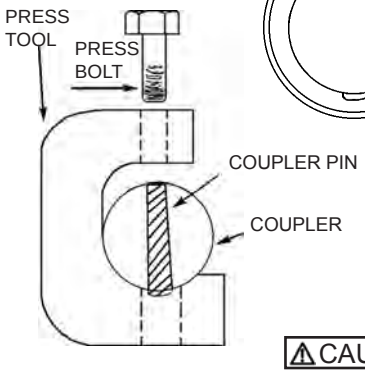

Removal if tapered pin is equipped with a nut to assist in pin removal: Use a hand wrench and turn the tapered pin nut clockwise, half a turn and then hit the small end of the tapered pin with a hammer and punch. Repeat this process until pin is removed.

PRESS TOOL FOR COUPLER PIN REMOVAL
Part Number 981-0501-66 for “DT” Motor
Part Number 981-0501-61 for “RE” and “RS” Motor

⚠CAUTION Always wear proper safety equipment and take caution with tapered pin when attempting to remove. The use of this tool will assist in the removal of the tapered pin in the feedwheel coupler. Lubricate end of bolt and threads with grease. Position the press tool so that it cradles the coupler, with the large end of the tapered pin at the side opposite the press bolt. You may want to remove yoke springs to get easier access to coupler. Set the tool as described and hand tighten press bolt to snug tool against coupler. Make sure press bolt is set on small end of tapered pin, and that pin will go through hole in tool without interference. Use of a 1/2” impact wrench is recommended. Run impact on bolt to start pin removal, then usually a good hit with hammer on the end of bolt will knock out the pin. You may have to run impact on bolt and hit with hammer a few times to remove pin. Do not spend excessive time trying to remove the pin and coupler. If problems occur during pin and coupler removal, contact your nearest dealer or Bandit Industries.

SERVICING / CHANGING FEEDWHEEL BEARING
(WITH THE GRIP TIGHT BEARING BEHIND FEEDWHEEL MOTOR)

Your Bandit Chipper maybe equipped with a tapered lock style (Grip Tight) feedwheel bearing on the hydraulic motor side of the feedwheel and a conventional (set screw) style on the opposite side. With the Grip Tight bearing this gives a very positive locking system to the feedwheel shaft. The set screws on both bearings should still be checked as part of normal maintenance.

A few simple rules and installation instructions must be followed if the bearings ever need to be replaced or removed during service.

The machine is set up with one set screw bearing and one Grip Tight bearing because the one Grip Tight bearing is all that is needed to securely hold the feedwheel shaft (along with the set screws on the opposite bearing). This also makes for very easy assembly. **When installing the bearing it is very important to install and lock the Grip Tight bearing first with the set screw bearing done after.** This is to keep the bearings from being put into a side load which will lead to premature failure.

Installation procedure:

1) Clean the feedwheel shaft of all debris, use a degreaser.

2) Install both feedwheel bearings on the feedwheel shaft with the Grip Tight bearing on the hydraulic motor side and the set screw bearing on the opposite side. **Do not lock the bearings on the shaft at this time, allow the feedwheel to shift freely for installation.**

3) Position the feedwheel in the yoke mount and install all (8) feedwheel bearing bolts using Loc-Tite 271. These are completely tightened and torqued at this time (refer to bolt torque chart).

4) The feedwheel then needs to be centered in the yoke and then it must be off set 3/16” (4.8 mm) towards the set screw bearing side (away from the hydraulic motor). The weight of the feedwheel needs to be taken off the bearings also.

5) First the Grip Tight bearing lock nut must be tightened by hand as tight as possible (in a clock wise direction). This is the zero reference point. Scribe a line on the lock nut above the adapter slot.

6) Using a spanner wrench or drift pin and hammer, lock the bearing to the shaft by tightening the lock nut in a clock wise direction. Tighten 3/4 to 1 full turn (you may need to block the feedwheel from turning at this time). Now you can tighten the set screws on the Grip Tight bearing. Note: the set screw is only to be tightened to 25 in.-lbs. (2 ft.-lbs.) (2.7 Nm).

7) Now tighten the set screws on the set screw bearing at 20 ft.-lbs (27 Nm).

Grip Tight Bearing

Set Screw Bearing

Copyright 8/07

MAINTENANCE

PROCEDURE FOR UNPLUGGING YOUR CHIPPER

If your chipper is plugging, it is usually caused by allowing the engine to drop below required R.P.M.'s. This can be resolved by simply shutting the feedwheel(s) off when the engine begins to lug down. Operating the engine at speeds lower than full R.P.M.'s causes your chipper to plug. **Always run the chipper at full engine speed.** If your chipper is equipped with the optional autofeed feature, make sure it is set correctly. The setting for the low R.P.M. stop must be high enough not to allow the chipper discharge to plug. Dull chipper knives also contribute to chipper plugging. Dull knives can create slivers and chunks, causing the engine to lug excessively. Both of the aforementioned conditions cause a plugging situation.

STEPS TO FOLLOW WHEN UNPLUGGING YOUR CHIPPER

1. Before attempting any type of maintenance disengage clutch, install clutch lock if equipped, turn off engine, wait for the disc/drum to come to a complete stop, install the disc/drum lock pin, disconnect battery, and make sure the ignition key is in your possession.

2. Make sure the chipper disc/drum is **NOT** turning and then open the hinged portion of the chipper hood.

3. Using gloved hands and some type of raking tool, dig the chips out of the chipper housing.

4. If the discharge chute is plugged, use a raking tool to pull the majority of chips out of the open outlet end of the chute. Then, two people must remove the chute. Do not attempt this with one person, because the chute can fall causing injury. If used properly, a hoist can be used to assist in the removal of the chute.

5. Never allow one person to turn the chipper disc/drum when someone else is working inside the chipper housing. More than likely, the chipper disc/drum will turn hard then loosen causing it to turn faster. If another person is anywhere near the chipper disc/drum, they may be injured.

6. Never turn the chipper disc/drum by hand. Always use a pry bar. This will prevent the person turning the disc/drum from being injured should the disc/drum break loose.

7. Reinstall the discharge chute, mount securely and point it in a safe direction away from anything.

8. Never leave the chipper hood open and try to start the engine in order to engage the chipper disc/drum to blow chips out of the housing, this is very hard on the P.T.O. of the chipper and may burn clutch plates. Also, the flying debris is very dangerous. An exposed chipper disc/drum turning very fast creates an unsafe condition. In other words, **DO NOT** start the chipper with the hood open because it is just too dangerous.

9. Once the disc/drum turns freely, close the chipper hood, insert the hood pin, install the padlock in the hood pin, reinstall the chipper hood engine disable plug, make sure the spring lock for hood pin springs back to the correct operating position on disc chippers, start engine, properly engage clutch and throttle to full speed. Insert a small branch into the feedwheel(s). If the chips discharge properly, the chipper is clear and normal operation may resume.

Copyright 8/07

PAINT CARE

To help keep up the appearance of your Bandit Equipment and reduce the possibility of surface rust follow these steps:

1) The machine should be washed on a regular basis with a non-abrasive mild detergent and then rinsed thoroughly. Do not pressure wash sensitive areas like: decals, gauges, electronic devices, autofeed control, etc.
2) If a stone chip, paint scratch, or paint crack occurs - it should be repaired immediately. Simply sand the edges of the damaged paint area, mask off the surrounding area and apply primer and paint to the dry, clean, and warm surface. This will help keep the damaged area from spreading or getting worse.
3) If you are unable to sand and mask the area, there are containers of primer and paint available. A small brush can be used to touch up the area.
4) Also, primer and most colors of paint are available in aerosol spray cans to simply spray over the effected area after it is cleaned, dry, and warmed. This method is not as reliable as the process in step #2.

It is also reported that some equipment owners polish their machine at least yearly, and keep good mud flaps on their towing trucks.

⚠ DANGER

LOCK OUT ALL ENERGY SOURCES BEFORE SERVICING OR REMOVING GUARDS OR HOODS!

1. Shut off engine/motor.
2. Disengage pto/clutch.
3. Wait for cutter disc/drum to come to a **COMPLETE STOP** (takes at least several minutes).
4. Install disc/drum lock pin.
5. Unplug engine disable plug.
6. Remove padlock from hood pin.
7. Press down and hold hood spring lock pin.
8. Retract hood pin.

DO NOT RESTART UNTIL ALL GUARDS AND HOODS ARE SECURELY AND PROPERLY REINSTALLED

TIRE WEAR DIAGNOSTIC CHART

Wear Pattern		Cause	Action
	Center Wear	Over Inflation	Adjust pressure to particular load per tire catalog
	Edge Wear	Under Inflation	Adjust pressure to particular load per tire catalog
	Side Wear	Not Hauling Trailer Level Bent Axles Wide Tires Wheel Bearings	Must be hauled parallel to ground Replace as needed Characteristic of wide flotation tires Adjust or replace
	Cupping	Out-Of-Balance Wheel Bearings	Check bearing adjustment and balance tires Adjust or replace
	Flat Spots	Wheel Lock Up & Tire Skidding	Avoid sudden stops when possible and adjust brakes.

The wear pattern and tread life of tires involves many variables that the user has control of, but **DOES NOT** fall under faulty manufacture or design.

The following is a list of some causes supplied by tire suppliers and axle manufacturers:

- Misalignment - from rough roads, pot holes, excessive speeds and hitting curbs.
- Tire Width - the wider the tire for flotation, the more uneven the tire wear.
- Tire Air Pressure - to much or too little, for the load.
- Vehicle Hitch Height - if trailer is not level with ground, axle camber is misaligned.
- Maintenance - wheel bearing lubrication and adjustment. Follow axle MFG. instructions.
- Brakes - uneven or misadjusted brakes cause irregular brake activation.

RECOMMENDED BRAKE ADJUSTMENT PROCEDURE PER AXLE MANUFACTURER.

The proper clearance between the shoe and drum surfaces will be set up initially from our factory to assure proper operation during the normal break in period. No further adjustment will be necessary until the vehicle completes the recommended break in period of 200 miles (322 km).

Since all brakes of this type must be burnished or “run in” before their full effectiveness can be achieved, the MFG. maintenance manuals call for readjustment after the first 200 miles (322 km) of operation. This usually allows ample time for the burnishing to take place. Readjustments are not necessary for brakes fitted with self-adjustment features although periodic inspection is suggested.

The following shows the correct adjustment for the MFG. brakes of 12 1/4” diameter.

NOTICE: Clearances that are too small will result in excessive drag and overheating while too much clearance can render the brake nonfunctional.

AXLE SIZE	SIZE	TYPE	DIAMETRAL CLEARANCE	CLICKS TO BACK OFF
7000 LBS.	12 1/4” X 2.5”	Elec. or Hyd.	.040” (1 mm)	7 TO 13
8000 LBS.	12 1/4” X 3.38”	Elec. or Hyd.	.040” (1 mm)	AUTOMATIC ADJUSTING
10,000 LBS.	12 1/4” X 3.38”	Elec. or Hyd.	.040” (1 mm)	AUTOMATIC ADJUSTING
12,000 LBS.	12 1/4” X 5”	Elec. or Hyd.	.040” (1 mm)	AUTOMATIC ADJUSTING

For additional brake adjustment procedures consult the axle manufacturer manual.

HYDRAULIC SECTION

⚠ WARNING

DO NOT GO NEAR HYDRAULIC LEAKS!

High pressure oil easily punctures skin causing serious injury, gangrene, or death. If injured, seek emergency medical help. Immediate surgery is required to remove oil. DO NOT use fingers or skin to check for leaks. Lower load or relieve hydraulic pressure before loosening fittings.

DO NOT operate this machine unless all hydraulic control devises operate properly. They must function, shift and position smoothly and accurately at all times. Faulty controls can cause personal injury!

Hydraulic Fluid Requirements

This machine is equipped with “Petro-Canada Hydrex XV” hydraulic fluid. It is recommended to replace with the same. “Petro-Canada Hydrex XV” is an all season hydraulic fluid. This is a premium performance, long life anti-wear, hydraulic fluid, designed for all season use in heavy duty hydraulic systems. “Petro-Canada Hydrex XV” allows year round use under wide extremes of temperature. It allows the hydraulic system to start at temperatures as low as -40°C/-40°F, under no load conditions and it improves lubrication of hydraulic components at high operating temperatures. It will also help protect against hydraulic failures during the wide temperature swings of spring and fall. To find the closest “Petro-Canada Hydrex XV” dealer call 1-888-284-4572.

Multi Viscosity motor oils are not recommended to mix with “Petro-Canada Hydrex XV” hydraulic oil. AW oils may mix with “Petro-Canada Hydrex XV” hydraulic oil. The following are specifications and authorizations of compatible oils. Only a high quality anti-wear (AW) hydraulic oil containing foam, corrosion, rust and oxidations inhibitors should be used. This viscosity grade depends on the oil temperature in service, based on the climate and operating conditions.

	Hydrex XV	ISO 22, AW	ISO 32, AW	ISO 46, AW	ISO 68, AW	ISO 100, AW
Viscosity Index	>235	>95	>95	>95	>95	>95
Flash Point	>240°C /464°F	>200°C /395°F	>210°C /410°F	>220°C /430°F	>220°C /430°F	>240°C /464°F
Oxidations Stability (ASTM D0943)	>9,000 Hours	>3,000 Hours	>3,000 Hours	>3,000 Hours	>3,000 Hours	>3,000 Hours
Cold Start-up, No Load, Max	-40°C/-40°F	-34°C/-29°F	-26°C/-14°F	-19°C/-3°F	-9°C/16°F	-4°C/24°F

HYDRAULIC SECTION

Alternate hydraulic oils are available, but they do not equal the performance or longevity of the “Hydrex XV” oil. Consult the following information supplied by the oil distributor.

CELCIUS	(C)	-40	-34	-29	-23	-18	-12	-7	-1	+4	+10	+16	+21	+27	+32	+38	+43	+49	+54
FAHRENHEIT	(F)	-40	-30	-15	-10	0	+10	+20	+30	+40	+50	+60	+70	+80	+90	+100	+110	+120	+130

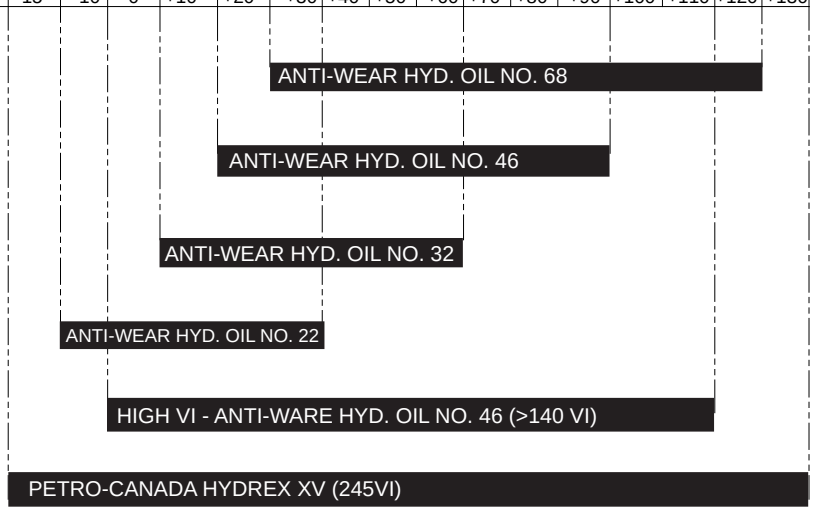

Note: The above chart is a suggested guide for viscosity of hydraulic fluids at start up ambient temperature. The load, demand, and cleanliness of the equipment will affect actual oil temperatures which can increase dramatically above ambient air temperatures during operation. The actual viscosity needed is based on oil temperature during operation and not air temperature. Compare your fluid specifications with the specifications below to verify compliance.

When choosing a hydraulic fluid - these maximum and minimum specifications must be met:

Minimum Viscosity during operation = 12 cSt
Maximum No-Load Viscosity at start-up = 2000 cSt

Hydraulic fluids vary in their resistance to oxidation at elevated temperatures, their ability to protect against metal-to-metal contact under increasing temperature, and their ability to separate water from the fluid. Viscosity is temperature dependant. Fluids with high viscosity-index (VI) will thin out slower at higher temperature and thicken slower at colder temperatures allowing a wider operating range. Choose a fluid that has test results in these areas for best results.

Based on the varying temperatures of the area where Bandit equipment is used, and the high demand and loads placed on this equipment, Bandit has filled each hydraulic system with Petro-Canada’s Hydrex XV All Season Hydraulic Fluid for maximum protection and performance.

Contact Petro Canada at (888) 284-4572 to find a dealer near you.

Note: Some equipment and components such as fluid engagement clutch’s (PTO’s) have their own lubrication requirements. Consult their manufactures manual for that information.

HYDRAULIC SECTION

THE BANDIT HYDRAULIC SYSTEM

The Bandit is equipped with a very efficient, simple hydraulic system. Each component is capable of withstanding a specified PSI (bar) and still operate for a very long time.

If the simple rules mentioned below are followed, the hydraulic components will last for years:

•After you have operated a new machine for approximately an hour shut down the machine and recheck all hydraulic fittings for tightness and leaks.

• Avoid hydraulic pump cavitation. Low oil levels or cold start-ups will cause the hydraulic pump to cavitate. Cavitation will ruin the pump and possibly the entire hydraulic system. Cavitation only has to happen once. This will start the pump on its way to ruin. Allow hydraulic system to turn slowly for several minutes in cold weather in order for hydraulic system to warm up. Cavitation is not covered under warranty.

• Do not increase the feedwheel relief valve settings beyond specified PSI (bar). This will cause damage to hydraulic components. Do not set any other hydraulic component past it's specified pressure or this will cause damage to the hydraulic components.

• Keep hydraulic oil clean. Dirty oil will cause excessive wear and loss of hydraulic power.

• Replace the hydraulic oil filter(s) after first 10 hours and with each 400 hours of operation or 3 months.

• Replace hydraulic oil & suction screen(s) at least once yearly. This is also a very good time to flush and clean the tank. Replace hydraulic oil immediately if it is contaminated or looks "milky".

• If the Bandit's hydraulic system is kept clean and the hydraulic pressures are not increased beyond the specified PSI (bar), the maximum use and life should be received from the Bandit chipper hydraulic system.

• If a problem is encountered, it will more than likely be located in the relief valve or something as simple as belts slipping, check these first.

• Only use the optional adjustable flow control when chipping large diameter trees. Do not leave the speed adjustment partially open for long periods of time. This will cause excessive heat to the hydraulic system! Excessive heat will cause low feedwheel power and premature failure of all hydraulic components. Always operate system at full oil flow unless chipping large diameter trees.

• Do not close the optional hydraulic shut-off valve for more than 3 to 4 seconds. Hydraulic shut-off valve handle must be completely turned on (in line with hose) at all times unless checking hydraulic pressure. Pressure gauge should be safely stored and installed only when checking pressure. Follow above instructions or this will cause unwarranted damage to the hydraulic components.

• Some component manufacturers require different specific hydraulic lubrication, such as gear boxes, undercarriage drives, etc. Refer to their manuals and maintenance section of this manual.

HYDRAULIC COMPONENTS

Feedwheel hydraulic motor(s):
These hydraulic motor(s) are attached to the feedwheel(s) by a tapered feedwheel motor connection.

Hydraulic pump:
The hydraulic pump could be bolted directly to the engine, or may be driven by a sheave/belt combination off of the chipper shaft.

Suction strainer:
This strainer stops contaminants from reaching the hydraulic pump. The suction strainer should be replaced at least once yearly or every 2000 hours.

Hydraulic tank:
This tank must be kept clean and filled minimum 7/8 full. Clean tank yearly.

Filter:
This spin-on cartridge filter must be replaced per maintenance schedule.

Filter mount:
The filter is tightened on the Filter Mount.

Feedwheel valve:
This valve is actuated by the control bar. The valve actuates the feedwheel for forward, off or reverse. It may also contain an adjustable relief valve.

MODEL 250

TYPICAL HYDRAULIC RELIEF PRESSURE SETTINGS
TYPICAL HYDRAULIC FLOWS AND RPM SETTINGS
(Approximate, For Reference Only, Engine At Full RPM)

Equipment Model	250 With 7 1/2" Dia. Feedwheels	250 With 10 1/2" Dia. Feedwheels	250 90 Ft./Min. 10 1/2" Dia. Feedwheels	250 PTO 540 RPM 7 1/2" Dia. Feedwheels	250 PTO 1000 RPM 7 1/2" Dia. Feedwheels	250 PTO 1000 RPM 7 1/2" Dia. Feedwheels	250 PTO 1000 RPM 10 1/2" Dia. Feedwheels
Pump GPM (LPM)	8.0 (30.3)	12.0 (32.2)	8.5 (32.2)	8.0 (30.3)	8.5 (32.2)	12.0 (32.2)	12.0 (32.2)
Top Feedwheel GPM (LPM)	4.0 (15.1)	6.0 (22.7)	4.25 (16.1)	4.0 (15.1)	4.25 (16.1)	6.0 (22.7)	6.0 (22.7)
Bot. Feedwheel GPM (LPM)	4.0 (15.1)	6.0 (22.7)	4.25 (16.1)	4.0 (15.1)	4.25 (16.1)	6.0 (22.7)	6.0 (22.7)
Feedwheel RPM	59 - 60	42 - 43	30 - 31	59 - 60	63 - 64	39 - 40	39 - 40
If Equipped Main Relief PSI (bar)	2500 (172)	2500 (172)	2500 (172)	2500 (172)	2500 (172)	2500 (172)	2500 (172)
Feed Relief PSI (bar)	2500 (172)	2500 (172)	2500 (172)	2500 (172)	2500 (172)	2500 (172)	2500 (172)
Yoke Relief PSI (bar)	1200-1500 (83-103)	1200-1500 (83-103)	1200-1500 (83-103)	1200-1500 (83-103)	1200-1500 (83-103)	1200-1500 (83-103)	1200-1500 (83-103)
Winch Relief PSI (bar)	2200 (152)	2200 (152)	2200 (152)	2200 (152)	2200 (152)	2200 (152)	2200 (152)
Disch. Rotate PSI (bar)	500-800 (34-55)	500-800 (34-55)	500-800 (34-55)	500-800 (34-55)	500-800 (34-55)	500-800 (34-55)	500-800 (34-55)
Disch. Flipper PSI (bar)	400 (28)	400 (28)	400 (28)	400 (28)	400 (28)	400 (28)	400 (28)
Tongue Jack PSI (bar)	2200 (152)	2200 (152)	2200 (152)	N/A	N/A	N/A	N/A

NOTICE

DO NOT UNDER ANY CIRCUMSTANCES OVER-SET THESE RELIEF PRESSURES, BECAUSE IT WILL CAUSE DAMAGE TO COMPONENT PARTS AS WELL AS HYDRAULIC PARTS.

NOTE: These Typical Hydraulic Flows And Relief Pressure Settings Are With The Engine At Full RPM. All Settings Are Subject To Change!

Copyright 8/07

MODEL 254

TYPICAL HYDRAULIC RELIEF PRESSURE SETTINGS
TYPICAL HYDRAULIC FLOWS AND RPM SETTINGS
(Approximate, For Reference Only, Engine At Full RPM)

Equipment Model	254 2-Knife	254 3-Knife
Pump GPM (LPM)	10.0 (37.9)	12.0 (45.4)
Top Feedwheel GPM (LPM)	5.0 (18.9)	6.0 (22.7)
Bot. Feedwheel GPM (LPM)	5.0 (18.9)	6.0 (22.7)
Feedwheel RPM	36 - 37	44 - 45
If Equipped Main Relief PSI (bar)	2500 (172)	2500 (172)
Feed Relief PSI (bar)	2500 (172)	2500 (172)
Yoke Relief PSI (bar)	1200-1500 (83-103)	1200-1500 (83-103)
Winch Relief PSI (bar)	2200 (152)	2200 (152)
Disch. Rotate PSI (bar)	500-800 (34-55)	500-800 (34-55)
Disch. Flipper PSI (bar)	400 (28)	400 (28)
Tongue Jack PSI (bar)	2200 (152)	2200 (152)

NOTICE

DO NOT UNDER ANY CIRCUMSTANCES OVER-SET THESE RELIEF PRESSURES, BECAUSE IT WILL CAUSE DAMAGE TO COMPONENT PARTS AS WELL AS HYDRAULIC PARTS.

NOTE: These Typical Hydraulic Flows And Relief Pressure Settings Are With The Engine At Full RPM. All Settings Are Subject To Change!

HYDRAULIC SECTION

THE BANDIT CHIPPER IS EQUIPPED WITH ONE OF THREE POSSIBLE MAIN RELIEF HYDRAULIC PRESSURE ADJUSTMENT PROCEDURES

PROCEDURE 1 FOR MODELS 250/254 WITH NO OPTIONS

The relief valve is typically located internally in the control valve. Do not adjust this relief valve above 2500 PSI (172 bar). The relief valve system is a simple spring tension design but small pieces of debris can stick the valve partially open which weakens the feedwheel power. The relief as well as hydraulic oil, and screen must be kept clean.

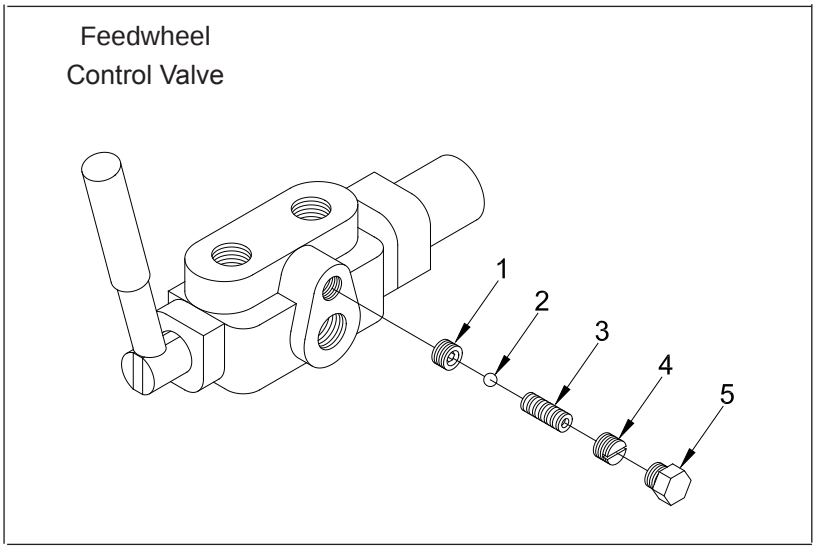

1. **VALVE SEAT:**
   The springs pushes the relief valve ball against it, until pressure builds.
2. **POPPIT VALVE:**
   This ball opens and closes to relieve excess pressure on hydraulic system.
3. **RELIEF SPRING:**
   This spring tensions the amount of pressure required to open the relief valve ball. This spring weakens and must be checked and/or readjusted every month for best performance.
4. **SLOTTED SET SCREW:**
   Turn clockwise to increase pressure, but do not surpass maximum of 2500 PSI (172 bar).
5. **HEX HEAD PLUG:**
   Remove to access the relief valve.

YOUR BANDIT CHIPPER IS EQUIPPED WITH ONE OF THREE HYDRAULIC PRESSURE ADJUSTMENT PROCEDURE OPTIONS.

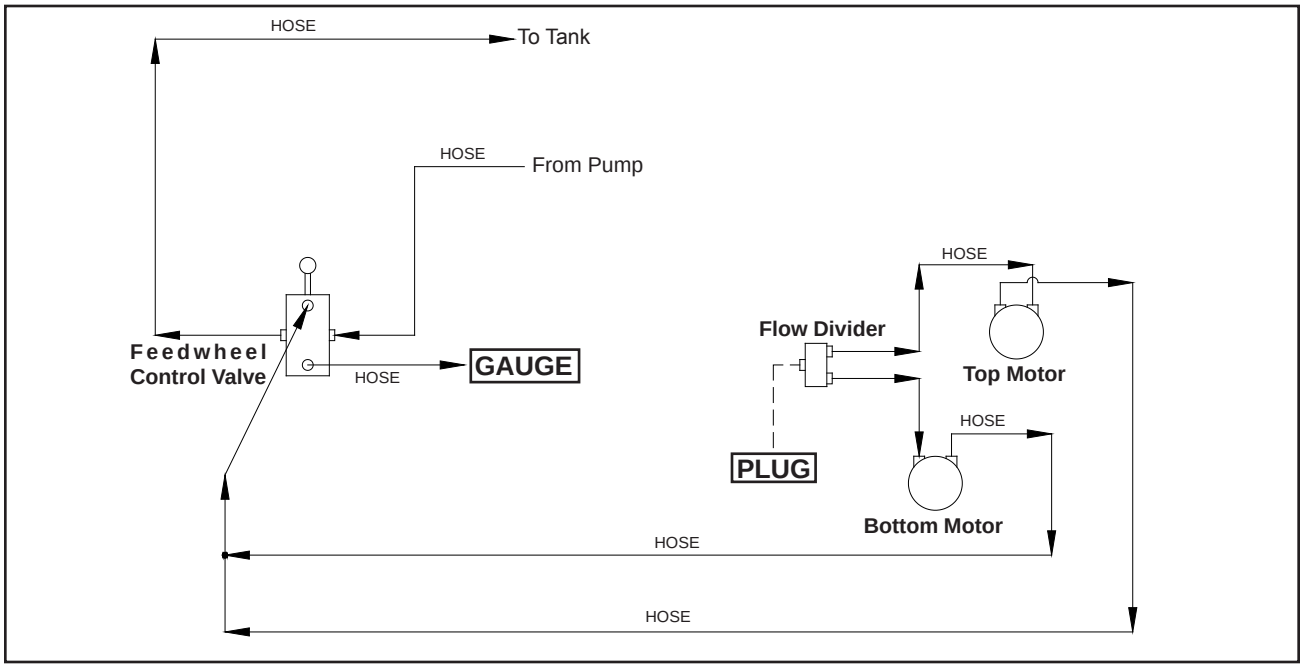

⚠ WARNING

PROCEDURE 1 FOR MODELS 250/254 WITH NO OPTIONS cont.

CHECKING AND ADJUSTING RELIEF VALVE PRESSURE

Before attempting any hydraulic pressure settings, make sure engine is shut off, engine key removed and in your possession, hydraulic oil is clean, hydraulic tank is 7/8 full, and the machine has been pre-run to warm the hydraulic oil. To correctly check relief valve pressure, gauge MUST be installed correctly.

1. First put control handle in off position.
2. Disconnect flow divider from control valve, and plug port on flow divider.
3. Leave all other hydraulic hoses connected.
4. Install pressure gauge in port on control valve from which flow divider was disconnected.
5. Start engine, and engage control handle to normal operating position.
6. Adjust engine to full throttle to activate reading on pressure gauge.
7. Pressure gauge should read maximum 2500 PSI (172 bar).
   ONLY RUN ENGINE FOR 4-5 SECONDS TO SET PRESSURE OR YOU MAY DAMAGE HYDRAULICS.
8. Readjust relief pressure setting if needed, if not needed, shut off engine remove plug and gauge. Reassemble flow divider to control valve.
9. Check for hydraulic leaks.
10. Relief valve pressure should be checked and/or readjusted every month for best performance.

MAINTAIN FEEDWHEEL HYDRAULIC PRESSURE AT 2500 PSI (172 bar).

YOUR BANDIT CHIPPER IS EQUIPPED WITH ONE OF THREE HYDRAULIC PRESSURE ADJUSTMENT PROCEDURE OPTIONS.

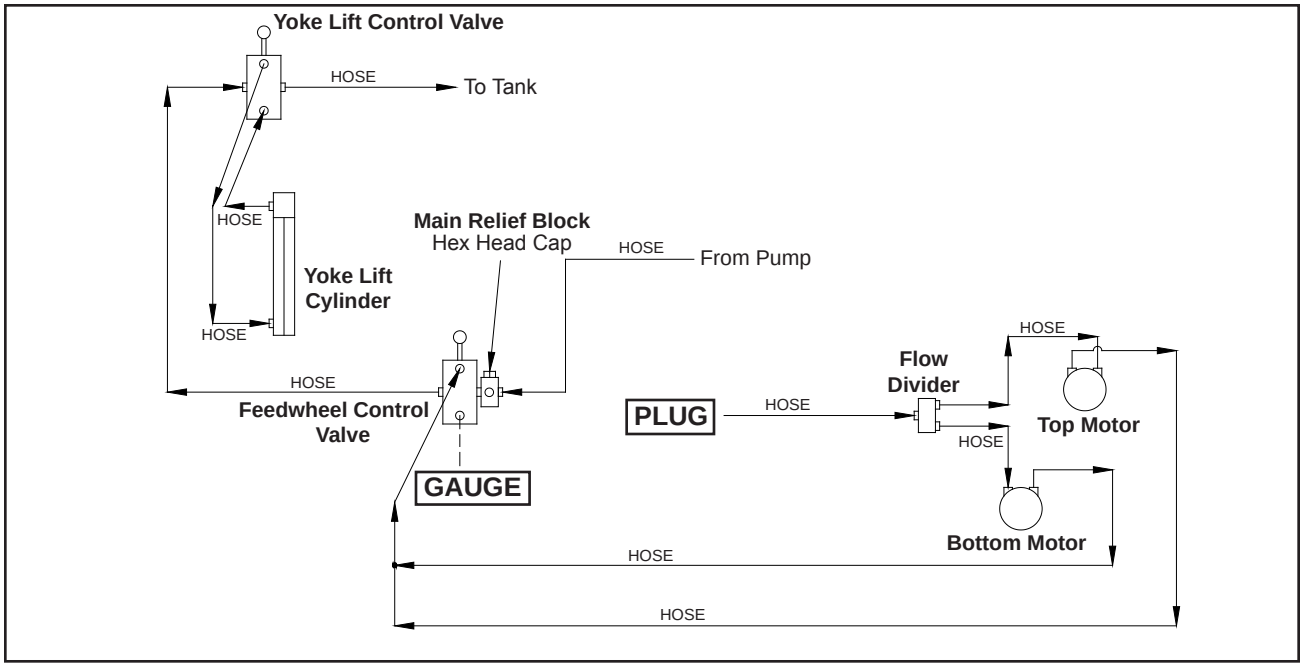

⚠ WARNING

PROCEDURE 2 FOR MODELS 250/254 WITH OPTIONS

(SHOWN WITH LIFT CYLINDER OPTION)

Before attempting any hydraulic pressure settings, make sure engine is shut off, engine key removed and in your possession, hydraulic oil is clean, hydraulic tank is 7/8 full, and the machine has been pre-run to warm the hydraulic oil. To correctly check relief valve pressure, gauge MUST be installed correctly.

1. First put control handle in off position.
2. Disconnect hydraulic hose going from flow divider to feedwheel control valve at the feedwheel control valve end.
3. Leave all other hydraulic hoses connected.
4. Install pressure gauge in port on feedwheel control valve where you disconnected the hose and plug the end of the hose.
5. Start engine, engage control handle to normal operating position, and adjust engine to full throttle to activate reading on pressure gauge.
6. Pressure gauge should read maximum 2500 PSI (172 bar).
   ONLY RUN ENGINE FOR 4-5 SECONDS TO SET PRESSURE OR YOU MAY DAMAGE HYDRAULICS.
7. Readjust relief pressure setting by first removing hex head cap, then loosen jam nut, finally use an allen wrench to adjust pressure setting, if needed. If not needed, shut off engine and remove the plug and gauge.
8. Reassemble hose from flow divider to feedwheel control valve.
9. Check for hydraulic leaks.
10. Relief valve pressure should be checked and/or readjusted every month for best performance.

MAINTAIN FEEDWHEEL HYDRAULIC PRESSURE AT 2500 PSI (172 bar).

YOUR BANDIT CHIPPER IS EQUIPPED WITH ONE OF THREE HYDRAULIC PRESSURE ADJUSTMENT PROCEDURE OPTIONS.

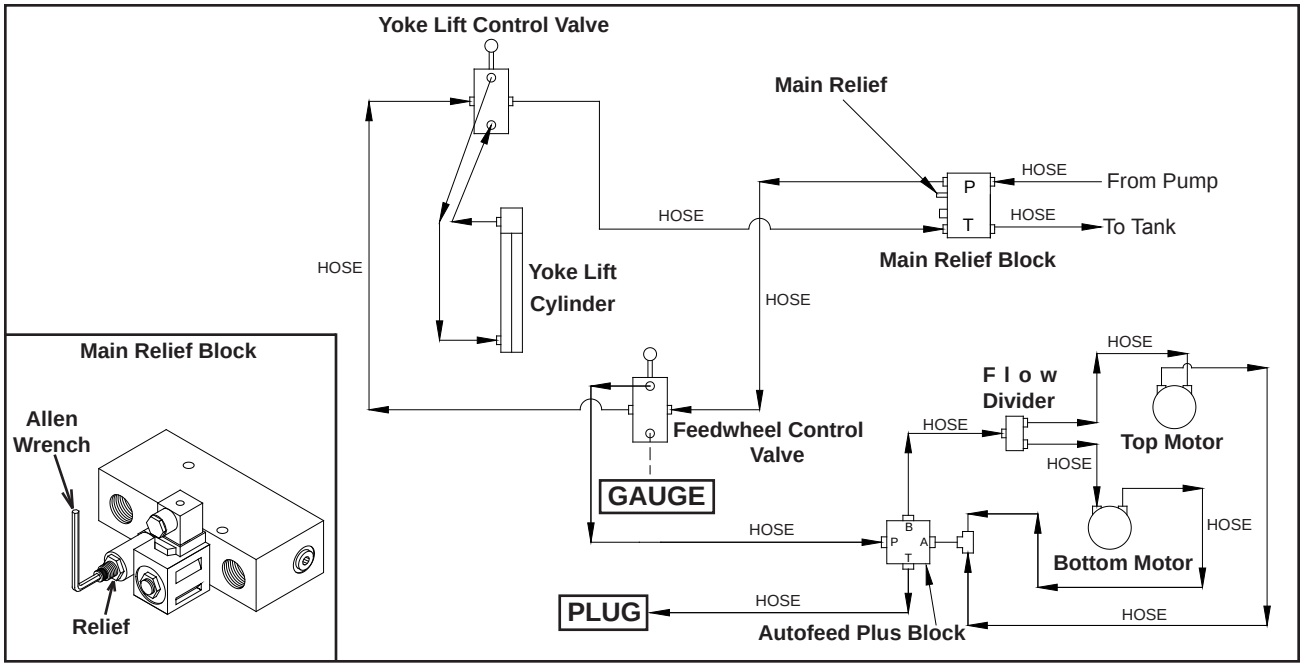

⚠ WARNING

PROCEDURE 3 FOR MODELS 250/254 WITH OPTIONS

(SHOWN WITH AUTOFEED PLUS AND LIFT CYLINDER OPTIONS COMBINED)

Before attempting any hydraulic pressure settings, make sure engine is shut off, engine key removed and in your possession, hydraulic oil is clean, hydraulic tank is 7/8 full, and the machine has been pre-run to warm the hydraulic oil. To correctly check relief valve pressure, gauge MUST be installed correctly.

1. First put control handle in off position.
2. Disconnect hydraulic hose going from autofeed plus block (or from flow divider if machine not equipped with autofeed plus) to feedwheel control valve at the feedwheel control valve end.
3. Install pressure gauge in port on feedwheel control valve where you disconnected the hose and plug the end of the hose.
4. Start engine and adjust engine to full throttle to activate reading on pressure gauge.
5. Pressure gauge should read maximum 2500 PSI (172 bar).
   ONLY RUN ENGINE FOR 4-5 SECONDS TO SET PRESSURE OR YOU MAY DAMAGE HYDRAULICS.
6. Locate relief next to autofeed solenoid, loosen jam nut, use an allen wrench to readjust relief pressure setting if needed, and then retighten jam nut.
7. Reassemble hose from autofeed plus block (or from flow divider) to feedwheel control valve.
8. Check for hydraulic leaks.
9. Relief valve pressure should be checked and/or readjusted every month for best performance.

MAINTAIN FEEDWHEEL HYDRAULIC PRESSURE AT 2500 PSI (172 bar).

Copyright 8/07

PROCEDURE FOR CHECKING OPTIONAL HYDRAULIC COMPONENTS

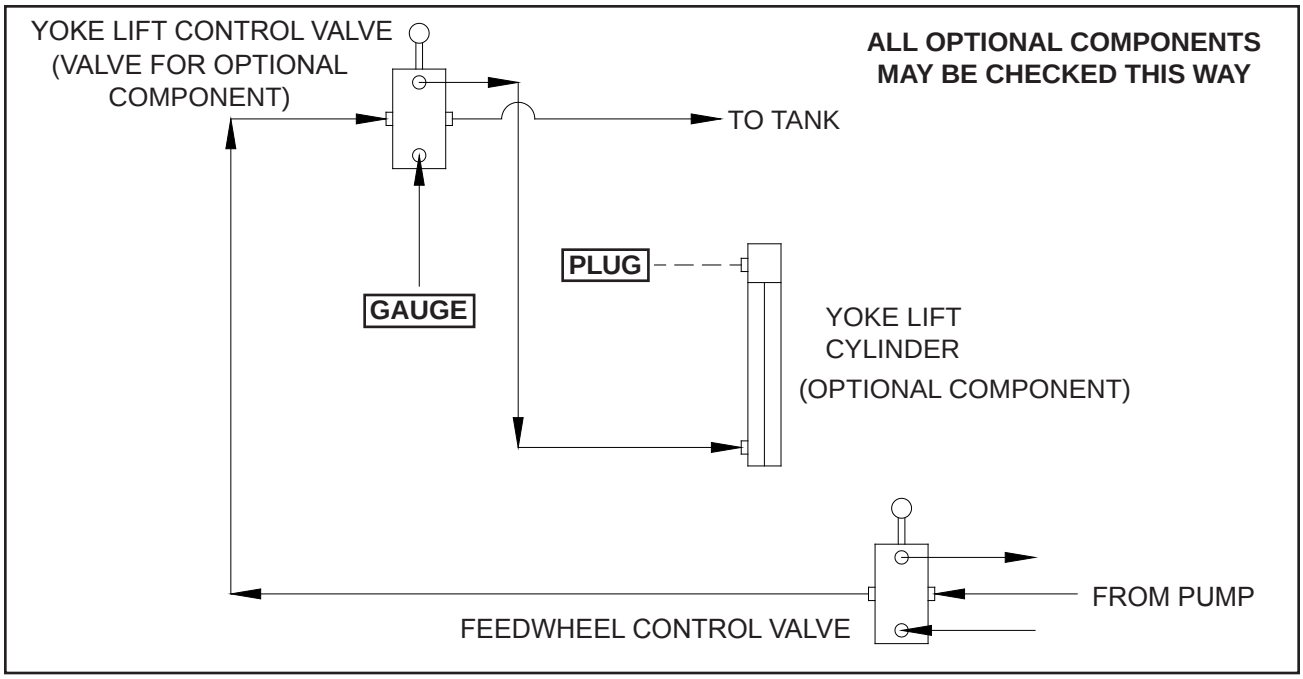

⚠ WARNING

MODELS 250/254 PROCEDURE

Before attempting any hydraulic pressure settings, make sure engine is shut off, the ignition key is removed and in your possession, hydraulic oil is clean, hydraulic tank is 7/8 full, and the machine has been pre-run to warm the hydraulic oil. To correctly check relief valve pressure, the pressure gauge MUST be installed correctly.

1. First put control handle in off position.
2. Disconnect hose coming out of the port farthest from the handle of the control valve from the optional motor or cylinder, and plug the hose.
3. Leave all other hydraulic hoses connected.
4. Install pressure gauge in the valve port which had the hose of the optional motor or cylinder disconnected.
5. Start engine and adjust engine to full throttle to activate reading on pressure gauge.
6. Only operate the valve for that component to activate pressure gauge. Pressure gauge should read the maximum specified PSI (bar) for that component, see pages 55 - 56.
   ONLY RUN ENGINE FOR 4-5 SECONDS TO SET PRESSURE OR YOU MAY DAMAGE HYDRAULICS.
7. Readjust relief pressure setting if needed, if not needed, shut off engine and remove plug and pressure gauge. Reassemble control valve to optional motor or cylinder.
8. Check for hydraulic leaks.
9. Relief valve pressure should be checked and/or readjusted every month for best performance.

MAINTAIN HYDRAULIC PRESSURE TO THE SPECIFIED PSI (bar).

HYDRAULIC SYSTEM TROUBLE SHOOTING

Before attempting any type of maintenance disengage clutch, turn off engine, wait for the disc/drum to come to a complete stop, install the disc/drum lock pin, disconnect battery, and make sure the ignition key is in your possession!

PROBLEM	POSSIBLE CAUSE	SOLUTION
Feedwheel(s) turn at normal speed but does not chip wood properly	1. Dull Knives 2. Worn feed teeth 3. Low feedwheel relief valve setting 4. Pump is worn 5. Motor is weak 6. Feedwheel springs too loose	1. Replace knives 2. Replace 3. Readjust to specified PSI (bar) 4. Replace 5. Replace 6. Adjust
Feedwheel(s) slow or stop when feeding	1. Dull knives 2. Relief valve is worn or dirty 3. Pump is worn 4. Motor is worn 5. Feedwheel springs too tight 6. Feedwheel slide box sticking or hanging up	1. Replace knives 2. Clean, reset or replace 3. Replace 4. Replace 5. Adjust 6. Lubricate
Feedwheel(s) turn slowly or not at all	1. Relief valve stuck open 2. Worn hydraulic motor 3. Pump is worn 4. Feedwheel Relief pressure off 5. Pinched or damaged hydraulic hose 6. Feedwheel valve (control valve) worn & leaking internally 7. Low hydraulic oil level 8. Plugged oil screen 9. Binding such as worn bearings, etc. 10. Control lever improperly shifting valve	1. Clean or replace 2. Replace 3. Replace 4. Reset to specified PSI (bar) 5. Replace 6. Replace 7. Fill 7/8 full minimum 8. Replace 9. Repair 10. Readjust, valve must open completely
Hydraulic oil very hot, causing system to operate slowly	1. Dull knives 2. Low oil level 3. Pump is worn 4. Relief valve stuck open or opens easily 5. Damaged hose 6. Oil suction screen or filter plugged 7. Oil cooler plugged, if equipped 8. Motor is worn 9. Binding 10. Operator running oil over relief too much	1. Replace knives 2. Fill 7/8 full minimum 3. Replace 4. Clean, reset or replace 5. Replace 6. Clean or replace 7. Clean 8. Replace 9. Repair 10. Don't

MAINTAIN FEEDWHEEL HYDRAULIC PRESSURE AT SPECIFIED PSI (bar).

Follow typical hydraulic flow and relief settings on pages 55 - 61.
Follow proper hydraulic oil requirements on pages 52 - 53.

Copyright 8/07

CORRECTING HYDRAULIC PROBLEMS

Before attempting any type of maintenance disengage clutch, turn off engine, wait for the disc/drum to come to a complete stop, install the disc/drum lock pin, disconnect battery, and make sure the ignition key is in your possession!

COMPONENT	PROCEDURE
Checking relief valve setting	Refer to the hydraulic pressure adjustment procedure section of the manual to find the correct procedure for checking relief valve setting. (pgs. 57 - 61)
Adjusting relief valve setting	Refer to the hydraulic pressure adjustment procedure section of the manual to find the correct procedure for adjusting relief valve pressure settings. (pgs. 57 - 61)
Cleaning relief valve (with engine shut off)	1. Remove plug from feedwheel valve (control valve), see illustration of relief valve components. (pg. 57) 2. Unscrew slotted set screw completely out of the valve. 3. Remove poppit spring. 4. Remove poppit ball. 5. Clean all parts, inspect for damage and blow out relief hole with air. 6. Reassemble, set and maintain feedwheel hydraulic pressure at specified PSI (bar).
Checking for defective pump	1. See pages 64 - 65 on how to check a hydraulic pump.
Checking for defective motor	1. If everything checks out as correct, it may be time to check the hydraulic motor. 2. If your machine has Live Hydraulics, see page 66 on how to check a hydraulic motor. 3. If your machine does not have Live Hydraulics, contact your local dealer or Bandit Industries for instructions.

NOTE: When returning hydraulic components for warranty make sure to box up all warranted parts to avoid additional damage while shipping. **Do not disassemble any hydraulic components which are to be warranted.** Anything which has been disassembled or tampered with will not be warranted. Items being returned must be clean. All hydraulic components must have all hosing ports plugged. Failure to plug ports will allow debris to enter components which will void warranty.

MAINTAIN FEEDWHEEL HYDRAULIC PRESSURE AT SPECIFIED PSI (bar).

Follow typical hydraulic flow and relief settings on pages 55 - 61.
Follow proper hydraulic oil requirements on pages 49 - 50.

Copyright 8/07

HYDRAULIC PUMP CHECK OUT

HYDRAULIC PUMP CHECK OUT WITHOUT USING A FLOW METER

To check out the hydraulic pump the mechanic will need a needle type flow control valve, a pressure gauge capable of reading 3000 psi (207 bar) and a long enough hose that will span between the pump and the hydraulic tank.

1) Disconnect the pressure line going from the pump at the first component and cap the fitting at the component.
2) Attach a Tee fitting to the end of the pressure hose (which was removed from the component) and install the Tee fitting and gauge.
3) Attach the hydraulic flow control valve to the Tee fitting and the hose (you supply) to the outlet port of the flow control valve.
4) **Make sure the pressure gauge is installed up stream from the flow control valve. Failure to do this will cause serious damage to the hydraulic pump when testing.**
5) If the hydraulic oil tank is equipped with a mesh strainer in the fill neck, remove it and place the open end of the hose (you supply) into the tank fill neck.
6) **MAKE SURE THAT THE FLOW CONTROL VALVE IS FULLY OPEN SO AS TO ALLOW UNRESTRICTED FLOW TO PASS THROUGH IT.**
7) Start the engine to engage the pump, the clutch may have to be engaged if the pump is belt driven.
8) Have a second person lift the hydraulic hose far enough out of the tank inlet to observe the flow of oil going into the tank. Observe the pressure gauge reading to make sure a high pressure does not exist.
9) Increase the engine speed slowly to full rpm and at the same time observe the pressure. This should still remain low.
10) **SLOWLY** turn the needle valve on the flow control in and observe the pressure increase on the pressure gauge.
11) Continue closing the flow control valve until the pressure gauge reading reaches 90% of the normal relief valve setting (example: if system operates at 2500 psi (172 bar), do not exceed 2250 psi (155 bar). **Never allow the pressure to go more than 90% of the main relief pressure.**
12) If the pump is good there should be no noticeable decrease in the flow rate coming out of the hose and into the hydraulic tank.
13) If 90% of the main relief pressure can not be obtained and/or the flow rate of the hose is considerably less, then the pump is worn or damaged.

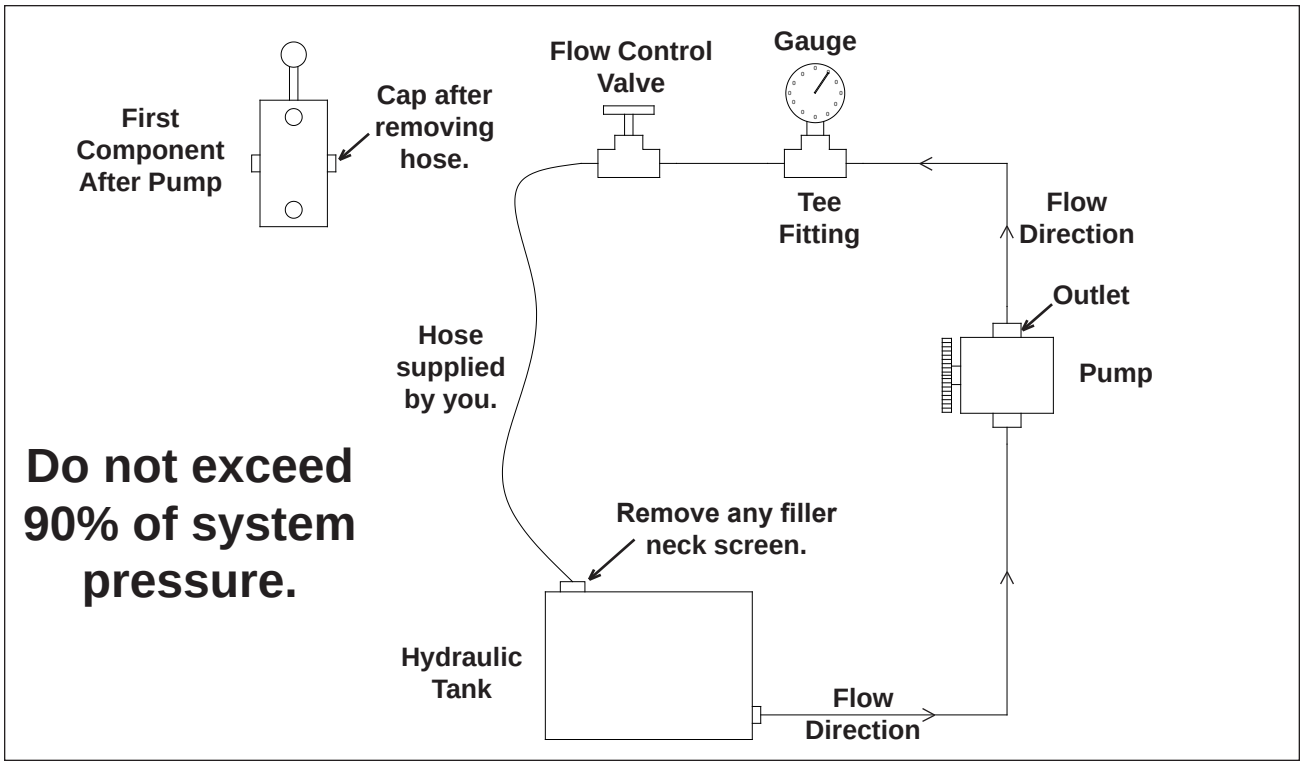

Copyright 8/07

HYDRAULIC PUMP CHECK OUT

HYDRAULIC PUMP CHECK OUT USING A FLOW METER

To check out the hydraulic pump the mechanic will need a needle type flow meter capable of reading 3000 psi (207 bar) and a long enough hose that will go from the flow meter back to the first component.

1) Disconnect the pressure line going from the pump at the first component.
2) Attach the flow meter to the end of the pressure hose (which was removed from the component).
3) Attach the hose you supplied to the outlet of the flow meter and run the hose back to the first component. **MAKE SURE THE HOSES ARE ON THE CORRECT SIDES OF THE FLOW METER.**
4) **Make sure the pressure gauge is installed up stream from the flow control valve. Failure to do this will cause serious damage to the hydraulic pump when testing.**
5) **MAKE SURE THAT THE FLOW CONTROL VALVE IS FULLY OPEN SO AS TO ALLOW UNRESTRICTED FLOW TO PASS THROUGH IT.**
6) Start the engine to engage the pump, the clutch may have to be engaged if the pump is belt driven.
7) Observe the flow rate through the meter and pressure gauge reading to make sure a high pressure does not exist.
8) Increase the engine speed slowly to full rpm and at the same time observe the pressure and flow rate. The pressure should still remain low. Make a note of the flow rate (gpm or Lpm) at full engine rpm.
9) **SLOWLY** turn the needle valve on the flow control in and observe the pressure increase on the pressure gauge.
10) Continue closing the flow control valve until the pressure gauge reading reaches 90% of the normal relief valve setting (example: if system runs at 2500 psi (172 bar), do not exceed 2250 psi (155 bar). **Never allow the pressure to go more than 90% of the main relief pressure.**
11) If the pump is good, you should have at least 80% of the flow rate (gpm or Lpm) passing through the flow meter as noted at low pressure and full rpm (example: 10 gpm (38 Lpm) and low pressure = 8 gpm (30 Lpm) at 90% pressure).
12) If 90% of the main relief pressure can not be obtained and/or the flow rate passing through the meter is considerably less, then the pump is worn or damaged.

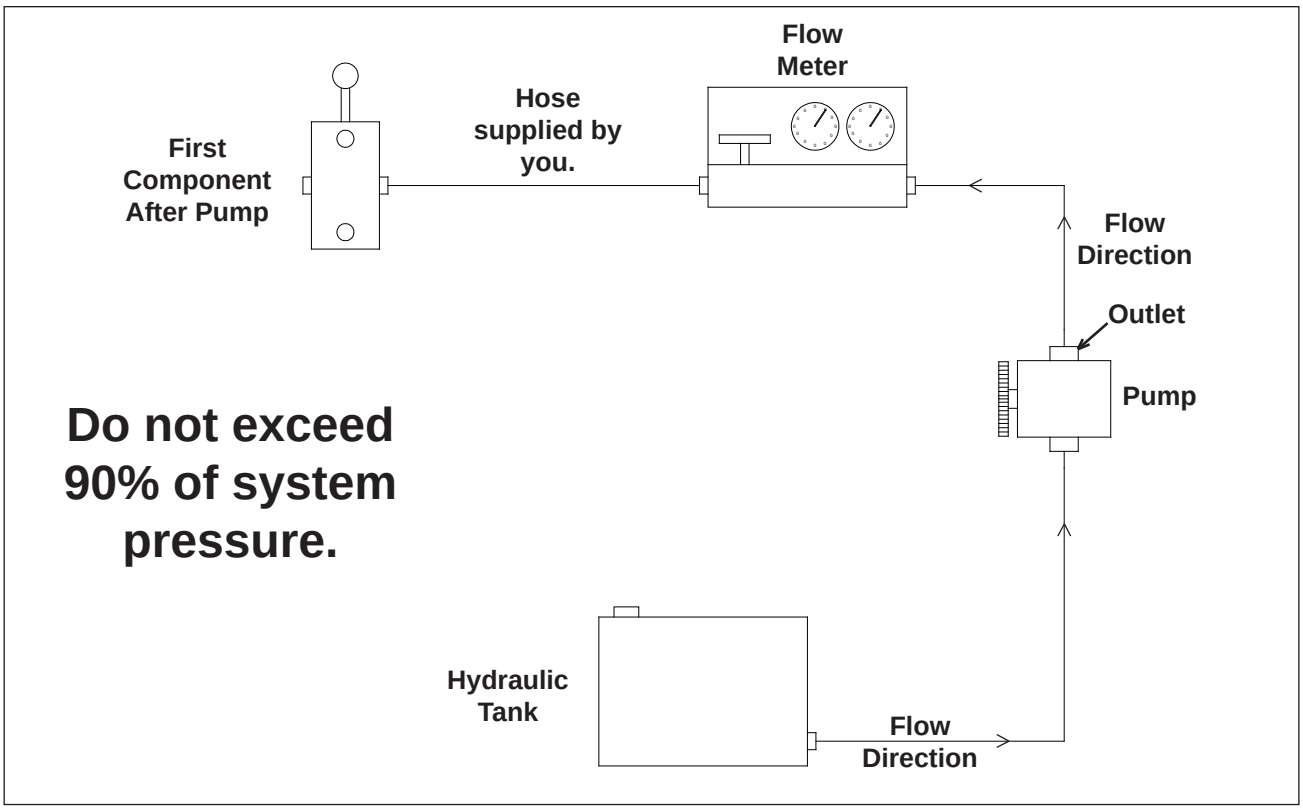

HYDRAULIC MOTOR CHECK OUT

HYDRAULIC MOTOR CHECK OUT FOR MACHINES WITH LIVE HYDRAULICS

To check out a hydraulic motor the mechanic will need a pressure gauge capable of reading 3000 p.s.i. (207 bar), a Tee fitting to install in the control valve, a plug fitting to install in the control valve and a clean 5 gallon (19L) pail.

1) The following instructions are for machines with Live Hydraulics, for machines without Live Hydraulics contact your local dealer or Bandit Industries.
2) In order to check out a hydraulic motor, it is necessary to mechanically stop the motor from turning while under load. The hydraulic pump needs to be driven without turning the chipper disc/drum (Live Hydraulics). Feed a reasonably large size log into the machine until it contacts the stationary disc/drum. This should stall the hydraulic motor(s). It may also be necessary to apply down pressure by operating the yoke control valve (if equipped).
3) With the feedwheel(s) mechanically locked as described and the engine turned off, unhook the hose going from the hydraulic motor back to the control valve at the valve. Some machines will be equipped with a flow divider between the hydraulic motor and the control valve.
4) Place the end of the hose in a clean 5 gallon (19L) pail.
5) Plug the open port in the control valve.
6) Unhook the other hose in the control valve and install a Tee fitting into the control valve and attach the hose to the Tee fitting.
7) Install a pressure gauge in the other port in the Tee fitting to monitor hydraulic pressure.
8) Put the infeed control valve in the center position and start the engine.
9) Increase the engine speed slowly to full rpm.
10) Operate the infeed control valve to feed the log into the stationary disc/drum. If the feedwheel(s) try to turn, apply down pressure by using the yoke control valve (if equipped).
11) Providing the pump and the relief are functioning properly, the pressure gauge should read the specified main relief setting.
12) Observe the amount of hydraulic fluid coming from the hose into the pail. The amount of leakage should not be more than about 1 g.p.m. (3.8 L.p.m.) into the pail.

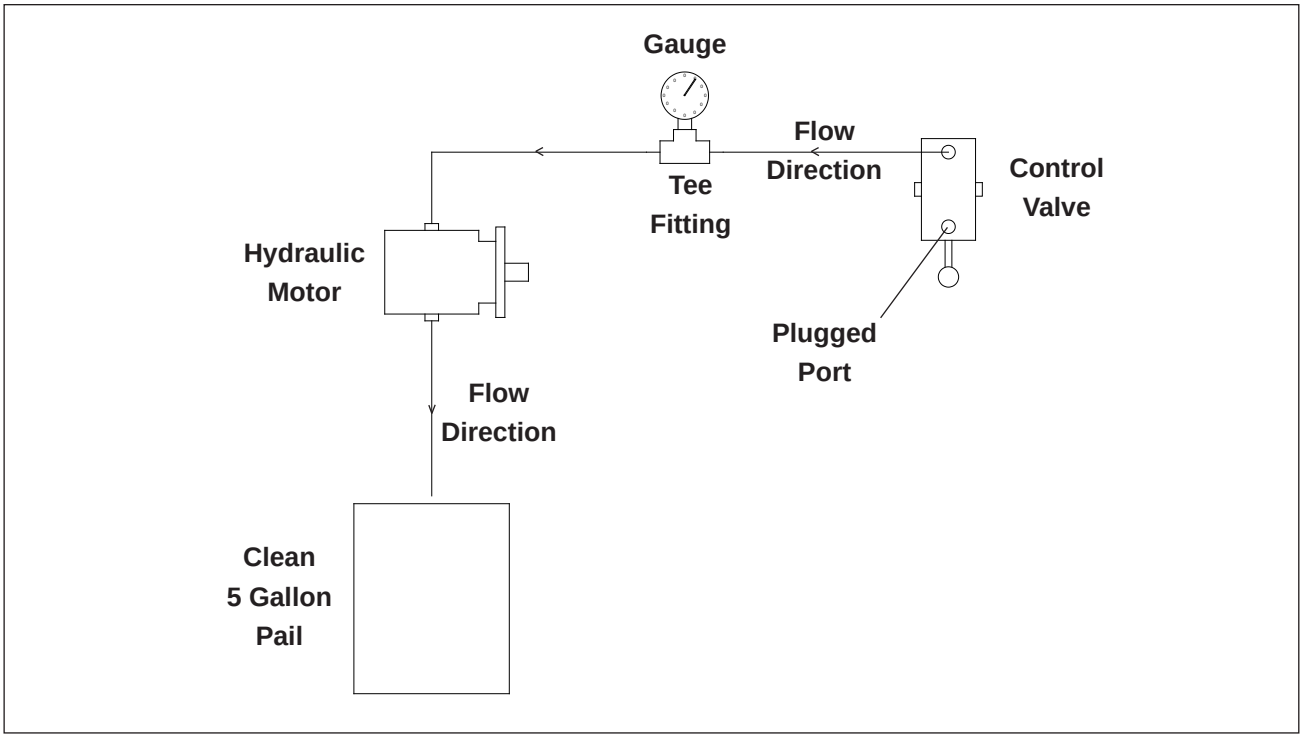

CONTROL VALVE DETENT ASSEMBLY AND O-RING REPLACEMENT

Tools Required:

- Small amount of clean hydraulic oil
- Clean working area, free of debris and shop rags
- 3/16” Tee handle hex driver
- 1/2” drag link drive socket
- Jawed vice

1/2” Drag Link Drive Socket

General Procedure:

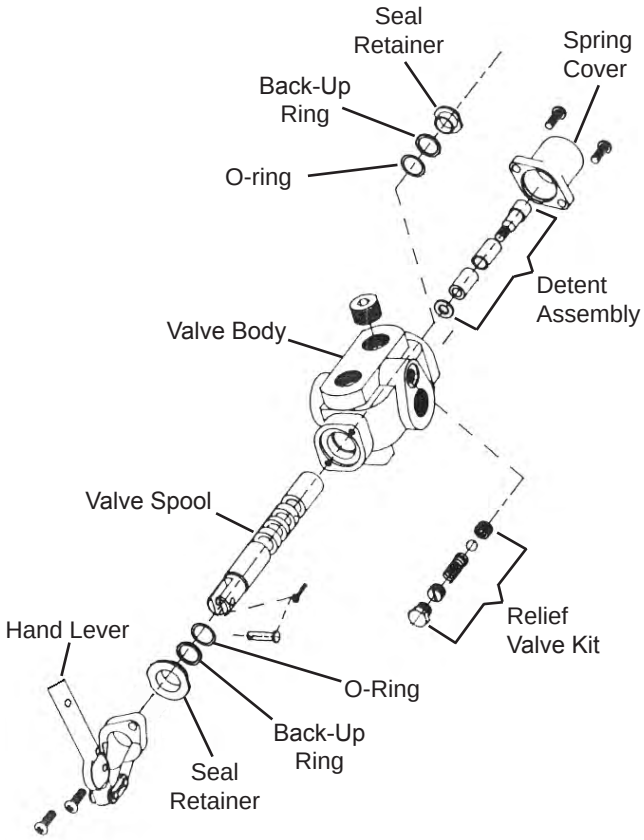

Disassembly:

1) Secure valve in vice or suitable method to firmly hold valve.
2) Note the orientation and placement of all components during disassembly.
3) Using the 3/16” Tee handle hex driver, remove (2) two socket head cap screws which hold the spring cover to the valve body. Set aside for re-use.
4) The detent assembly is now visible. Insert the 1/2” drag link drive socket blade into slot of retaining screw. Loosen and remove the retaining screw along with the entire detent assembly.
5) With the 3/16” Tee handle hex driver, remove (2) two socket head cap screws that hold the control lever assembly to the valve body.
6) Detach hand lever from spool. Carefully remove valve spool from valve body. Take care not to scratch, dent, or nick the spool. Note the orientation of handle attachment point on spool. Set aside for re-use.
7) Remove (2) seal retainers, o-rings, and back-up rings from both ends of the valve.
8) Inspect and replace o-ring and back-up ring if cut, or if leak is suspected.

Assembly:

1) Lubricate spool, o-rings, and back-up rings with clean oil. Insert spool and center it in the valve body.
2) Place the new o-rings and back-up rings over spool ends and seat them into the valve body. Seat the seal retainer onto back-up ring making sure not to pinch the o-ring or back-up ring against the valve body.
3) Re-attach the hand lever to the spool. Mount control lever assembly onto the valve body using the (2) two socket head cap screws.
4) Thread a new detent assembly onto the spool end and hand tighten with the 1/2” drag link drive socket blade. No additional lubricant is required.
5) Mount the spring cover and the (2) socket head cap screws.
6) Hand tighten all (4) four socket head cap screws with the 3/16” Tee handle hex driver.
7) Shift valve with hand lever to assure operation. With some effort, the hand lever should move between three positions. The detent will hold the hand lever in the three positions.

Instructions and illustrations provided by component manufacturer.

Copyright 8/07

SPECIFIC SCHEMATIC FUNCTION MAY VARY DEPENDING
ON OPTIONS OR COMPONENT MANUFACTURE.

WITH NO OPTIONS

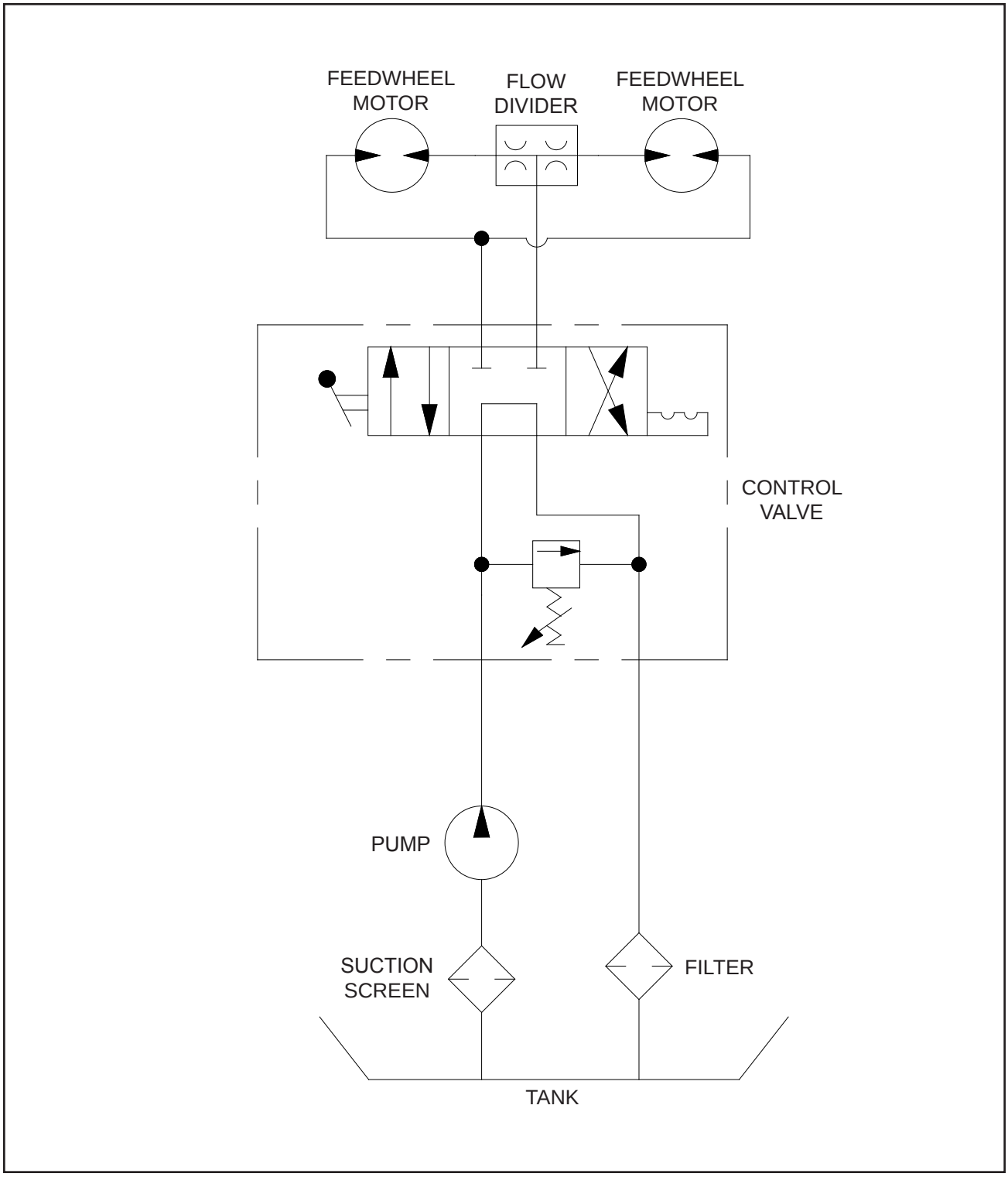

SPECIFIC SCHEMATIC FUNCTION MAY VARY DEPENDING
ON OPTIONS OR COMPONENT MANUFACTURE.

WITH AUTOFEED PLUS, YOKE LIFT CYLINDER, WINCH

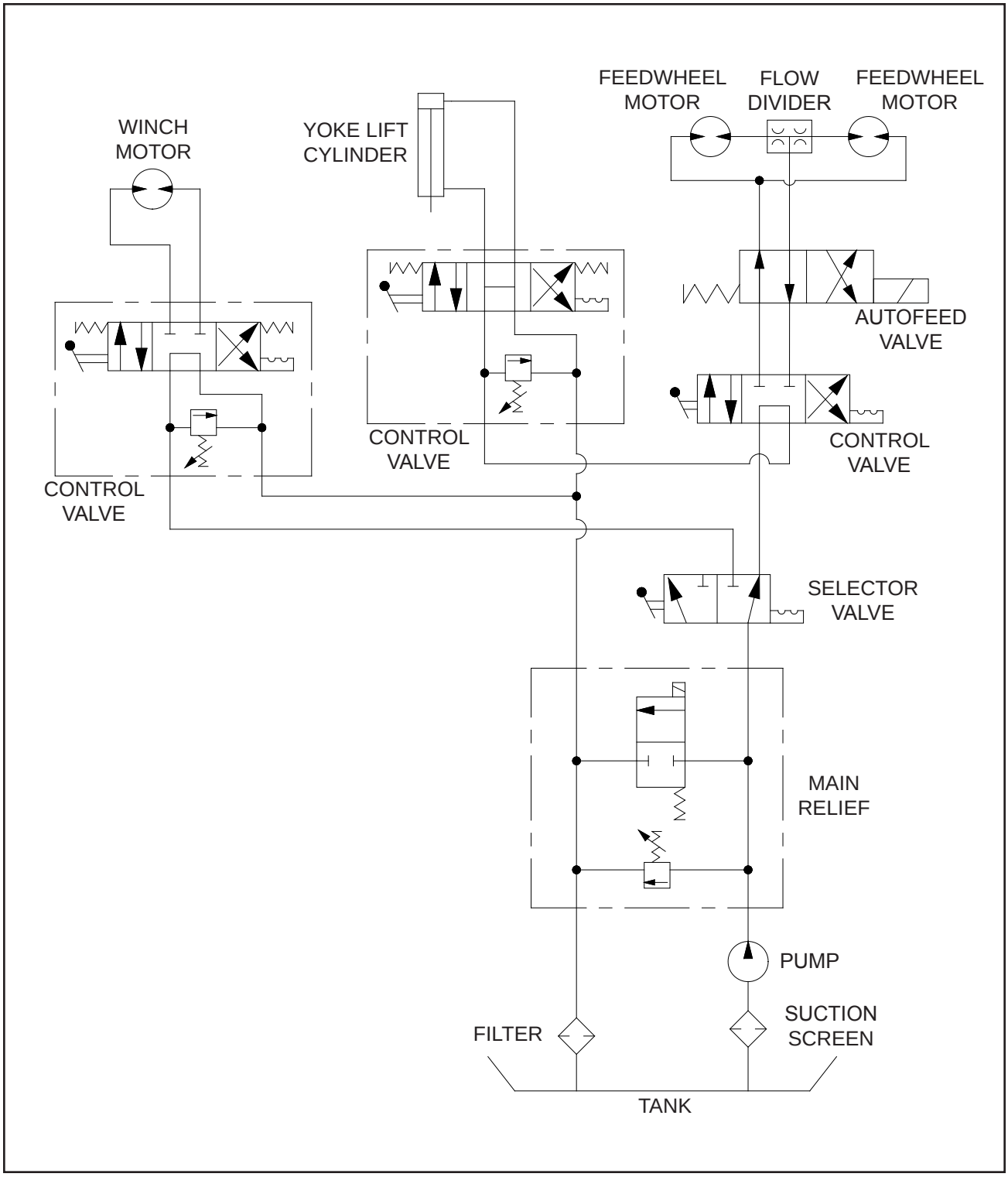

CHIPPER SECTION

UNDER **NO** SITUATION IS HEAL OF KNIFE TO BE **INSIDE** EDGE OF MILLED POCKET!

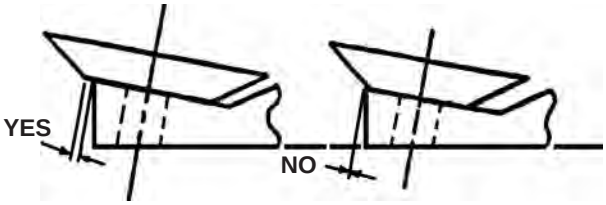

Knives should be replaced in sets. These sets are determined by the amount of resharpening done to the knives. It should be reinstalled with another knife of comparable usage. It helps to keep the disc/drum balanced, and it helps maintain chip quality.

NEVER allow these knives to wear beyond absolute specified minimum distance from the center line of bolt (see below).

TROUBLE SHOOTING CHIPPER PROBLEMS

1) Chipper Makes Poor Quality Chips or Does Not Feed Properly.

A. Knives have lost their edge. File, grind or replace knives. **DO NOT** operate the Bandit with dull knives.
B. Knife anvil worn or needs adjustment. Rotate, repair or replace (see Figure 1).
C. Feedwheel(s) are not operating correctly. (SEE HYDRAULIC TROUBLE SHOOTING).
D. The throat/base opening is a high-wear area. The feed plate anvil takes much of this wear but other areas wear as well. Attention must be paid to any areas where outer, noncutting edges of chipper knife are exposed. These areas must be built up with weld to maintain the original integrity.
E. Knives are at the wrong angle. Knives must be ground at a 30° to 31° angle.
F. Feedwheel teeth worn (REPLACE).
G. Material being chipped is very small, dry or rotting. This type of material does not produce good chip quality.

2) Chipper Knife Hits Anvil.

A. Check the anvil clearance at both sides of the knife by using a feeler gauge, the clearance should be the specified distance from the highest knife.
B. Check the chipper front bearing retainer cap for tightness (SEE TORQUE CHART).

3) Discharge Plugs or Does Not Throw Chips Properly.

A. Lugging engine on large material - keep engine RPM up.
B. Knives are dull or worn to minimum size.
C. Obstruction in discharge chute. Patches welded into the chute can cause obstruction of chip flow. Anything causing an obstruction will cause the chute to plug.
D. Chipping rotting material that has little substance can also plug the discharge chute.
E. Worn fan blades.

4) Chipper Bearings Running Too Hot.

A. Improper lubrication - purge bearings once a day with EP-2 Lithium type grease.
B. Chipper disc operating at too high RPM's. DO NOT exceed recommended RPM's.
C. Front bearing retainer cap loose (SEE TORQUE CHART).
D. Bearings worn out (REPLACE).
E. Set screws on sheave side bearing not tight.

FIGURE 1

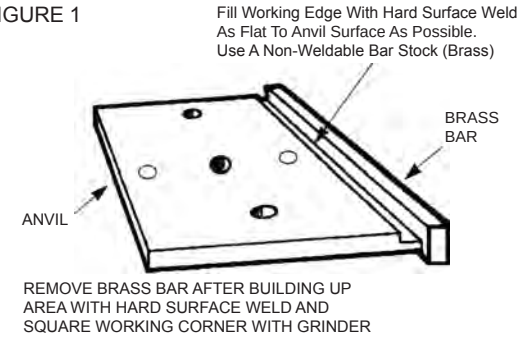

1/2" x 4 1/2" x 7 1/4" (12.7 mm x 114.3 mm x 184.2 mm)
Chipper Knives (New Style)

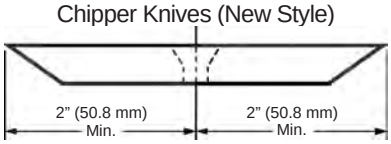

1/2" x 4" x 7 1/4" (12.7 mm x 101.6 mm x 184.2 mm)
Chipper Knives (Old Style)

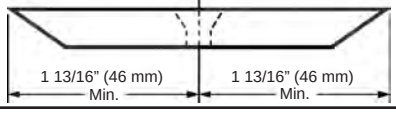

KNIFE GRINDING AND FILING

Only Bandit knives and hardware are recommended for use in your Bandit chippers. Only then can you be assured of a quality product that fits and performs the best to the standards of excellence that is expected from the Bandit chipper.

Chipper knives MUST be kept sharp at all times for the ultimate chipper and knife performance. The main cause of poor cutting performance is dull knives.

Dull Knives Cause:

- Excessive waste of engine horsepower
- Bad quality chips; chunks, slivers, etc.
- Excessive strain on knives and mounting hardware
- Excessive strain on chipper disc/drum bearings and total machine
- Excessive chipping vibration damaging the machine
- Excessive strain on drives, PTO's, engines, etc.
- Increase the probability of the discharge plugging and decreases the throwing distance
- Loss of time and money

The Dulling Of Chipper Knives Is Caused By:

- Poor quality knives
- Improper anvil to knife clearance
- Force feeding wood faster than chipper will accept
- Dirt, grit, or foreign material on the wood
- Chipper knives ground at wrong angle
- Improper care of knives and knife hardware

These are just a few factors, there are other situations that can lead to the dulling of chipper knives.

NOTICE

Many times a chipper knives cutting edge/point can be brought back to a good edge with a #10 Flat Bastard Mill File. This can reduce the amount of regrinding.

Typical Knife Grinding Angles:
"Bolt-In" Knives = 30° to 31° Angle

Knives should be replaced in sets. These sets are determined by the amount of resharpening done to the knives (knife width). Regrinding knives reduces the width of the knife. Knife replacement should be done in sets of the same width knives. That will reduce chipping vibration and increase chipping performance.

NOTICE

- Keep knives sharp.
- Keep knife angle correct when grinding.
- Do not over grind so knife is narrower than allowed width, or you will pack wood and break knives.
- Use correct knife size, knife quality, knife mounting hardware, and torque knife mounting hardware to the specified torque.
- Replace knife mounting hardware after (5) times of tightening.

⚠ CAUTION

Do not grind the knives in a direction which produces a radius, or hollow grind, on the surface of the knife. Strength and life of the cutting edge is reduced.

- For maximum chipper efficiency, the original cutting angle must be maintained when the knives are sharpened. The knives should be machine ground to produce a flat, straight edge.
- Knives may be sharpened repeatedly as long as their original width is not reduced to less than the specified minimum width. If a knife measures less than the specified minimum width after sharpening, it must be discarded.
- Sharpening techniques should be the same as those employed for any high carbon steel cutting edge. Use a coolant and exercise care not to draw temper or crack the cutting edges by excessive heating.
- Inspect the knives after grinding to ensure the knives are free of cracks.
- Maintain spare sharpened knives to avoid downtime for knife sharpening.

NOTICE

USE CORRECT KNIFE HARDWARE

DO NOT use a size or style chipper knife, bolt or nut other than factory approved for this chipper - see manual.

DO NOT over torque or under torque knife bolts and nuts - see manual.

DO NOT resharpen knife more than minimum width - see manual.

DO NOT use a knife bolt or nut which has been tightened over (5) times - replace.

DO NOT improperly install the knife nuts. Flat surface of nut goes toward the chipper disc.

KNIFE CHANGING PROCEDURE

Only Bandit knives and hardware are recommended for use in your Bandit chippers. Only then can you be assured of a quality product that fits and performs the best to the standards of excellence that is expected from the Bandit chipper.

⚠ DANGER

Chipper knives are sharp and can be dangerous. It is always necessary for your protection to be extra careful and wear leather gloves when handling knives. Before changing knives make sure all shut down procedures are followed.

1. Before attempting any type of maintenance disengage clutch, install clutch lock if equipped, turn off engine, wait for the disc/drum to come to a complete stop, install the disc/drum lock pin, disconnect battery, and make sure the ignition key is in your possession.
2. Disconnect the chipper hood engine disable plug.
3. Remove the padlock from the hood pin.
4. On disc chippers, recess the spring lock for the hood pin and retract the hood pin. On drum chippers, retract the hood pin.
5. Carefully open the hinged part of the chipper hood. Do not slam the chipper hood to the open position. This will cause damage to the hinge. If the hinge becomes damaged by slamming the hood open, replace the hinge immediately! If the hinge has become damaged, it will cause misalignment of the hood, the chipper disc/drum may hit the hood and cause a serious accident!
6. Changing the chipper knives is a two person job. One person, using a wooden block, holds the chipper knife in place while the other person removes the chipper knife hardware. Remove all of the knives in each pocket. If the machine is a disc chipper with 5/8” knife bolts, typically a 3/8” allen key and a 1 1/16” socket is required to change or torque the knife hardware. If the machine is a disc chipper with 1/2” knife bolts, typically a 5/16” allen key and a 7/8” socket is required to change or torque the knife hardware. If the machine is a drum chipper, typically a 15/16” socket is required to change or torque the knife hardware.
7. Once the knives have been removed, inspect the knife pocket. Check for secure welds, excessive wear, impact cracks, and elongated bolt holes on disc chippers or the condition of the knife bolt threads on drum chippers. If a problem is found, contact your local dealer or Bandit Industries.
8. Clean out the knife pocket at this time. Remove all debris from the pocket and knife bolt holes.
9. Sharpen, rotate, or replace the chipper knife. Knives should be professionally ground, maintaining angle and dimensional specifications. Knives should be replaced in sets. These sets are determined by the amount of resharpening done to the knives. It should be reinstalled with another knife of comparable usage. It helps to keep the disc/drum balanced, and it helps maintain chip quality. <u>Do not allow the knives to wear beyond the absolute minimum specified distance from the center line of the bolt hole.</u> Reinstall the chipper knives. Make sure to properly torque the knife hardware, see Bolt Torque Chart. Knife mounting hardware must be replaced after maximum of 4 - 5 knife rotations/changes to in sure safe clamping ability. All knives and knife mounting hardware must be factory approved.
10. Remove the disc/drum lock pin. Very carefully, manually with a bar, turn the chipper disc/drum to the next knife pocket. Reinstall the disc/drum lock pin.
11. Repeat steps 6 though 10, for each knife pocket.
12. Once the knives have been changed or rotated, check the anvil clearance. Make sure the clearance is maintained to the specified distance from the highest knife. Do Not under any circumstance attempt to rotate the chipper disc/drum while someone is inside the infeed hopper. They may become seriously injured, Do Not Do This!
13. Close the hinged part of the chipper hood and reinstall the hood pin, hood pin padlock, chipper hood disable plug, and on disc chippers make sure the spring lock for the hood pin springs back into position.

LUBRICATION & COOLANT

1) Engine:
Follow original equipment manufacturer's requirements for both changing oils and filters, refer to engine manual specifications.

2) Engine Coolant:
Refer to engine manufacturer's manual specifications.

3) Clutch:
Follow original equipment manufacturer's requirements for both greasing and adjusting. Frequently, adjust and lubricate per PTO manufacturer's manual.

4) Wheel Bearings:
Follow axle manufacturer's instructions for greasing or oiling wheel bearings.

5) Hydraulic Reservoir Tank:
Completely change hydraulic oil, suction screen(s), and flush the tank annually. Change hydraulic oil filter(s) AFTER FIRST 10 HOURS OF OPERATION. Then change hydraulic oil filter(s) every 3 months or 400 hours thereafter. Maintain hydraulic oil level 7/8 full. See hydraulic oil requirements below. Check hydraulic oil level in tank daily.

6) High Pressure Filter(s) (if equipped):
If machine is equipped, change high pressure oil filter(s) AFTER FIRST 10 HOURS OF OPERATION. Then change high pressure oil filter(s) every 3 months or 400 hours thereafter.

7) Hydraulic Fluid Requirements:
See pages 52 - 53 for hydraulic fluid requirements.

8) Discharge Swivel:
Grease swivel plates for discharge as needed.

9) Hood Hinge:
Make sure the hood hinge operates correctly, and is lubricated. Must replace hinge if damaged.

10) Pivoting And Hinged Areas:
Lubricate all pivoting and hinged areas weekly. (i.e. control handle, discharge flipper, etc.)

11) Pintle Eye Ring:
Keep greased to reduce wear and extend the normal life of your pintle eye ring.

12) Chain Operated Components:
Use a dry lubricant on any chain driven components weekly. (i.e. hydraulic swivel discharge, or chain driven feedwheels)

13) Chipper & Feedwheel Bearings:
Use an EP-2 Lithium type grease only for all bearings. Purge chipper bearings with grease you can not over grease these bearings. Grease feedwheel bearings with one shot of grease. Both types of bearings are designed with a relief system that will not allow over greasing. In other words, you can not hurt the bearing seals by pumping in to much grease. Wipe off excess grease. **Excessive grease will attract dirt.**

Most of the failures related to bearings are diagnosed as "Contamination". Contamination is caused by improper lubrication.

Especially important is proper lubrication when the chipper is setting idle. The bearings must be fully purged when shut down. Then the bearings must be again fully purged each thirty (30) days and the machine allowed to run for approximately 10 minutes. Then fully purged again before the machine is put back into operation. Failure to do this will ruin the bearings. Bearings corrode when the machine is setting idle.

The second largest cause of bearing failure is operating them at high speeds when the grease is cold. This causes the bearing race to turn on the shaft. Naturally this ruins the bearing as well as the shaft. Allow the bearings to turn at slower speeds for at least five minutes. Also check the bearing lock collar set screws or bearing locknut for tightness each 30 days. Loose set screws or locknut allows the race to turn on the shaft. Failed bearings diagnosed as contamination or cold starts at high speed are not covered by warranty of the bearing manufacturer.

14) Feedwheel Slide Box:
Check that feedwheel slide box is working smoothly, oil with 10W/30 type motor oil weekly. Especially new machines need oiling to ensure correct operation during break-in.

15) "Bandit Lever Throttle Cable (if equipped):
If the machine is equipped with a "Bandit" lever throttle system, lubricate inner throttle cable and cable ends with a cable lube or SAE 10W/30 oil every month. Replace throttle cable if it doesn't operate smoothly.

TYPICAL ELECTRICAL WIRING DIAGRAMS

WIRING FOR STANDARD 6 PRONG PLUG AND 6 WIRE MAIN CABLE EFFECTIVE ON MACHINES BUILT AFTER 11/01/04

6 Wire Main Cable Color Code
Red R (Brakes & Breakaway Switch)
White W (Ground)
Green G (Right Turn)
Yellow Y (Left Turn)
Brown BR (Running Lights)
Black BL (Power to Breakaway Switch)

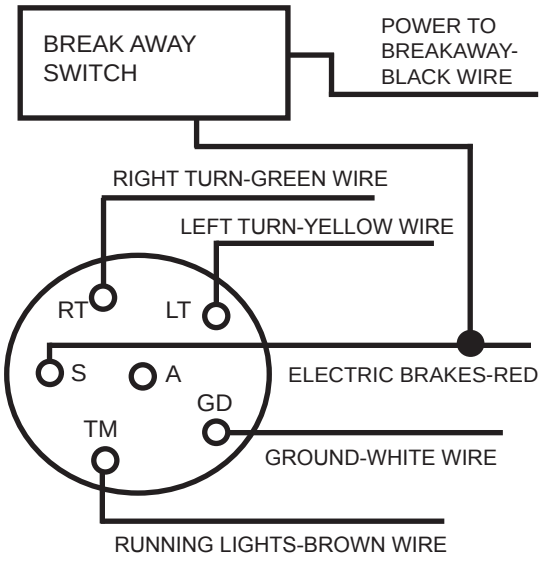

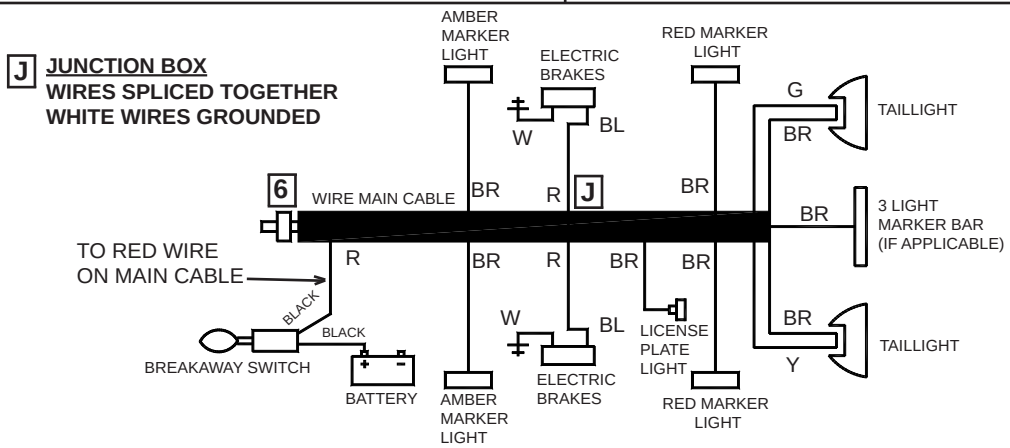

6 WIRE MAIN CABLE COLOR CODE (OLD STYLE)

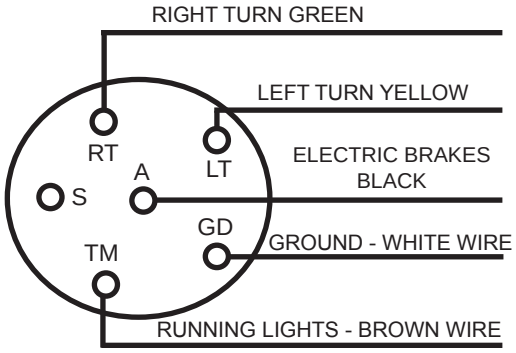

OLD STYLE

6 Wire Main Cable Color Code
Black BL (Brakes)
White W (Ground)
Green G (Right Turn)
Yellow Y (Left Turn)
Brown BR (Running Lights)
Red R (Breakaway Switch)

REPLACEMENT PARTS SECTION

Depending on what replacement parts you are ordering
the following information will be needed:

CHIPPER COMPONENTS	ENGINE COMPONENTS	CLUTCH COMPONENTS
Serial Number	Brand	Brand
Model Number of Chipper	Engine Serial Number	Serial Number
	Engine Spec. Number	Assembly Number of Clutch

NOTE

When ordering any replacement parts you should have the serial number (S/N) and model of the machine to ensure that you receive the correct replacement part. See page 6 for typical serial number & work order number locations.

NOTE

All nuts, bolts, washers, and many other components can be ordered by physical description.

NOTE

Some of the components shown in this section are for optional equipment and may not apply to every machine.

Bandit Industries Inc. reserves the right to make changes in models, size, design, installations and applications on any part without notification.

MODEL 250

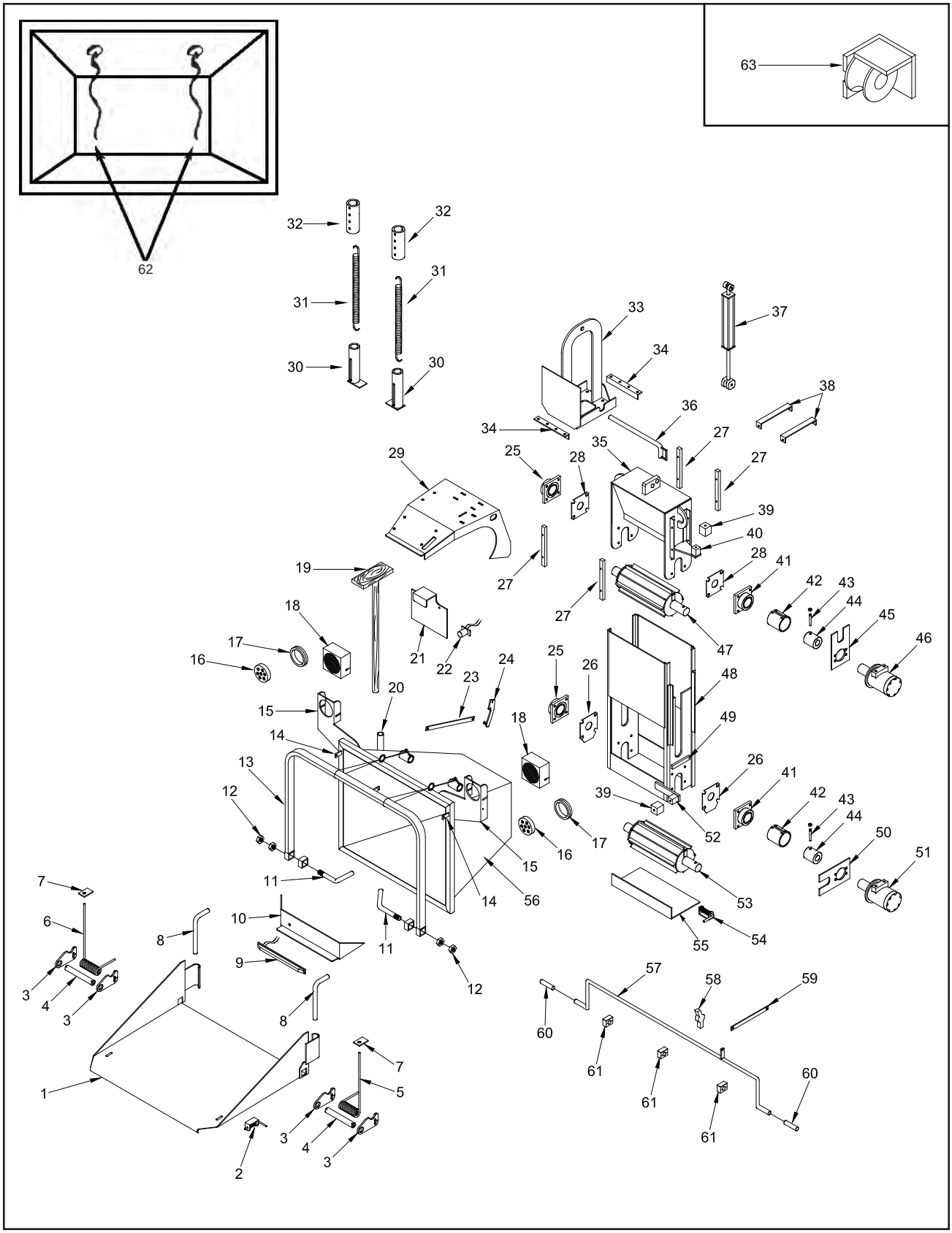

NOTE: Parts may not be exactly as shown.

Bandit

MODEL 250

LOCATION	STANDARD PART NUMBER	SUPER SIZED PART NUMBER	DESCRIPTION
1.	980-200055	980-200055	30” Folding Pan For Infeed Hopper
2 a.	900-4901-83	900-4901-83	Folding Pan Spring Lock - 1/2” Diameter Pin
b.	900-7900-93	900-7900-93	Rubber Cap For Spring Lock - 1/2” Diameter
3 a.	981-300320	981-300320	Spring Mount For Spring Assist - 2” x 3” Rim
b.	980-0129-66	980-0129-66	Spring Mount For Spring Assist - 2” Dia. Rim
4 a.	980-0129-86	980-0129-86	Spring Tube For Spring Assist
b.	900-4905-45	900-4905-45	Cotter Pin For Spring Tube (Not Shown)
5 a.	900-4905-40	900-4905-40	Right Spring For Spring Assist
b.	980-0509-56	980-0509-56	Spring Assist Kit (Includes 3 Through 7)
6 a.	900-4905-39	900-4905-39	Left Spring For Spring Assist
b.	980-0509-56	980-0509-56	Spring Assist Kit (Includes 3 Through 7)
7.	980-0133-34	980-0133-34	Top Spring Block (Specify Length 1 1/2” or 2 1/2”)
8 a.	955-300086	955-300086	Folding Pan Lock Pin
b.	900-7900-96	900-7900-96	Rubber Cap For Lock Pin
9.	900-2909-93	900-2909-93	LED 3 Light Bar
10.	980-300118	980-300118	Mount For LED 3 Light Bar
11 a.	981-300151	981-300151	Right Pivot Pin
b.	981-300152	981-300152	Left Pivot Pin
12.	900-4900-44	900-4900-44	Pivot Pin Jam Nut
13.	980-300002	980-300002	Control Handle
14.	980-0131-65	980-0131-65	Folding Pan Lock Tab For 1/2” Diameter Pin
15 a.	980-200176	980-200176	Tail Light Mount - Road Side
b.	980-200177	980-200177	Tail Light Mount - Curb Side
16 a.	900-2908-76	900-2908-76	LED Tail Light
b.	900-2908-74	900-2908-74	Adapter Wire for LED Tail Light (Not Shown)
17.	900-2908-75	900-2908-75	Rubber Grommet for LED Tail Light
18.	980-0508-72	980-0508-72	Heavy Duty Tail Light Cover
19.	981-1005-30	980-200147	Wooden Push Paddle
20.	980-0122-55	980-0122-55	Wooden Push Paddle Mount
21.	980-300181	980-300181	License Plate and Light Mount
22.	900-2900-07	900-2900-07	License Plate Light
23 a.	980-100139	980-100139	Hydraulic Control Arm - 20 1/2” (Start 8/04)
b.	980-0123-94	980-0123-94	Hydraulic Control Arm - 17” (Pre 8/04)
24.	980-100141	980-100141	Feedwheel Control Valve Linkage
25 a.	900-1909-79	900-1909-79	Feedwheel Bearing (Set Screw Style)(Start 8/04)
b.	900-1909-81	900-1909-81	Feedwheel Bearing - Debris (Set Screw Style)(Start 8/04)
c.	900-4912-37	900-4912-37	Feedwheel Bearing Bolt
d.	900-1900-66	900-1900-66	Feedwheel Bearing (Pre 8/04)
e.	900-4900-15	900-4900-15	Top Feedwheel Bearing Bolt (Pre 8/04)
f.	900-4900-16	900-4900-16	Bottom Feedwheel Bearing Bolt (Pre 8/04)
26 a.	981-300066	981-300066	Bottom Feedwheel Bearing Backer Plate (Start 8/04)
b.	955-1001-22	955-1001-22	Bottom Feedwheel Bearing Backer Plate (Pre 8/04)

Copyright 8/07

MODEL 250

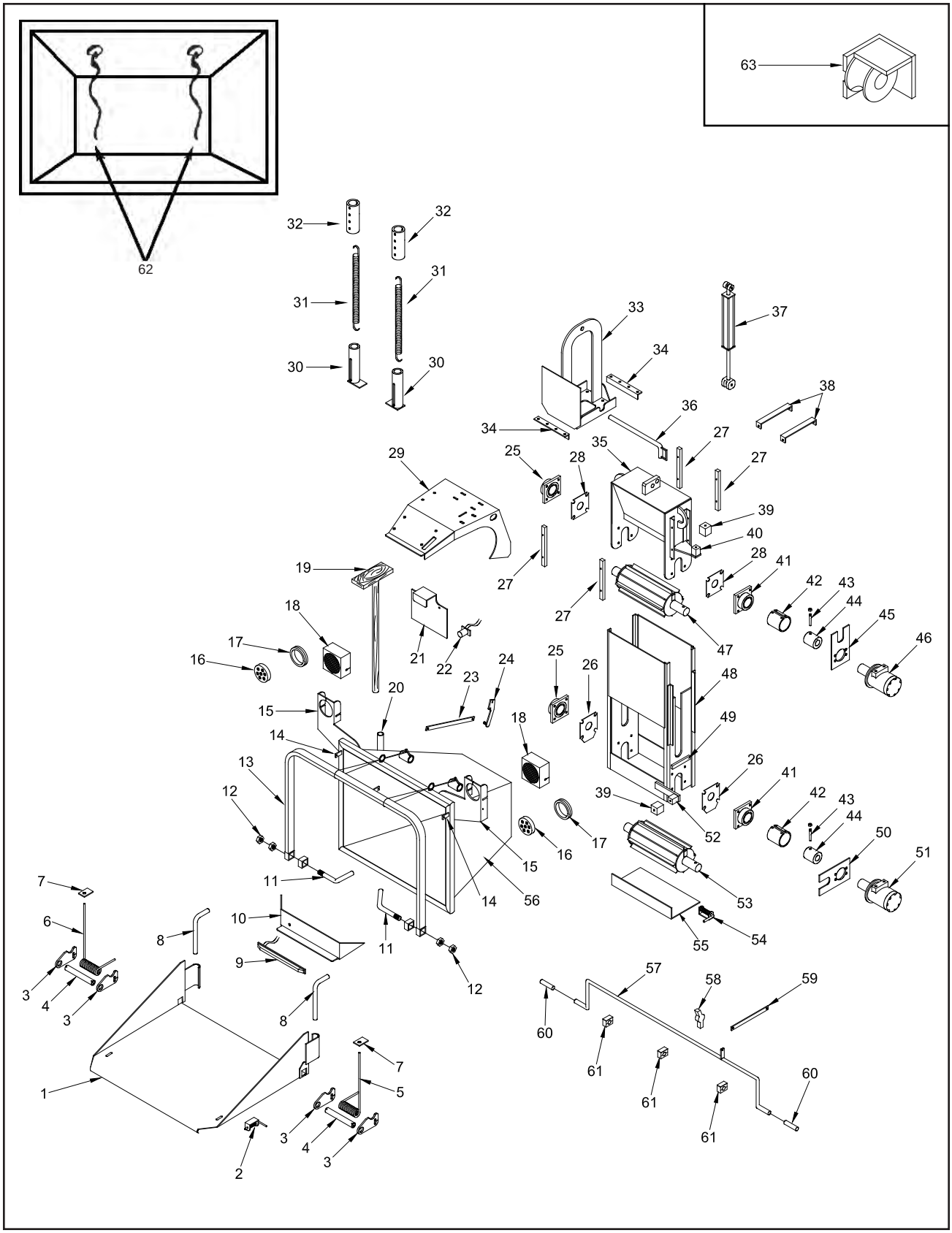

NOTE: Parts may not be exactly as shown.

Bandit

MODEL 250

LOCATION	STANDARD PART NUMBER	SUPER SIZED PART NUMBER	DESCRIPTION
27 a.	980-0138-10	980-0138-10	Yoke Slide - 1” x 1” x 11 1/2” (Start 4/04)
b.	980-0111-08	980-0111-08	Yoke Slide - 3/4” x 1” x 11 1/2” (Pre 4/04)
28 a.	980-300083	980-300083	Top Feedwheel Bearing Backer Plate (Start 8/04)
b.	980-0114-97	980-0114-97	Top Feedwheel Bearing Backer Plate (Pre 8/04)
29.	981-200048	981-200048	Winch and Valve Mount
30 a.	981-300031	981-300031	Bottom Mount for Easy Climb System
b.	900-4905-79	900-4905-79	Clevis Pin (Not Shown)
c.	900-4905-80	900-4905-80	Cotter Pin for Clevis Pin (Not Shown)
d.	900-4900-36	900-4900-36	Flat Washer (Not Shown)
31 a.	900-4900-04	900-4900-04	Yoke Spring
b.	900-4902-02	900-4902-02	Spring Adjuster (Pre 9/99) (Not Shown)
32 a.	981-300030	981-300030	Top Mount for Easy Climb System
b.	900-4905-14	900-4905-14	Clevis Pin (Not Shown)
c.	900-4905-19	900-4905-19	Hair Pin for Clevis Pin (Not Shown)
33 a.	981-100008	981-100008	Yoke Lift Assembly (Start 6/05)
b.	981-0501-48	981-0501-48	Yoke Lift Assembly (Pre 6/05)
c.	981-300155	981-300155	Top Yoke Plate Without Yoke Lift (Not Shown)
34.	955-1005-76	955-1005-76	Yoke Lift / Top Plate Angle Mount
35 a.	981-200066	981-200067	Top Yoke Assembly (Start 8/04)
b.	981-0501-53	981-0502-13	Top Yoke Assembly (Pre 8/04)
36 a.	981-300148	981-300148	Yoke Lock Pin (Start 6/05)
b.	955-1005-80	955-1005-80	Yoke Lock Pin (Pre 6/05)
37 a.	900-3925-04	900-3925-04	Yoke Lift Cylinder-Welded
b.	900-3903-49	900-3903-49	Yoke Lift Cylinder-Tie Rod
c.	904-0007-14	904-0007-14	Pin For Welded Cylinder (Not Shown)
d.	900-4913-23	900-4913-23	Rubber Washer - Top Of Cylinder (Not Shown)
38.	955-1005-81	955-1005-81	Top Yoke Strap (Pre 6/05)
39.	937-900009	937-900009	Torque Arm Cushion (Start 4/06)
40 a.	981-300199	981-300199	Top Torque Arm Stop (Start 4/06)
b.	937-300316	937-300316	Torque Arm Cushion Mount (Start 4/06)
c.	981-1006-71	981-1006-71	Top Torque Arm Stop (Pre 4/06)
d.	955-1014-01	955-1014-01	Torque Arm Stop Block (Pre 4/06)
41 a.	900-1909-80	900-1909-80	Feedwheel Bearing (Grip-Tight Style) (Start 8/04)
b.	900-4912-37	900-4912-37	Top Feedwheel Bearing Bolt (Start 8/04)
c.	900-4909-23	900-4909-23	Bottom Feedwheel Bearing Bolt (Start 8/04)
d.	900-1900-66	900-1900-66	Feedwheel Bearing (Pre 8/04)
e.	900-4900-15	900-4900-15	Top Feedwheel Bearing Bolt (Pre 8/04)
f.	900-4900-16	900-4900-16	Bottom Feedwheel Bearing Bolt (Pre 8/04)
42 a.	900-7901-23	900-7901-23	Rubber Coupler Guard - 17 3/4” (Start 6/05)
b.	900-7900-38	900-7900-38	Rubber Coupler Guard - 15 3/4” (Pre 6/05)
c.	980-0508-57	980-0508-57	Coupler Guard Mount (Not Shown)
43 a.	900-4909-54	900-4909-54	Taper Pin With Nut (Start 6/05)
b.	900-4905-55	900-4905-55	Taper Pin Only (Pre 6/05)
44 a.	981-300140	981-300140	Coupler With Motor Nut and Taper Pin With Nut (Start 6/05)
b.	981-1006-45	981-1006-45	Coupler With Motor Nut and Taper Pin (Pre 6/05)

Copyright 8/07

MODEL 250

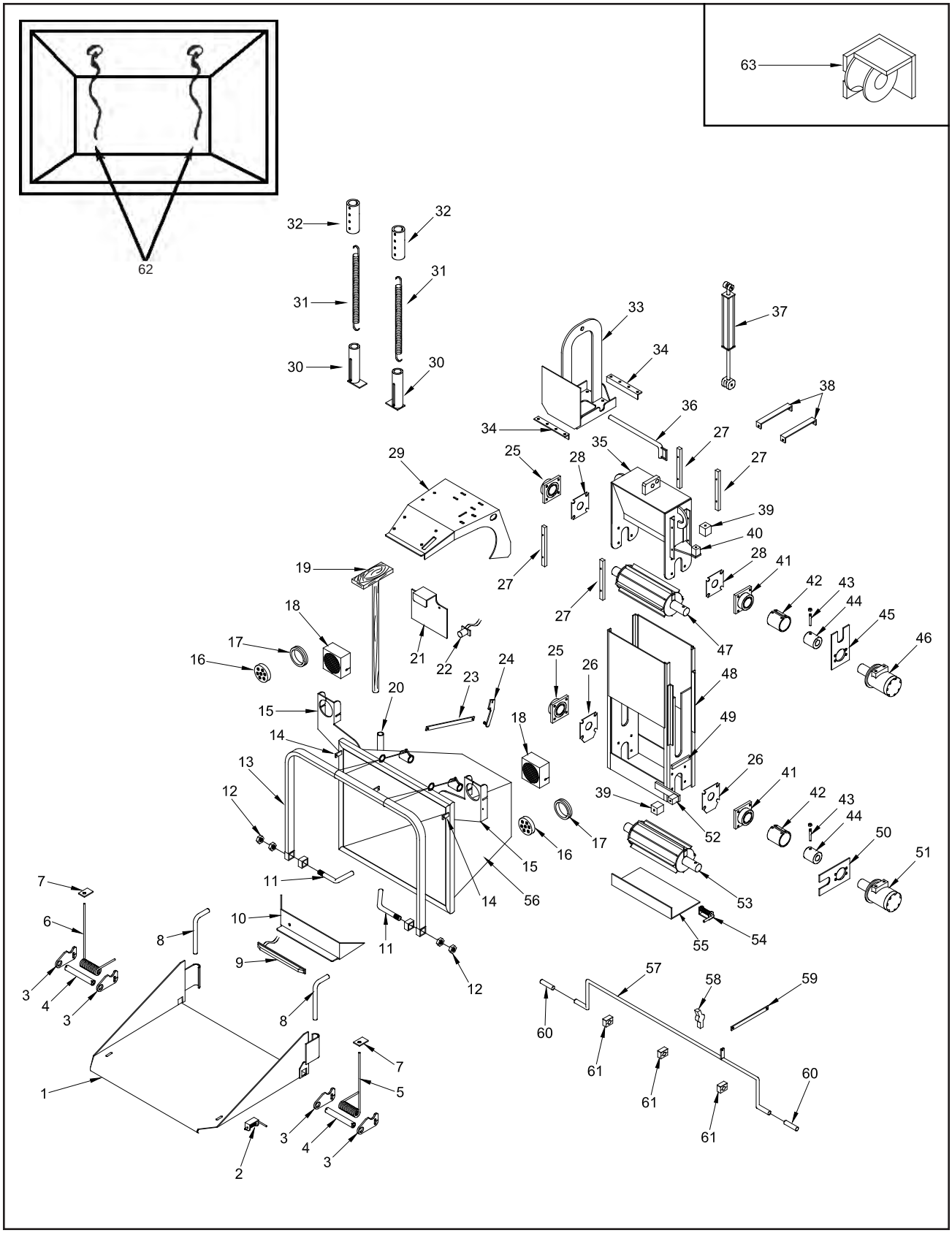

NOTE: Parts may not be exactly as shown.

Bandit

MODEL 250

LOCATION	STANDARD PART NUMBER	SUPER SIZED PART NUMBER	DESCRIPTION
45 a.	981-300197	981-300197	Top Torque Arm (Start 4/06)
b.	981-1006-44	981-1006-44	Top Torque Arm (Pre 4/06)
46.	900-3908-68	900-3908-68	Top Feedwheel Hydraulic Motor
47 a.	981-0501-32	981-0501-95	Top Feedwheel Assembly
b.	981-300191	981-300088	Top Feedwheel Tooth
c.	981-0501-31	981-0501-94	Top Feedwheel Shaft & Coupler Assembly
48 a.	981-200052	981-200052	Feedwheel Slide Box Assembly (Start 8/04)
b.	981-200051	981-200051	Feedwheel Slide Box Assembly (Pre 8/04)
49.	955-1002-45	955-1002-45	Yoke Stop Block
50 a.	981-300196	981-300196	Bottom Torque Arm (Start 4/06)
b.	981-1006-43	981-1006-43	Bottom Torque Arm (Pre 4/06)
51.	900-3908-67	900-3908-67	Bottom Feedwheel Hydraulic Motor
52 a.	981-300198	981-300198	Bottom Torque Arm Stop (Start 4/06)
b.	937-300316	937-300316	Torque Arm Cushion Mount (Start 4/06)
c.	981-1006-71	981-1006-71	Bottom Torque Arm Stop (Pre 4/06)
d.	955-1014-01	955-1014-01	Torque Arm Stop Block (Pre 4/06)
53 a.	981-0501-28	981-0501-96	Bottom Feedwheel Assembly
b.	981-300191	981-300088	Bottom Feedwheel Tooth
c.	981-0501-31	981-0501-94	Bottom Feedwheel Shaft & Coupler Assembly
54.	900-4901-83	900-4901-83	Trap Door Spring Lock
55 a.	981-1006-59	981-200004	Trap Door Assembly
b.	981-1000-60	981-1000-60	Hinge For Trap Door (Not Shown)
56 a.	981-200021	981-200022	Infeed Hopper Assembly (Start 9/04)
b.	981-0500-69	981-0502-18	Infeed Hopper Assembly (Pre 9/04)
57.	980-300065	980-300065	Dual Yoke Lift Control Bar
58.	900-3930-96	900-3930-96	Short Valve Handle - Lift Cylinder Control Linkage
59.	980-300157	980-300157	Control Arm - Dual Yoke Lift - 12 1/2”
60.	900-7900-96	900-7900-96	Rubber Cap - Dual Yoke Lift Control Bar
61.	900-3914-02	900-3914-02	Clamp - Lift Control Bar
62.	980-0508-64	980-0508-64	Last Chance Cable Assembly
63.	980-0510-10	980-0510-10	Yoke Roller Assembly - Specify Right Or Left Hand (Pre 2/03)
64.	981-1002-45	981-1008-47	Bottom Feedwheel Scrapper Bar (Not Shown)

Copyright 8/07

MODEL 254

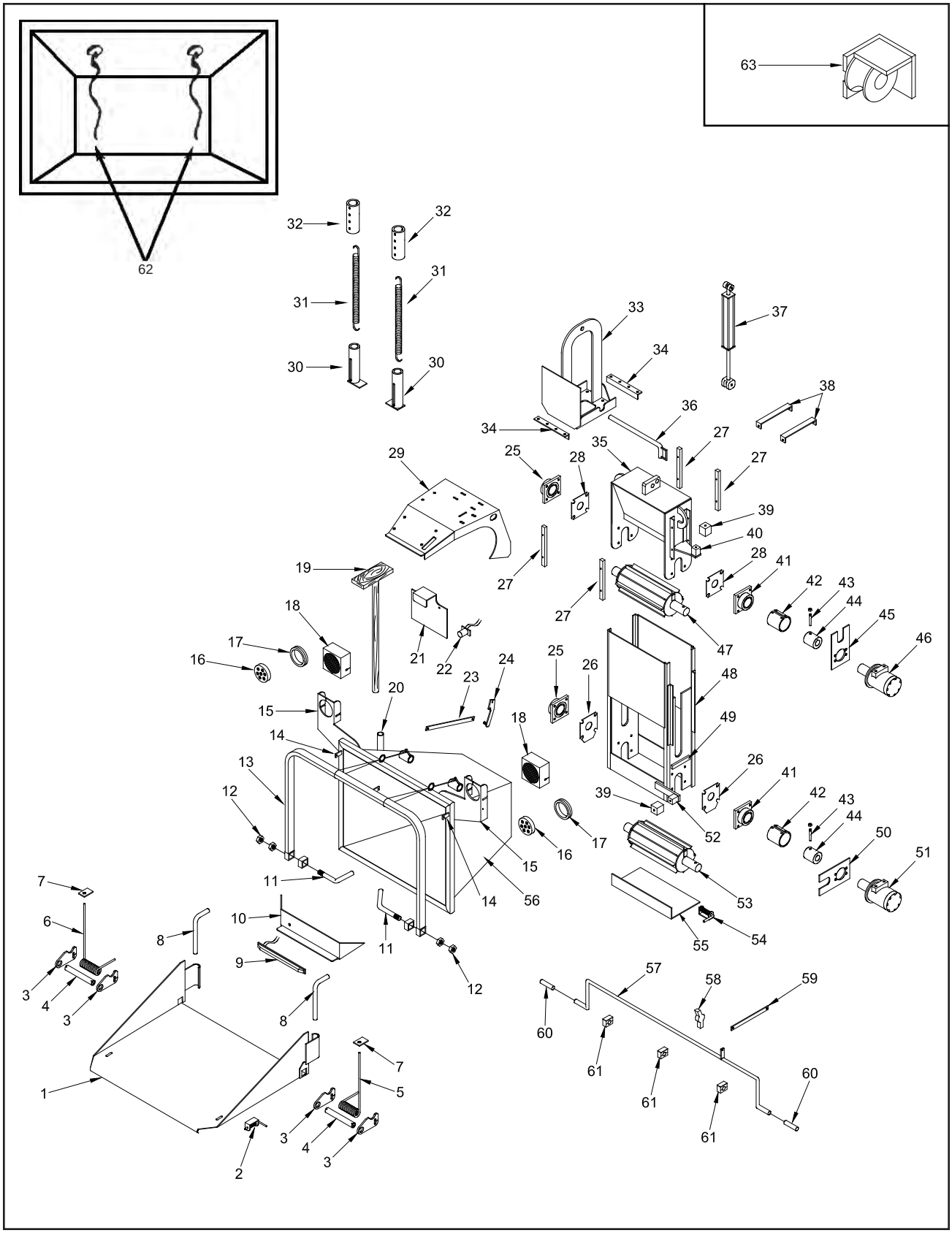

NOTE: Parts may not be exactly as shown.

Bandit

MODEL 254

LOCATION	STANDARD PART NUMBER	SUPER SIZED PART NUMBER	DESCRIPTION
1.	955-200022	955-200022	30” Folding Pan For Infeed Hopper
2 a.	900-4904-90	900-4904-90	Folding Pan Spring Lock - 3/4” Diameter Pin
b.	900-4901-83	900-4901-83	Folding Pan Spring Lock - 1/2” Diameter Pin
c.	900-7900-96	900-7900-96	Rubber Cap For Spring Lock - 3/4” Diameter
d.	900-7900-93	900-7900-93	Rubber Cap For Spring Lock - 1/2” Diameter
3 a.	981-300320	981-300320	Spring Mount For Spring Assist - 2” x 3” Rim
b.	980-0129-66	980-0129-66	Spring Mount For Spring Assist - 2” Dia. Rim
4 a.	980-0129-86	980-0129-86	Spring Tube For Spring Assist
b.	900-4905-45	900-4905-45	Cotter Pin For Spring Tube (Not Shown)
5 a.	900-4905-40	900-4905-40	Right Spring For Spring Assist
b.	980-0509-56	980-0509-56	Spring Assist Kit (Includes 3 Through 7)
6 a.	900-4905-39	900-4905-39	Left Spring For Spring Assist
b.	980-0509-56	980-0509-56	Spring Assist Kit (Includes 3 Through 7)
7.	980-0133-34	980-0133-34	Top Spring Block (Specify Length 1 1/2” or 2 1/2”)
8 a.	955-300086	955-300086	Folding Pan Lock Pin
b.	900-7900-96	900-7900-96	Rubber Cap For Lock Pin
9.	900-2909-93	900-2909-93	LED 3 Light Bar
10.	980-300118	980-300118	Mount For LED 3 Light Bar
11 a.	955-1007-66	955-1007-66	Right Pivot Pin
b.	955-1007-66	955-1007-66	Left Pivot Pin
12.	900-4900-44	900-4900-44	Pivot Pin Jam Nut
13.	980-300002	980-300002	Control Handle
14 a.	980-300302	980-300302	Folding Pan Lock Tab For 3/4” Diameter Pin
b.	980-0131-65	980-0131-65	Folding Pan Lock Tab For 1/2” Diameter Pin
15 a.	980-200176	980-200176	Tail Light Mount - Road Side
b.	980-200177	980-200177	Tail Light Mount - Curb Side
16 a.	900-2908-76	900-2908-76	LED Tail Light
b.	900-2908-74	900-2908-74	Adapter Wire for LED Tail Light (Not Shown)
17.	900-2908-75	900-2908-75	Rubber Grommet for LED Tail Light
18.	980-0508-72	980-0508-72	Heavy Duty Tail Light Cover
19.	981-1005-30	980-200147	Wooden Push Paddle
20.	980-0122-55	980-0122-55	Wooden Push Paddle Mount
21.	980-300181	980-300181	License Plate and Light Mount
22.	900-2900-07	900-2900-07	License Plate Light
23 a.	911-300076	911-300076	Hydraulic Control Arm - 19 1/4” (Start 8/04)
b.	980-0123-94	980-0123-94	Hydraulic Control Arm - 17” (Pre 8/04)
c.	626-0001-80	626-0001-80	Hydraulic Control Arm - 11 1/2” (Pre 8/04)
24.	980-100141	980-100141	Feedwheel Control Valve Linkage
25 a.	900-1909-79	900-1909-79	Feedwheel Bearing (Set Screw Style)(Start 8/04)
b.	900-1909-81	900-1909-81	Feedwheel Bearing - Debris (Set Screw Style)(Start 8/04)
c.	900-4912-37	900-4912-37	Feedwheel Bearing Bolt
d.	900-1900-66	900-1900-66	Feedwheel Bearing (Pre 8/04)
e.	900-4900-15	900-4900-15	Top Feedwheel Bearing Bolt (Pre 8/04)
f.	900-4900-16	900-4900-16	Bottom Feedwheel Bearing Bolt (Pre 8/04)
26 a.	981-300066	981-300066	Bottom Feedwheel Bearing Backer Plate (Start 8/04)
b.	955-1001-12	955-1001-12	Bottom Feedwheel Bearing Backer Plate (Pre 8/04)

Copyright 8/07

MODEL 254

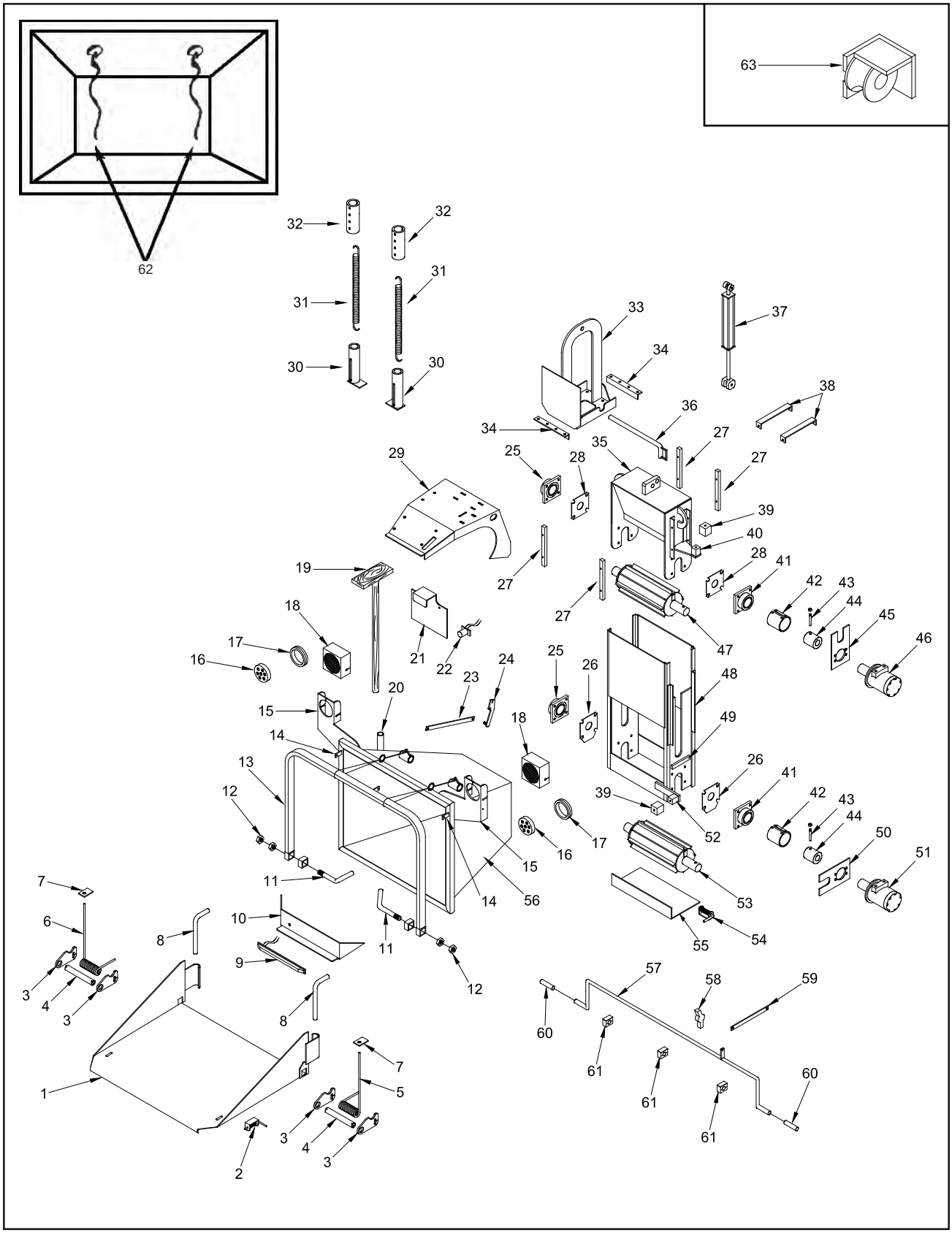

NOTE: Parts may not be exactly as shown.

Bandit

MODEL 254

LOCATION	STANDARD PART NUMBER	SUPER SIZED PART NUMBER	DESCRIPTION
27 a.	980-0138-10	980-0138-10	Yoke Slide - 1” x 1” x 11 1/2” (Start 4/04)
b.	980-0111-08	980-0111-08	Yoke Slide - 3/4” x 1” x 11 1/2” (Pre 4/04)
28 a.	980-300083	980-300083	Top Feedwheel Bearing Backer Plate (Start 8/04)
b.	980-0114-97	980-0114-97	Top Feedwheel Bearing Backer Plate (Pre 8/04)
29.	914-200012	914-200012	Winch and Valve Mount
30 a.	981-300031	981-300031	Bottom Mount for Easy Climb System
b.	900-4905-79	900-4905-79	Clevis Pin (Not Shown)
c.	900-4905-80	900-4905-80	Cotter Pin for Clevis Pin (Not Shown)
d.	900-4900-36	900-4900-36	Flat Washer (Not Shown)
31 a.	900-4903-81	900-4903-81	Yoke Spring
b.	900-4902-02	900-4902-02	Spring Adjuster (Pre 9/99) (Not Shown)
32 a.	981-300030	981-300030	Top Mount for Easy Climb System
b.	900-4905-14	900-4905-14	Clevis Pin (Not Shown)
c.	900-4905-19	900-4905-19	Hair Pin for Clevis Pin (Not Shown)
33 a.	914-200025	914-200025	Yoke Lift Assembly (Start 6/05)
b.	914-0502-58	914-0502-58	Yoke Lift Assembly (3/02 to 6/05)
c.	955-0500-36	955-0500-36	Yoke Lift Assembly (Pre 3/02)
d.	980-300333	980-300333	Top Yoke Plate Without Yoke Lift (Not Shown)
34.	955-1005-76	955-1005-76	Yoke Lift / Top Plate Angle Mount
35 a.	914-200026	914-200028	Top Yoke Assembly (Start 8/04)
b.	955-0500-19	914-0503-25	Top Yoke Assembly (Pre 8/04)
36 a.	981-300148	981-1007-36	Yoke Lock Pin (Start 6/05)
b.	955-1005-80	955-1005-80	Yoke Lock Pin (Pre 6/05)
37 a.	900-3925-05	900-3925-05	Yoke Lift Cylinder-Welded (Start 3/02)
b.	900-3903-00	900-3903-00	Yoke Lift Cylinder-Tie Rod (Start 3/02)
c.	900-3925-06	900-3925-06	Yoke Lift Cylinder-Welded (Pre 3/02)
d.	900-3908-16	900-3908-16	Yoke Lift Cylinder-Tie Rod (Pre 3/02)
e.	904-0007-14	904-0007-14	Pin For Welded Cylinder (Not Shown)
f.	900-4913-23	900-4913-23	Rubber Washer - Top Of Cylinder (Not Shown)
38.	955-1005-81	955-1005-81	Top Yoke Strap (Pre 6/05)
39.	937-900009	937-900009	Torque Arm Cushion
40 a.	981-300199	981-300199	Top Torque Arm Stop (Start 4/06)
b.	937-300316	937-300316	Torque Arm Cushion Mount (Start 4/06)
c.	981-1006-71	981-1006-71	Top Torque Arm Stop (Pre 4/06)
d.	955-1014-01	955-1014-01	Torque Arm Stop Block (Pre 4/06)
41 a.	900-1909-80	900-1909-80	Feedwheel Bearing (Grip-Tight Style) (Start 8/04)
b.	900-4912-37	900-4912-37	Top Feedwheel Bearing Bolt (Start 8/04)
c.	900-4909-23	900-4909-23	Bottom Feedwheel Bearing Bolt (Start 8/04)
d.	900-1900-66	900-1900-66	Feedwheel Bearing (Pre 8/04)
e.	900-4900-15	900-4900-15	Top Feedwheel Bearing Bolt (Pre 8/04)
f.	900-4900-16	900-4900-16	Bottom Feedwheel Bearing Bolt (Pre 8/04)
42 a.	900-7901-23	900-7901-23	Rubber Coupler Guard - 17 3/4” (Start 6/05)
b.	900-7900-38	900-7900-38	Rubber Coupler Guard - 15 3/4” (Pre 6/05)
c.	980-0508-57	980-0508-57	Coupler Guard Mount (Not Shown)
43 a.	900-4909-54	900-4909-54	Taper Pin With Nut (Start 6/05)
b.	900-4905-55	900-4905-55	Taper Pin Only (Pre 6/05)
44 a.	981-300140	981-300140	Coupler With Motor Nut and Taper Pin With Nut (Start 6/05)
b.	981-1006-45	981-1006-45	Coupler With Motor Nut and Taper Pin (Pre 6/05)

Copyright 8/07

MODEL 254

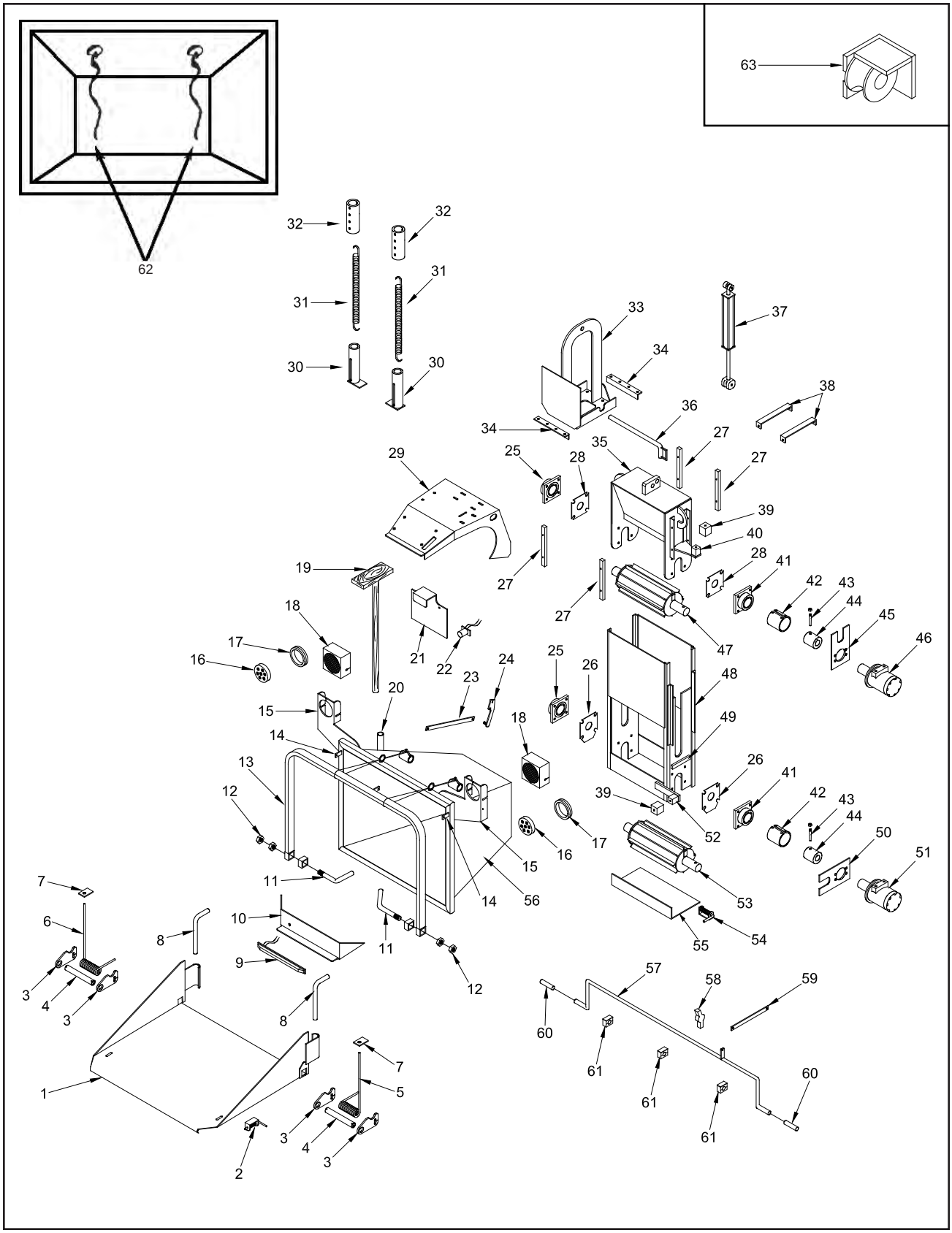

NOTE: Parts may not be exactly as shown.

Bandit

MODEL 254

LOCATION	STANDARD PART NUMBER	SUPER SIZED PART NUMBER	DESCRIPTION
45 a.	981-300197	981-300197	Top Torque Arm (Start 4/06)
b.	981-1006-44	981-1006-44	Top Torque Arm (Pre 4/06)
46.	900-3908-68	900-3908-68	Top Feedwheel Hydraulic Motor
47 a.	955-0500-47	914-0503-27	Top Feedwheel Assembly
b.	914-1010-13	914-1015-97	Top Feedwheel Tooth
c.	955-0500-46	914-0502-86	Top Feedwheel Shaft & Coupler Assembly
48 a.	914-200027	914-200029	Feedwheel Slide Box Assembly (Start 8/04)
b.	914-0502-57	914-0503-26	Feedwheel Slide Box Assembly (Pre 8/04)
49.	955-1002-45	955-1002-45	Yoke Stop Block
50 a.	981-300196	981-300196	Bottom Torque Arm (Start 4/06)
b.	981-1006-43	981-1006-43	Bottom Torque Arm (Pre 4/06)
51.	900-3908-67	900-3908-67	Bottom Feedwheel Hydraulic Motor
52 a.	981-300198	981-300198	Bottom Torque Arm Stop (Start 4/06)
b.	937-300316	937-300316	Torque Arm Cushion Mount (Start 4/06)
c.	981-1006-71	981-1006-71	Bottom Torque Arm Stop (Pre 4/06)
d.	955-1014-01	955-1014-01	Torque Arm Stop Block (Pre 4/06)
53 a.	914-0502-52	914-0503-28	Bottom Feedwheel Assembly
b.	914-1010-13	914-1015-97	Bottom Feedwheel Tooth
c.	955-0500-46	914-0502-86	Bottom Feedwheel Shaft & Coupler Assembly
54.	900-4901-83	900-4901-83	Trap Door Spring Lock
55 a.	955-0500-37	914-100020	Trap Door Assembly
b.	981-1000-60	981-1000-60	Hinge For Trap Door (Not Shown)
56 a.	914-200008	914-200009	Infeed Hopper Assembly (Start 9/04)
b.	914-0502-50	914-0503-29	Infeed Hopper Assembly (Pre 9/04)
57.	980-300065	980-300065	Dual Yoke Lift Control Bar
58.	900-3930-96	900-3930-96	Short Valve Handle - Lift Cylinder Control Linkage
59.	980-300157	980-300157	Control Arm - Dual Yoke Lift - 12 1/2”
60.	900-7900-96	900-7900-96	Rubber Cap - Dual Yoke Lift Control Bar
61.	900-3914-02	900-3914-02	Clamp - Lift Control Bar
62.	980-0508-64	980-0508-64	Last Chance Cable Assembly
63.	980-0510-10	980-0510-10	Yoke Roller Assembly - Specify Right Or Left Hand (Pre 2/03)
64.	955-1005-90	914-1015-93	Bottom Feedwheel Scrapper Bar (Not Shown)

Copyright 8/07

MODEL 250 QUAD FEED

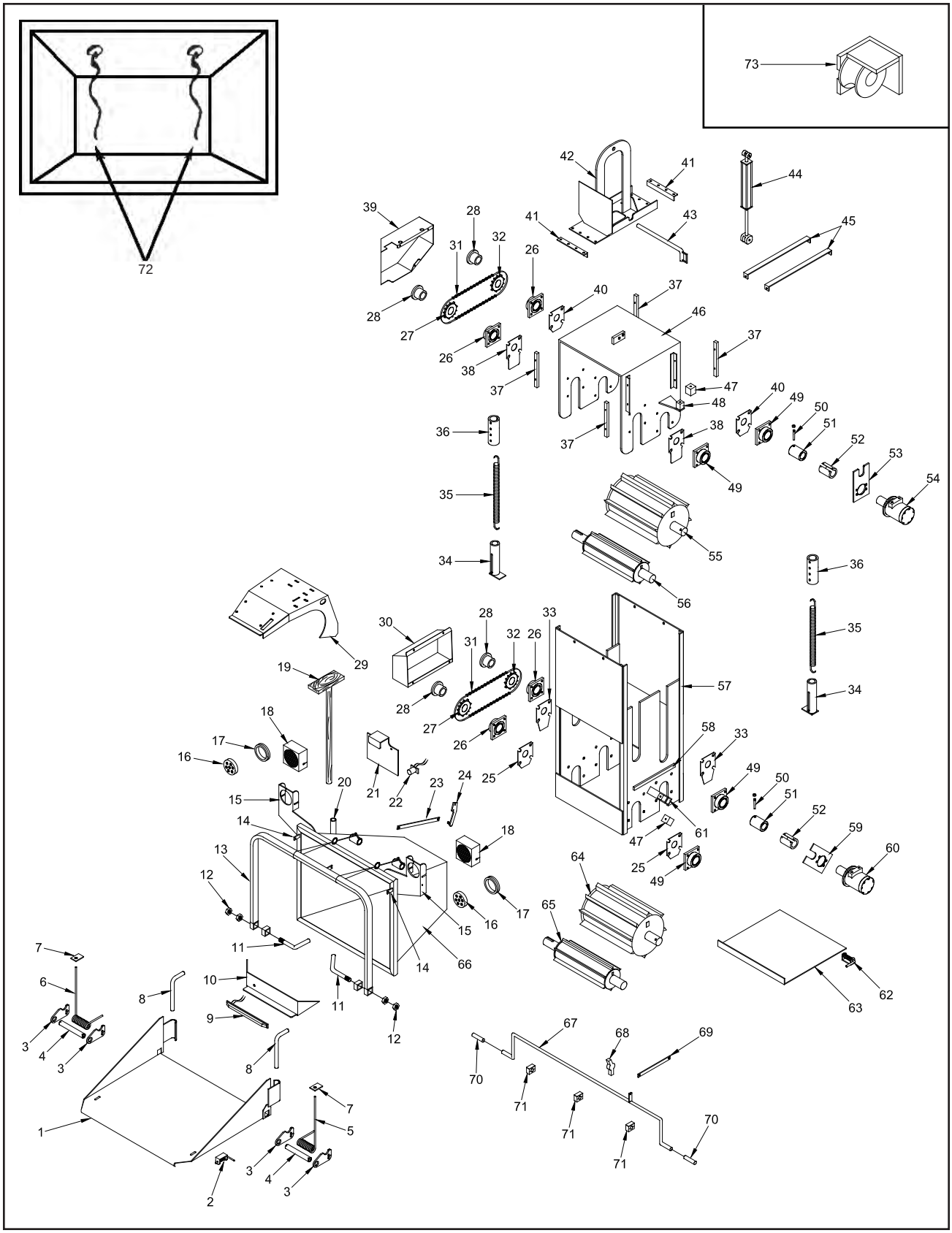

NOTE: Parts may not be exactly as shown.

Copyright 8/07

MODEL 250 QUAD FEED

LOCATION	STANDARD PART NUMBER	SUPER SIZED PART NUMBER	DESCRIPTION
1.	980-200055	980-200055	30” Folding Pan For Infeed Hopper
2 a.	900-4901-83	900-4901-83	Folding Pan Spring Lock - 1/2” Diameter Pin
b.	900-7900-93	900-7900-93	Rubber Cap For Spring Lock - 1/2” Diameter
3 a.	981-300320	981-300320	Spring Mount For Spring Assist - 2” x 3” Rim
b.	980-0129-66	980-0129-66	Spring Mount For Spring Assist - 2” Dia. Rim
4 a.	980-0129-86	980-0129-86	Spring Tube For Spring Assist
b.	900-4905-45	900-4905-45	Cotter Pin For Spring Tube (Not Shown)
5 a.	900-4905-40	900-4905-40	Right Spring For Spring Assist
b.	980-0509-56	980-0509-56	Spring Assist Kit (Includes 3 Through 7)
6 a.	900-4905-39	900-4905-39	Left Spring For Spring Assist
b.	980-0509-56	980-0509-56	Spring Assist Kit (Includes 3 Through 7)
7.	980-0133-34	980-0133-34	Top Spring Block (Specify Length 1 1/2” or 2 1/2”)
8 a.	955-300086	955-300086	Folding Pan Lock Pin
b.	900-7900-96	900-7900-96	Rubber Cap For Lock Pin
9.	900-2909-93	900-2909-93	LED 3 Light Bar
10.	980-300118	980-300118	Mount For LED 3 Light Bar
11 a.	981-300151	981-300151	Right Pivot Pin
b.	981-300152	981-300152	Left Pivot Pin
12.	900-4900-44	900-4900-44	Pivot Pin Jam Nut
13.	980-300002	980-300002	Control Handle
14.	980-0131-65	980-0131-65	Folding Pan Lock Tab For 1/2” Diameter Pin
15 a.	980-200176	980-200176	Tail Light Mount - Road Side
b.	980-200177	980-200177	Tail Light Mount - Curb Side
16 a.	900-2908-76	900-2908-76	LED Tail Light
b.	900-2908-74	900-2908-74	Adapter Wire for LED Tail Light (Not Shown)
17.	900-2908-75	900-2908-75	Rubber Grommet for LED Tail Light
18.	980-0508-72	980-0508-72	Heavy Duty Tail Light Cover
19.	981-1005-30	980-200147	Wooden Push Paddle
20.	980-0122-55	980-0122-55	Wooden Push Paddle Mount
21.	980-300181	980-300181	License Plate and Light Mount
22.	900-2900-07	900-2900-07	License Plate Light
23 a.	980-100139	980-100139	Hydraulic Control Arm - 20 1/2” (Start 8/04)
b.	980-0123-94	980-0123-94	Hydraulic Control Arm - 17” (Pre 8/04)
24.	980-100141	980-100141	Feedwheel Control Valve Linkage
25 a.	981-300066	981-300066	Bottom Climber Feedwheel Bearing Backer Plate (Start 8/04)
b.	955-1001-12	955-1001-12	Bottom Climber Feedwheel Bearing Backer Plate (Pre 8/04)
26 a.	900-1909-79	900-1909-79	Feedwheel Bearing (Set Screw Style)(Start 8/04)
b.	900-1909-81	900-1909-81	Feedwheel Bearing - Debris (Set Screw Style)(Start 8/04)
c.	900-4912-37	900-4912-37	Feedwheel Bearing Bolt
d.	900-1900-66	900-1900-66	Feedwheel Bearing (Pre 8/04)
e.	900-4900-15	900-4900-15	Top Feedwheel Bearing Bolt (Pre 8/04)
f.	900-4900-16	900-4900-16	Bottom Feedwheel Bearing Bolt (Pre 8/04)
27.	900-1906-69	900-1906-69	Climber Feedwheel Sprocket (16 Teeth)
28.	900-1904-85	900-1904-85	Sprocket Bushing
29.	981-200048	981-200048	Winch and Valve Mount

Copyright 8/07

MODEL 250 QUAD FEED

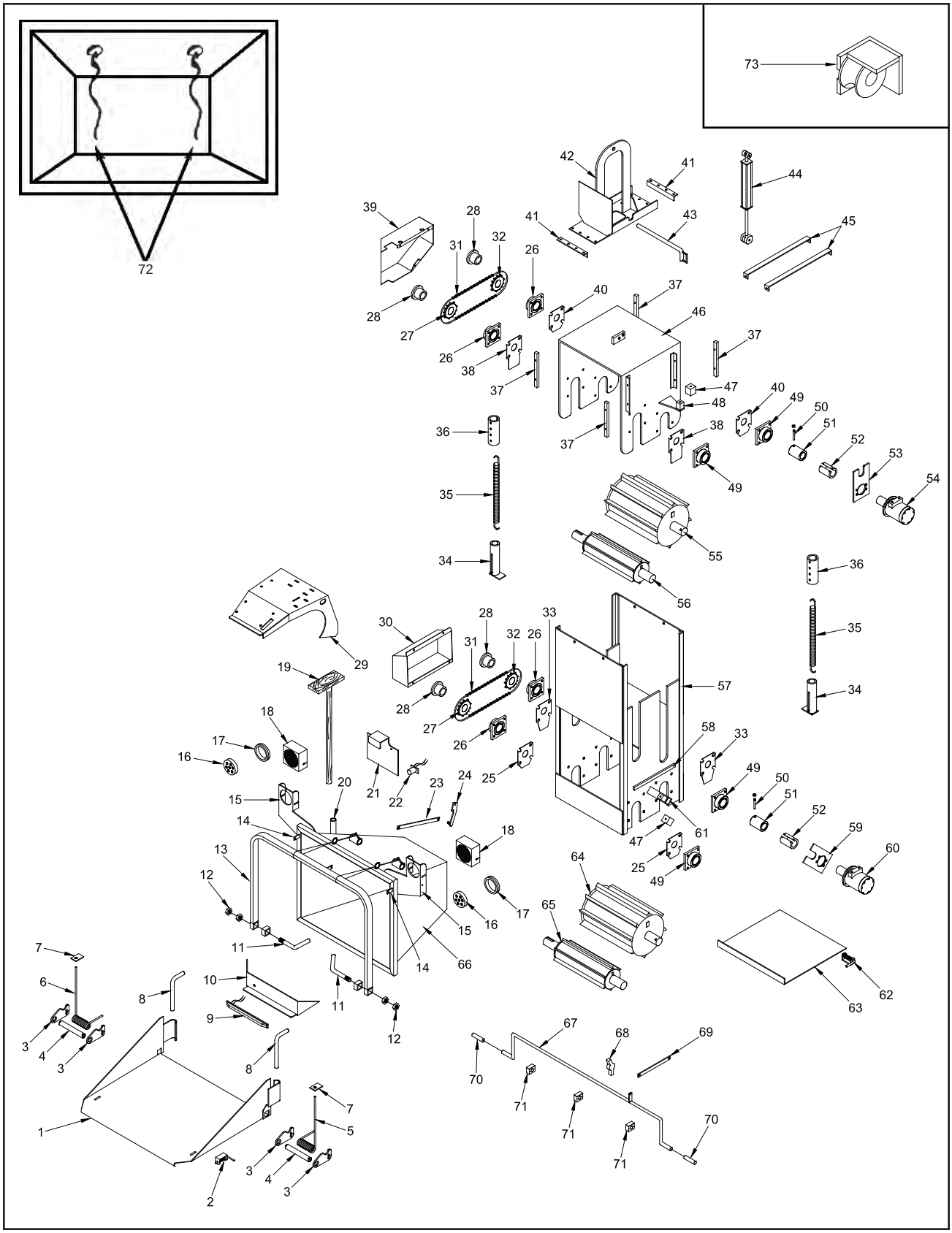

NOTE: Parts may not be exactly as shown.

Copyright 8/07

MODEL 250 QUAD FEED

LOCATION	STANDARD PART NUMBER	SUPER SIZED PART NUMBER	DESCRIPTION
30.	981-0501-78	981-0501-78	Bottom Feedwheel Chain Guard Assembly
31 a.	900-1904-81	900-1904-81	Feedwheel Chain
b.	900-1904-83	900-1904-83	Master Link (Not Shown)
c.	900-1904-82	900-1904-82	Half Link (Not Shown)
32.	900-1906-68	900-1906-68	Drive Feedwheel Sprocket (24 Teeth)
33 a.	981-300066	981-300066	Bottom Feedwheel Bearing Backer Plate (Start 8/04)
b.	955-1001-12	955-1001-12	Bottom Feedwheel Bearing Backer Plate (Pre 8/04)
34 a.	981-300031	981-300031	Bottom Mount for Easy Climb System
b.	900-4905-79	900-4905-79	Clevis Pin (Not Shown)
c.	900-4905-80	900-4905-80	Cotter Pin for Clevis Pin (Not Shown)
d.	900-4900-36	900-4900-36	Flat Washer (Not Shown)
35 a.	900-4900-04	900-4900-04	Yoke Spring
b.	900-4902-02	900-4902-02	Spring Adjuster (Pre 9/99) (Not Shown)
36 a.	981-300030	981-300030	Top Mount for Easy Climb System
b.	900-4905-14	900-4905-14	Clevis Pin (Not Shown)
c.	900-4905-19	900-4905-19	Hair Pin for Clevis Pin (Not Shown)
37 a.	980-0138-10	980-0138-10	Yoke Slide - 1” x 1” x 11 1/2” (Start 4/04)
b.	955-1016-99	955-1016-99	Yoke Slide - 1” x 1” x 16” (8/03 To 4/04)
38 a.	981-300042	981-300042	Top Climber Feedwheel Bearing Backer Plate (Start 8/04)
b.	981-1007-52	981-1007-52	Top Climber Feedwheel Bearing Backer Plate (Pre 8/04)
39.	981-0501-79	981-0501-79	Top Feedwheel Chain Guard Assembly
40 a.	980-300083	980-300083	Top Feedwheel Bearing Backer Plate (Start 8/04)
b.	980-0114-97	980-0114-97	Top Feedwheel Bearing Backer Plate (Pre 8/04)
41.	955-1005-76	955-1005-76	Yoke Lift / Top Plate Angle Mount
42 a.	981-200070	981-200070	Yoke Lift Assembly (Start 6/05)
b.	981-0501-80	981-0501-80	Yoke Lift Assembly (Pre 6/05)
c.	981-300200	981-300200	Top Yoke Plate Without Yoke Lift (Not Shown)
43.	981-1007-36	981-1007-36	Yoke Lock Pin
44 a.	900-3925-04	900-3925-04	Yoke Lift Cylinder-Welded
b.	900-3903-49	900-3903-49	Yoke Lift Cylinder-Tie Rod
c.	904-0007-14	904-0007-14	Pin For Welded Cylinder (Not Shown)
d.	900-4913-23	900-4913-23	Rubber Washer - Top Of Cylinder (Not Shown)
45.	981-1007-93	981-1007-93	Top Yoke Strap (Pre 6/05)
46 a.	981-200078	981-200076	Top Yoke Assembly (Start 8/04)
b.	981-0501-70	981-0502-16	Top Yoke Assembly (Pre 8/04)
47.	937-900009	937-900009	Torque Arm Cushion (Start 4/06)
48 a.	981-300199	981-300199	Top Torque Arm Stop (Start 4/06)
b.	937-300316	937-300316	Torque Arm Cushion Mount (Start 4/06)
c.	981-1006-71	981-1006-71	Top Torque Arm Stop (Pre 4/06)
d.	955-1014-01	955-1014-01	Torque Arm Stop Block (Pre 4/06)
49 a.	900-1909-80	900-1909-80	Feedwheel Bearing (Grip-Tight Style) (Start 8/04)
b.	900-4912-37	900-4912-37	Top Feedwheel Bearing Bolt (Start 8/04)
c.	900-4909-23	900-4909-23	Bottom Feedwheel Bearing Bolt (Start 8/04)
d.	900-1900-66	900-1900-66	Feedwheel Bearing (Pre 8/04)
e.	900-4900-15	900-4900-15	Top Feedwheel Bearing Bolt (Pre 8/04)
f.	900-4900-16	900-4900-16	Bottom Feedwheel Bearing Bolt (Pre 8/04)

Copyright 8/07

MODEL 250 QUAD FEED

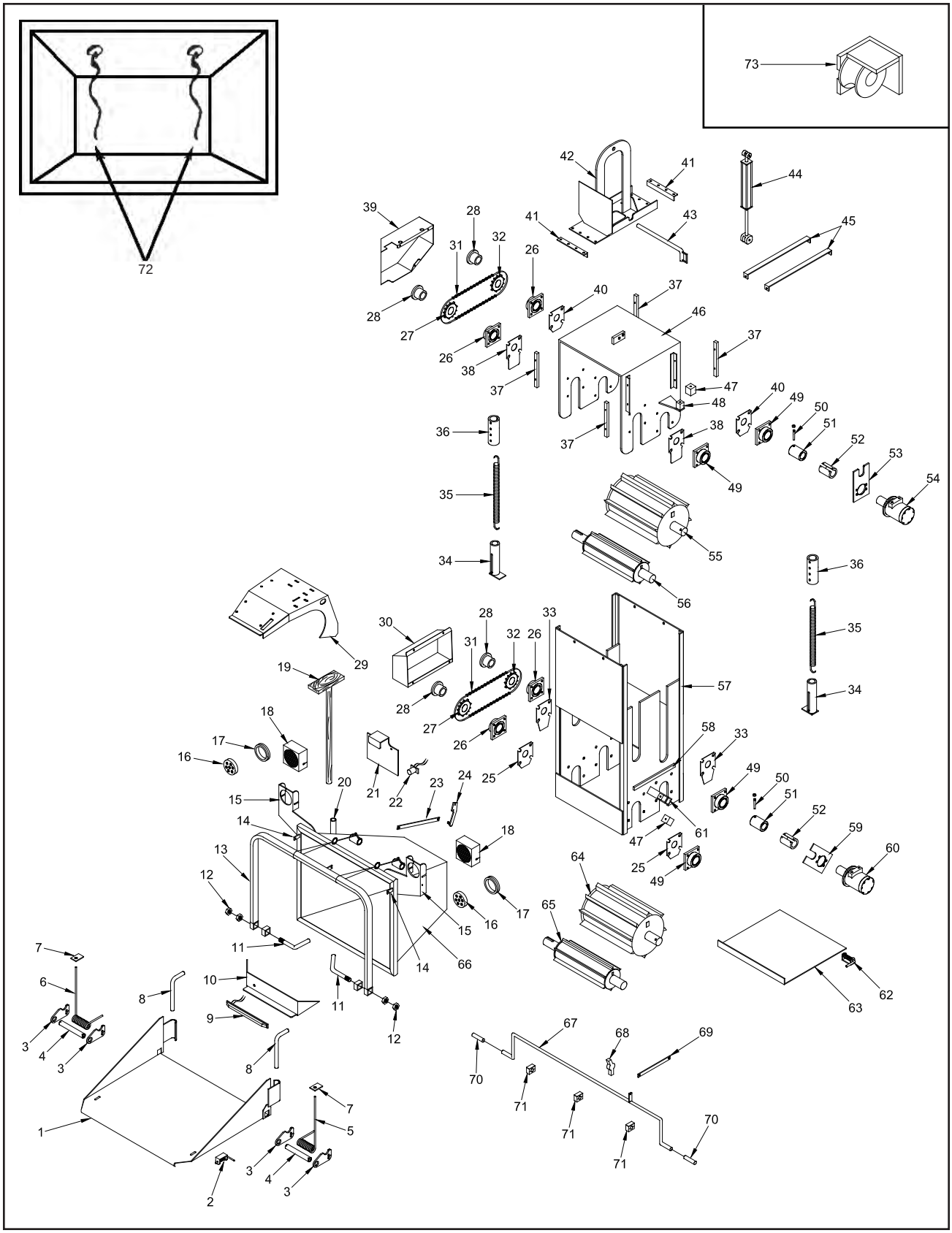

NOTE: Parts may not be exactly as shown.

Copyright 8/07

MODEL 250 QUAD FEED

LOCATION	STANDARD PART NUMBER	SUPER SIZED PART NUMBER	DESCRIPTION
50 a.	900-4909-54	900-4909-54	Taper Pin With Nut (Start 6/05)
b.	900-4905-55	900-4905-55	Taper Pin Only (Pre 6/05)
51 a.	981-300140	981-300140	Coupler With Motor Nut and Taper Pin With Nut (Start 6/05)
b.	981-1006-45	981-1006-45	Coupler With Motor Nut and Taper Pin (Pre 6/05)
52 a.	900-7901-23	900-7901-23	Rubber Coupler Guard - 17 3/4” (Start 6/05)
b.	900-7900-38	900-7900-38	Rubber Coupler Guard - 15 3/4” (Pre 6/05)
c.	980-0508-57	980-0508-57	Coupler Guard Mount (Not Shown)
53 a.	981-300197	981-300197	Top Torque Arm (Start 4/06)
b.	981-1006-44	981-1006-44	Top Torque Arm (Pre 4/06)
54.	900-3908-68	900-3908-68	Top Feedwheel Hydraulic Motor
55 a.	981-0501-72	981-0502-23	Top Feedwheel Assembly
b.	981-300191	981-300088	Top Feedwheel Tooth
c.	981-1007-40	981-0502-11	Top Feedwheel Shaft & Coupler Assembly
56 a.	981-0501-73	981-0502-19	Top Climber Feedwheel Assembly
b.	981-300191	981-300088	Top Climber Feedwheel Tooth
c.	981-1007-31	981-1008-79	Top Climber Feedwheel Shaft
57 a.	981-200023	981-200077	Feedwheel Slide Box Assembly (Start 8/04)
b.	981-0501-69	981-0502-17	Feedwheel Slide Box Assembly (Pre 8/04)
58.	981-1007-66	981-1007-66	Yoke Stop Block
59 a.	981-300196	981-300196	Bottom Torque Arm (Start 4/06)
b.	981-1006-43	981-1006-43	Bottom Torque Arm (Pre 4/06)
60.	900-3908-67	900-3908-67	Bottom Feedwheel Hydraulic Motor
61 a.	981-300198	981-300198	Bottom Torque Arm Stop (Start 4/06)
b.	937-300316	937-300316	Torque Arm Cushion Mount (Start 4/06)
c.	981-1006-71	981-1006-71	Bottom Torque Arm Stop (Pre 4/06)
d.	955-1014-01	955-1014-01	Torque Arm Stop Block (Pre 4/06)
62.	900-4901-83	900-4901-83	Trap Door Spring Lock
63 a.	981-0501-85	981-0502-21	Trap Door Assembly
b.	981-1000-60	981-1000-60	Hinge For Trap Door (Not Shown)
64 a.	981-0501-90	981-0502-24	Bottom Feedwheel Assembly
b.	981-300191	981-300088	Bottom Feedwheel Tooth
c.	981-1007-40	981-0502-11	Bottom Feedwheel Shaft & Coupler Assembly
65 a.	981-0501-75	981-0502-20	Bottom Climber Feedwheel Assembly
b.	981-300191	981-300088	Bottom Climber Feedwheel Tooth
c.	981-1007-31	981-1008-79	Bottom Climber Feedwheel Shaft
66 a.	981-200021	981-200022	Infeed Hopper Assembly (Start 9/04)
b.	981-0500-69	981-0502-18	Infeed Hopper Assembly (Pre 9/04)
67.	980-300065	980-300065	Dual Yoke Lift Control Bar
68.	900-3930-96	900-3930-96	Short Valve Handle - Lift Cylinder Control Linkage
69.	980-300157	980-300157	Control Arm - Dual Yoke Lift - 12 1/2”
70.	900-7900-96	900-7900-96	Rubber Cap - Dual Yoke Lift Control Bar
71.	900-3914-02	900-3914-02	Clamp - Lift Control Bar
72.	980-0508-64	980-0508-64	Last Chance Cable Assembly
73.	980-0510-10	980-0510-10	Yoke Roller Assembly - Specify Right Or Left Hand (Pre 2/03)
74.	981-1002-45	981-1008-47	Bottom Feedwheel Scrapper Bar (Not Shown)

Copyright 8/07

MODEL 254 QUAD FEED

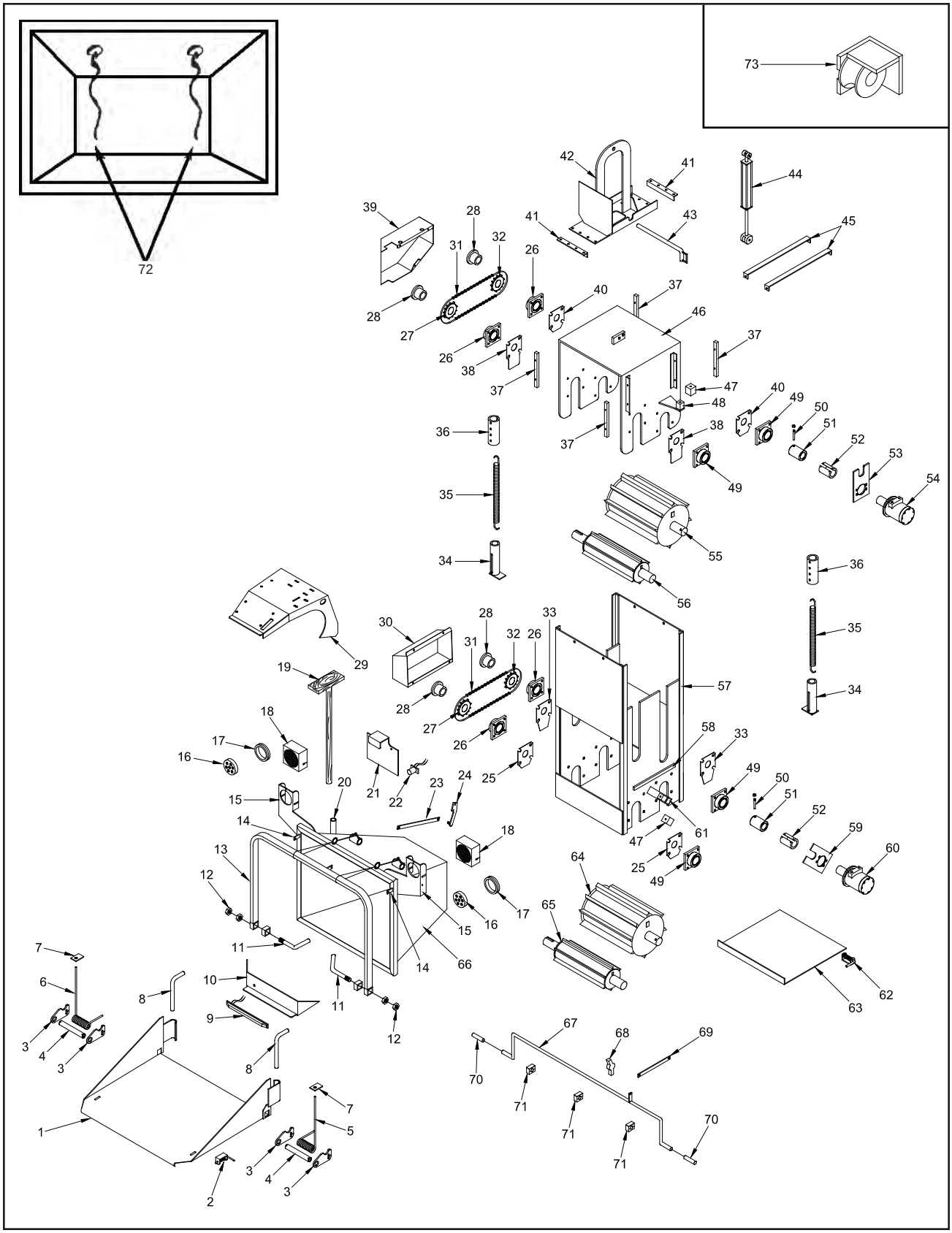

NOTE: Parts may not be exactly as shown.

Copyright 8/07

MODEL 254 QUAD FEED

LOCATION	STANDARD PART NUMBER	SUPER SIZED PART NUMBER	DESCRIPTION
1.	955-200022	955-200022	30” Folding Pan For Infeed Hopper
2 a.	900-4904-90	900-4904-90	Folding Pan Spring Lock - 3/4” Diameter Pin
b.	900-4901-83	900-4901-83	Folding Pan Spring Lock - 1/2” Diameter Pin
c.	900-7900-96	900-7900-96	Rubber Cap For Spring Lock - 3/4” Diameter
d.	900-7900-93	900-7900-93	Rubber Cap For Spring Lock - 1/2” Diameter
3 a.	981-300320	981-300320	Spring Mount For Spring Assist - 2” x 3” Rim
b.	980-0129-66	980-0129-66	Spring Mount For Spring Assist - 2” Dia. Rim
4 a.	980-0129-86	980-0129-86	Spring Tube For Spring Assist
b.	900-4905-45	900-4905-45	Cotter Pin For Spring Tube (Not Shown)
5 a.	900-4905-40	900-4905-40	Right Spring For Spring Assist
b.	980-0509-56	980-0509-56	Spring Assist Kit (Includes 3 Through 7)
6 a.	900-4905-39	900-4905-39	Left Spring For Spring Assist
b.	980-0509-56	980-0509-56	Spring Assist Kit (Includes 3 Through 7)
7.	980-0133-34	980-0133-34	Top Spring Block (Specify Length 1 1/2” or 2 1/2”)
8 a.	955-300086	955-300086	Folding Pan Lock Pin
b.	900-7900-96	900-7900-96	Rubber Cap For Lock Pin
9.	900-2909-93	900-2909-93	LED 3 Light Bar
10.	980-300118	980-300118	Mount For LED 3 Light Bar
11 a.	955-1007-66	955-1007-66	Right Pivot Pin
b.	955-1007-66	955-1007-66	Left Pivot Pin
12.	900-4900-44	900-4900-44	Pivot Pin Jam Nut
13.	980-300002	980-300002	Control Handle
14 a.	980-300302	980-300302	Folding Pan Lock Tab For 3/4” Diameter Pin
b.	980-0131-65	980-0131-65	Folding Pan Lock Tab For 1/2” Diameter Pin
15 a.	980-200176	980-200176	Tail Light Mount - Road Side
b.	980-200177	980-200177	Tail Light Mount - Curb Side
16 a.	900-2908-76	900-2908-76	LED Tail Light
b.	900-2908-74	900-2908-74	Adapter Wire for LED Tail Light (Not Shown)
17.	900-2908-75	900-2908-75	Rubber Grommet for LED Tail Light
18.	980-0508-72	980-0508-72	Heavy Duty Tail Light Cover
19.	981-1005-30	980-200147	Wooden Push Paddle
20.	980-0122-55	980-0122-55	Wooden Push Paddle Mount
21.	980-300181	980-300181	License Plate and Light Mount
22.	900-2900-07	900-2900-07	License Plate Light
23 a.	980-100139	980-100139	Hydraulic Control Arm - 20 1/2” (Start 8/04)
b.	980-0123-94	980-0123-94	Hydraulic Control Arm - 17” (Pre 8/04)
24.	980-100141	980-100141	Feedwheel Control Valve Linkage
25 a.	981-300066	981-300066	Bottom Climber Feedwheel Bearing Backer Plate (Start 8/04)
b.	955-1001-12	955-1001-12	Bottom Climber Feedwheel Bearing Backer Plate (Pre 8/04)
26 a.	900-1909-79	900-1909-79	Feedwheel Bearing (Set Screw Style)(Start 8/04)
b.	900-1909-81	900-1909-81	Feedwheel Bearing - Debris (Set Screw Style)(Start 8/04)
c.	900-4912-37	900-4912-37	Feedwheel Bearing Bolt
d.	900-1900-66	900-1900-66	Feedwheel Bearing (Pre 8/04)
e.	900-4900-15	900-4900-15	Top Feedwheel Bearing Bolt (Pre 8/04)
f.	900-4900-16	900-4900-16	Bottom Feedwheel Bearing Bolt (Pre 8/04)
27.	900-1906-69	900-1906-69	Climber Feedwheel Sprocket (16 Teeth)
28.	900-1904-85	900-1904-85	Sprocket Bushing
29.	981-200048	981-200048	Winch and Valve Mount

Copyright 8/07

MODEL 254 QUAD FEED

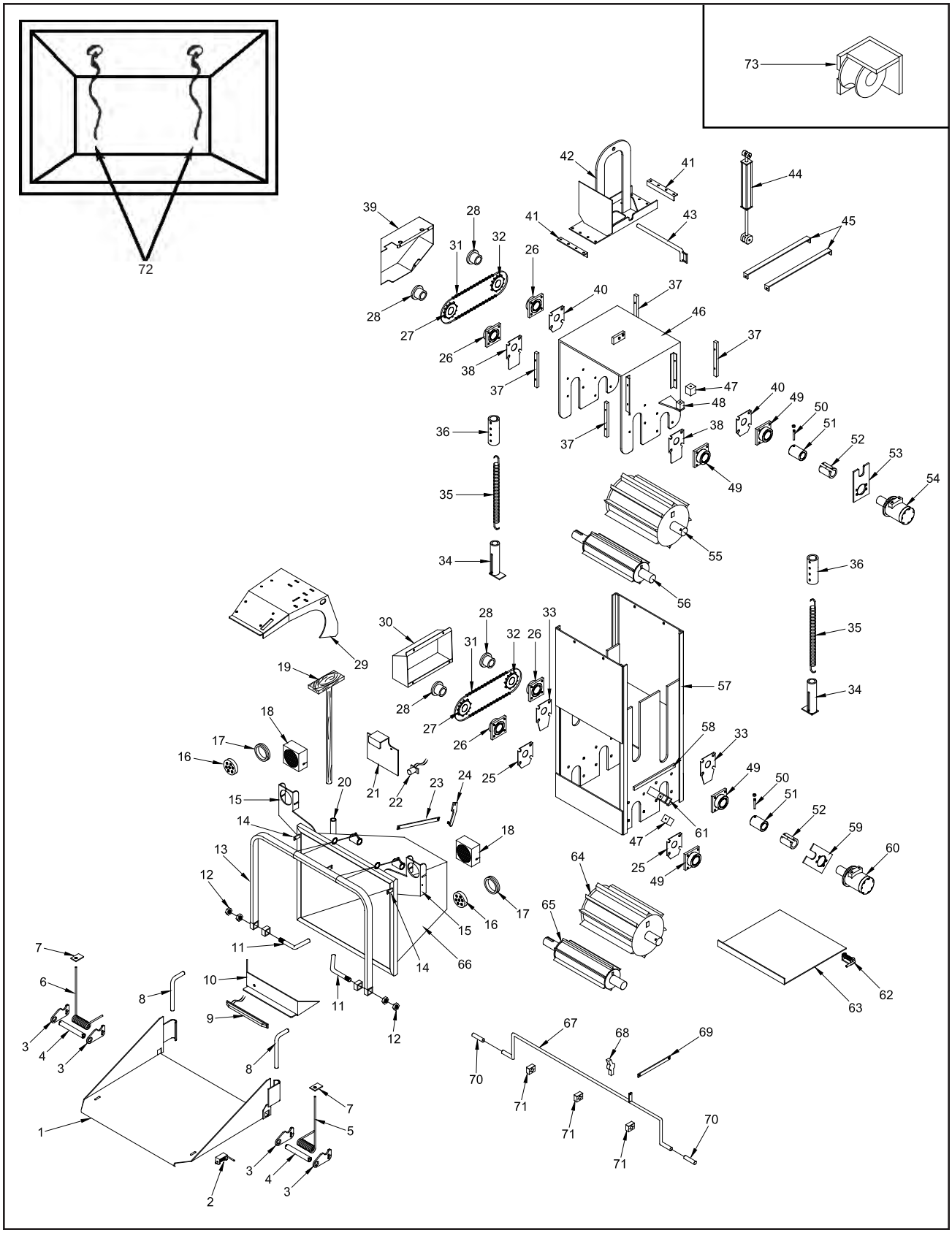

NOTE: Parts may not be exactly as shown.

Copyright 8/07

MODEL 254 QUAD FEED

LOCATION	STANDARD PART NUMBER	SUPER SIZED PART NUMBER	DESCRIPTION
30.	914-0502-68	914-0502-68	Bottom Feedwheel Chain Guard Assembly
31 a.	900-1904-81	900-1904-81	Feedwheel Chain
b.	900-1904-83	900-1904-83	Master Link (Not Shown)
c.	900-1904-82	900-1904-82	Half Link (Not Shown)
32.	900-1906-68	900-1906-68	Drive Feedwheel Sprocket (24 Teeth)
33 a.	981-300066	981-300066	Bottom Feedwheel Bearing Backer Plate (Start 8/04)
b.	955-1001-12	955-1001-12	Bottom Feedwheel Bearing Backer Plate (Pre 8/04)
34 a.	981-300031	981-300031	Bottom Mount for Easy Climb System
b.	900-4905-79	900-4905-79	Clevis Pin (Not Shown)
c.	900-4905-80	900-4905-80	Cotter Pin for Clevis Pin (Not Shown)
d.	900-4900-36	900-4900-36	Flat Washer (Not Shown)
35 a.	900-4903-81	900-4903-81	Yoke Spring
b.	900-4902-02	900-4902-02	Spring Adjuster (Pre 9/99) (Not Shown)
36 a.	981-300030	981-300030	Top Mount for Easy Climb System
b.	900-4905-14	900-4905-14	Clevis Pin (Not Shown)
c.	900-4905-19	900-4905-19	Hair Pin for Clevis Pin (Not Shown)
37 a.	980-0138-10	980-0138-10	Yoke Slide - 1” x 1” x 11 1/2” (Start 4/04)
b.	955-1016-99	955-1016-99	Yoke Slide - 3/4” x 1” x 16” (8/03 To 4/04)
38 a.	981-300042	981-300042	Top Climber Feedwheel Bearing Backer Plate (Start 8/04)
b.	981-1007-52	981-1007-52	Top Climber Feedwheel Bearing Backer Plate (Pre 8/04)
39.	914-0502-67	914-0502-67	Top Feedwheel Chain Guard Assembly
40 a.	980-300083	980-300083	Top Feedwheel Bearing Backer Plate (Start 8/04)
b.	980-0114-97	980-0114-97	Top Feedwheel Bearing Backer Plate (Pre 8/04)
41.	955-1005-76	955-1005-76	Yoke Lift / Top Plate Angle Mount
42 a.	981-200070	981-200070	Yoke Lift Assembly Without Loader (Start 6/05)
b.	914-0502-73	914-0502-73	Yoke Lift Assembly Without Loader (Pre 6/05)
c.	914-0503-30	914-0503-30	Yoke Lift Assembly With Loader
d.	981-300200	981-300200	Top Yoke Plate Without Yoke Lift (Not Shown)
43.	981-1007-36	981-1007-36	Yoke Lock Pin
44 a.	900-3925-05	900-3925-05	Yoke Lift Cylinder-Welded (Start 3/02)
b.	900-3903-00	900-3903-00	Yoke Lift Cylinder-Tie Rod (Start 3/02)
c.	900-3925-06	900-3925-06	Yoke Lift Cylinder-Welded (Pre 3/02)
d.	900-3908-16	900-3908-16	Yoke Lift Cylinder-Tie Rod (Pre 3/02)
e.	904-0007-14	904-0007-14	Pin For Welded Cylinder (Not Shown)
f.	900-4913-23	900-4913-23	Rubber Washer - Top Of Cylinder (Not Shown)
45.	981-1007-93	981-1007-93	Top Yoke Strap (Pre 6/05)
46 a.	914-200033	914-200031	Top Yoke Assembly (Start 8/04)
b.	914-0502-74	914-0503-31	Top Yoke Assembly (Pre 8/04)
47.	937-900009	937-900009	Torque Arm Cushion (Start 4/06)
48 a.	981-300199	981-300199	Top Torque Arm Stop (Start 4/06)
b.	937-300316	937-300316	Torque Arm Cushion Mount (Start 4/06)
c.	981-1006-71	981-1006-71	Top Torque Arm Stop (Pre 4/06)
d.	955-1014-01	955-1014-01	Torque Arm Stop Block (Pre 4/06)
49 a.	900-1909-80	900-1909-80	Feedwheel Bearing (Grip-Tight Style) (Start 8/04)
b.	900-4912-37	900-4912-37	Top Feedwheel Bearing Bolt (Start 8/04)
c.	900-4909-23	900-4909-23	Bottom Feedwheel Bearing Bolt (Start 8/04)
d.	900-1900-66	900-1900-66	Feedwheel Bearing (Pre 8/04)
e.	900-4900-15	900-4900-15	Top Feedwheel Bearing Bolt (Pre 8/04)
f.	900-4900-16	900-4900-16	Bottom Feedwheel Bearing Bolt (Pre 8/04)

Copyright 8/07

MODEL 254 QUAD FEED

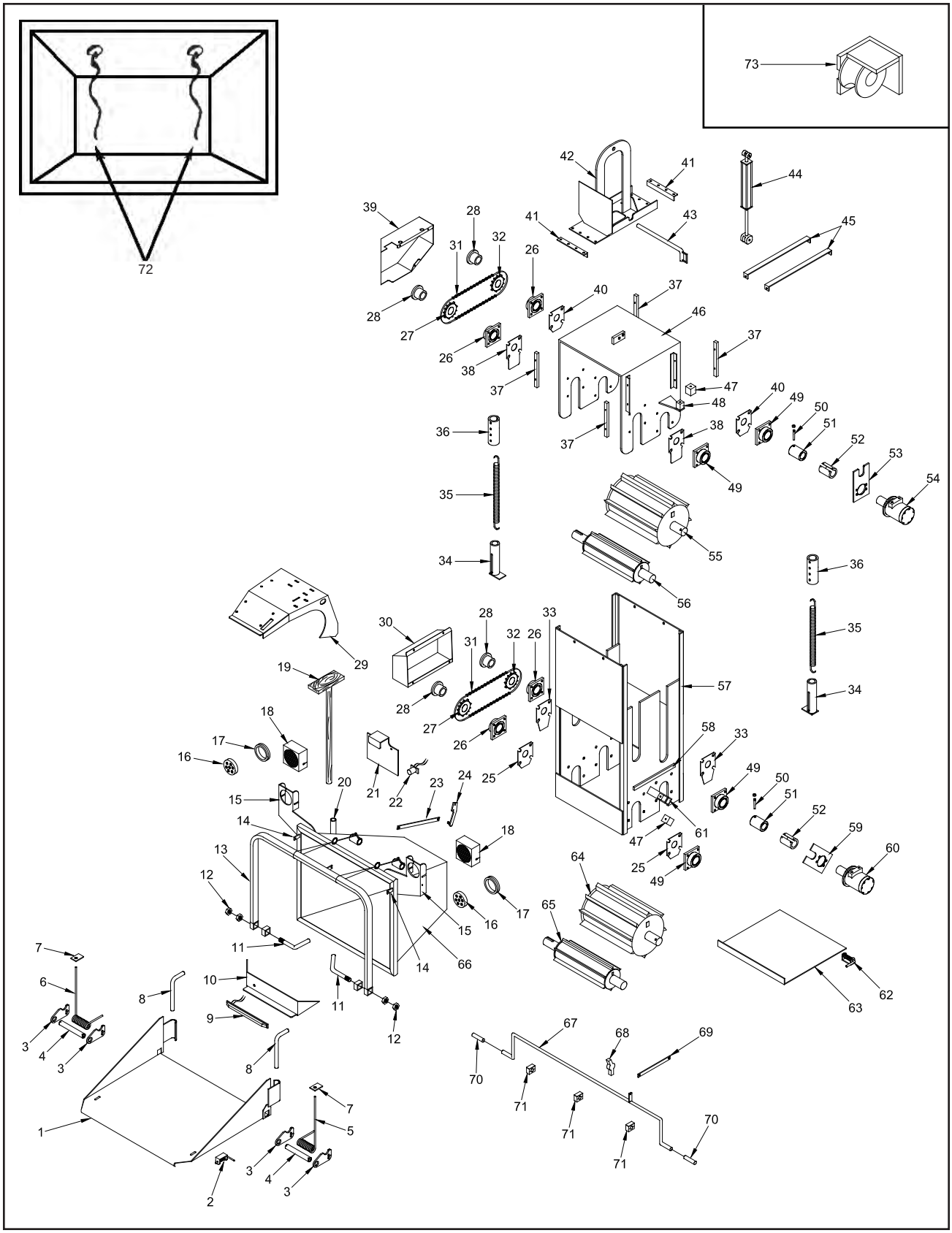

NOTE: Parts may not be exactly as shown.

Copyright 8/07

MODEL 254 QUAD FEED

LOCATION	STANDARD PART NUMBER	SUPER SIZED PART NUMBER	DESCRIPTION
50 a.	900-4909-54	900-4909-54	Taper Pin With Nut (Start 6/05)
b.	900-4905-55	900-4905-55	Taper Pin Only (Pre 6/05)
51 a.	981-300140	981-300140	Coupler With Motor Nut and Taper Pin With Nut (Start 6/05)
b.	981-1006-45	981-1006-45	Coupler With Motor Nut and Taper Pin (Pre 6/05)
52 a.	900-7901-23	900-7901-23	Rubber Coupler Guard - 17 3/4” (Start 6/05)
b.	900-7900-38	900-7900-38	Rubber Coupler Guard - 15 3/4” (Pre 6/05)
c.	980-0508-57	980-0508-57	Coupler Guard Mount (Not Shown)
53 a.	981-300199	981-300199	Top Torque Arm (Start 4/06)
b.	981-1006-44	981-1006-44	Top Torque Arm (Pre 4/06)
54.	900-3908-68	900-3908-68	Top Feedwheel Hydraulic Motor
55 a.	914-0502-76	914-0502-92	Top Feedwheel Assembly
b.	914-300030	914-1015-97	Top Feedwheel Tooth
c.	981-1007-41	914-0503-33	Top Feedwheel Shaft & Coupler Assembly
56 a.	914-0502-78	914-0502-94	Top Climber Feedwheel Assembly
b.	914-300030	914-1015-97	Top Climber Feedwheel Tooth
c.	981-1007-42	914-1015-95	Top Climber Feedwheel Shaft
57 a.	914-200034	914-200032	Feedwheel Slide Box Assembly (Start 8/04)
b.	914-0502-75	914-0502-99	Feedwheel Slide Box Assembly (Pre 8/04)
58.	981-1007-66	981-1007-66	Yoke Stop Block
59 a.	981-300196	981-300196	Bottom Torque Arm (Start 4/06)
b.	981-1006-43	981-1006-43	Bottom Torque Arm (Pre 4/06)
60.	900-3908-67	900-3908-67	Bottom Feedwheel Hydraulic Motor
61 a.	981-300198	981-300198	Bottom Torque Arm Stop (Start 4/06)
b.	937-300316	937-300316	Torque Arm Cushion Mount (Start 4/06)
c.	981-1006-71	981-1006-71	Bottom Torque Arm Stop (Pre 4/06)
d.	955-1014-01	955-1014-01	Torque Arm Stop Block (Pre 4/06)
62.	900-4901-83	900-4901-83	Trap Door Spring Lock
63 a.	981-0501-85	981-0502-21	Trap Door Assembly
b.	981-1000-60	981-1000-60	Hinge For Trap Door (Not Shown)
64 a.	914-0502-83	914-0503-35	Bottom Feedwheel Assembly
b.	914-300030	914-1015-97	Bottom Feedwheel Tooth
c.	981-1007-41	914-0503-33	Bottom Feedwheel Shaft & Coupler Assembly
65 a.	914-0502-79	914-0503-34	Bottom Climber Feedwheel Assembly
b.	914-300030	914-1015-97	Bottom Climber Feedwheel Tooth
c.	981-1007-42	914-1015-95	Bottom Climber Feedwheel Shaft
66 a.	914-200008	914-200009	Infeed Hopper Assembly (Start 9/04)
b.	914-0502-50	914-0503-29	Infeed Hopper Assembly (Pre 9/04)
67.	980-300065	980-300065	Dual Yoke Lift Control Bar
68.	900-3930-96	900-3930-96	Short Valve Handle - Lift Cylinder Control Linkage
69.	980-300157	980-300157	Control Arm - Dual Yoke Lift - 12 1/2”
70.	900-7900-96	900-7900-96	Rubber Cap - Dual Yoke Lift Control Bar
71.	900-3914-02	900-3914-02	Clamp - Lift Control Bar
72.	980-0508-64	980-0508-64	Last Chance Cable Assembly
73.	980-0510-10	980-0510-10	Yoke Roller Assembly - Specify Right Or Left Hand (Pre 2/03)
74.	955-1005-90	914-1015-93	Bottom Feedwheel Scrapper Bar (Not Shown)

Copyright 8/07

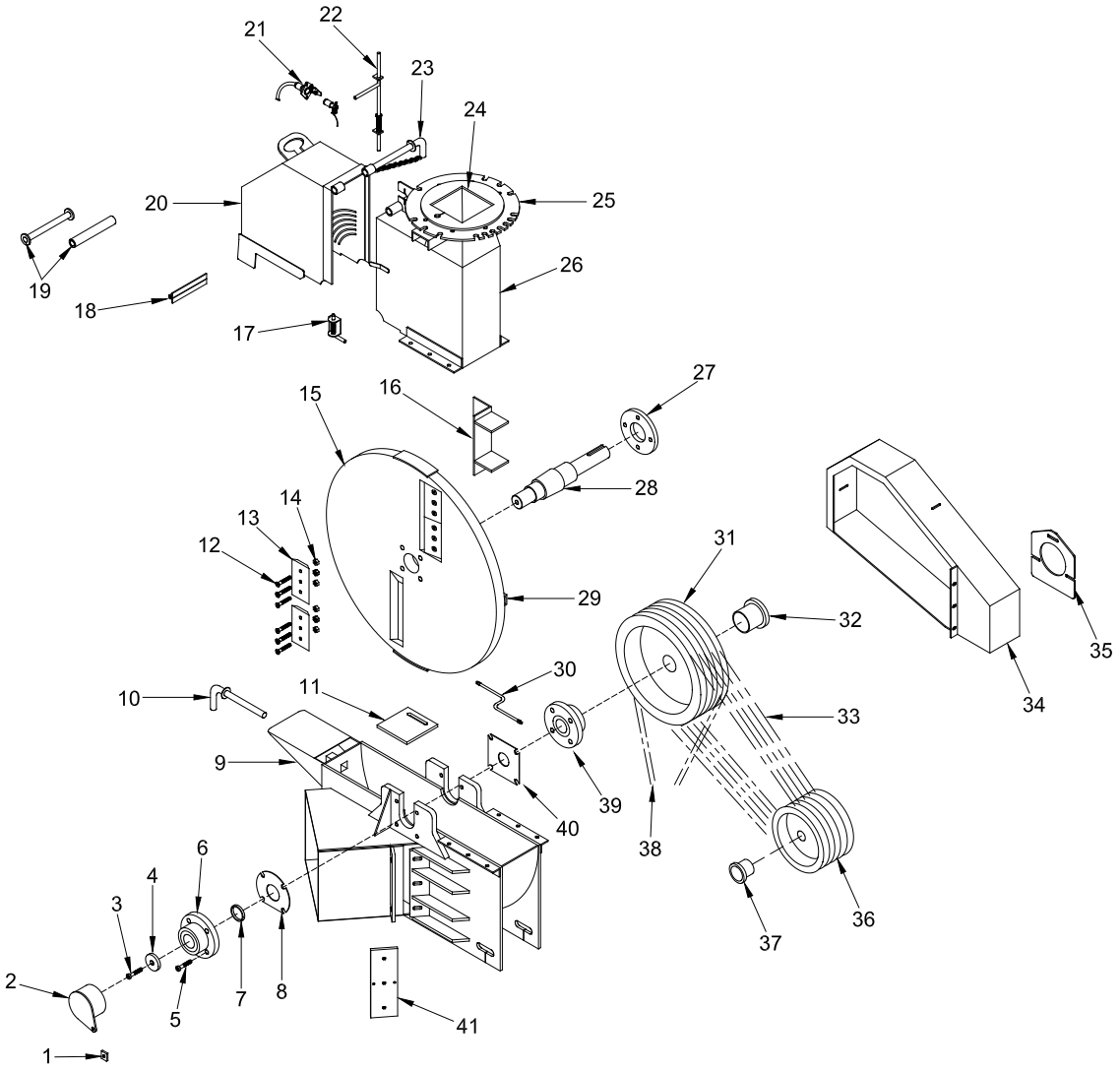

NOTE: Parts may not be exactly as shown.

Copyright 8/07

LOCATION	MODEL 250 PART NUMBER	MODEL 254 PART NUMBER	DESCRIPTION
1.	980-0119-57	980-0119-57	Front Chipper Bearing Cover Mount Tab
2.	980-200217	980-200217	Front Chipper Bearing Cover
3 a.	900-4902-78	900-4902-78	Bearing Retainer Bolt
b.	900-4900-33	900-4900-33	Bearing Retainer Bolt Lock Washer (Not Shown)
4.	980-0125-10	980-0125-10	Bearing Retainer
5.	900-4903-32	900-4903-32	Front Chipper Bearing Bolt
6.	900-1900-33	900-1900-33	Front Chipper Bearing
7 a.	980-0101-72	980-0101-72	1/16” Chipper Disc Spacer
b.	980-0101-73	980-0101-73	1/8” Chipper Disc Spacer
c.	980-0101-74	980-0101-74	3/16” Chipper Disc Spacer
d.	980-0101-75	980-0101-75	1/4” Chipper Disc Spacer
8.	980-0119-38	980-0119-38	Front Chipper Bearing Backer Plate (Optional)
9.	980-0134-14	914-300049	Hood Stop
10.	955-1015-32	955-1015-32	Chipper Disc Lock Pin
11.	981-1006-23	981-1008-07	Pump Mount (If Applicable)
12.	See Page 104	See Page 104	Chipper Knife Bolt
13.	See Page 104	See Page 104	Chipper Knife
14.	See Page 104	See Page 104	Chipper Knife Nut
15 a.	981-0501-67	914-0502-61	2-Knife Chipper Disc Ass’y With New Style 4 1/2” Wide Knives
b.	980-0503-69	914-0502-43	2-Knife Chipper Disc Ass’y With Old Style 4” Wide Knives
c.	981-0501-68	914-0502-62	3-Knife Chipper Disc Ass’y With New Style 4 1/2” Wide Knives
d.	981-0500-37	914-0502-44	3-Knife Chipper Disc Ass’y With Old Style 4” Wide Knives
16.	**	**	Fan Blade Assembly
17 a.	900-4904-90	900-4904-90	Discharge Spring Lock
b.	900-7900-96	900-7900-96	Rubber Cap (Not Shown)
18.	980-0101-59	980-0101-59	Hood Hinge (Model 254, Pre S/N 1538)
19 a.	N/A	914-300039	Hood Hinge Tube (Model 254, Start S/N 1538)
b.	N/A	914-300041	Hood Hinge Pin (Model 254, Start S/N 1538)
20.	980-0505-85	914-0503-54	Chipper Hood Hinged Half
21 a.	980-0509-04	980-0509-04	Engine Disable Plug Kit (Includes Hood Pin & Mounts)
b.	900-2904-13	900-2904-13	6-Prong Female Plug Only
c.	980-100083	980-100083	6-Prong Male Plug With Wire Loop & Crimp Sleeves
22 a.	980-0508-54	980-0508-54	Spring Lock For Hood Pin
b.	900-7900-93	900-7900-93	Black Vinyl Cap (Not Shown)
23 a.	980-0123-29	980-0123-29	Hood Pin With Attaching chain
b.	900-4902-20	900-4902-20	Padlock For Hood Pin (Not Shown)
c.	P812	P812	Key For Padlock (Not Shown)
24.	980-300349	914-300079	Bottom Swivel Flange
25 a.	980-300424	980-300424	Bottom Swivel Ring For Manual Swivel Discharge
b.	980-0128-23	980-0128-23	Bottom Swivel Ring For Hand Crank Swivel Discharge
c.	980-0122-18	980-0122-18	Bottom Swivel Ring For Hydraulic Swivel Discharge
26 a.	980-0505-27	914-0502-47	Chipper Hood Stationary Half - Manual Swivel Discharge
b.	980-0509-50	914-0503-37	Chipper Hood Stationary Half - Hand Crank Swivel Discharge
c.	980-0505-29	914-200014	Chipper Hood Stationary Half - Hydraulic Swivel Discharge

** Components vary with engine and disc options,
order by physical description.

Copyright 8/07

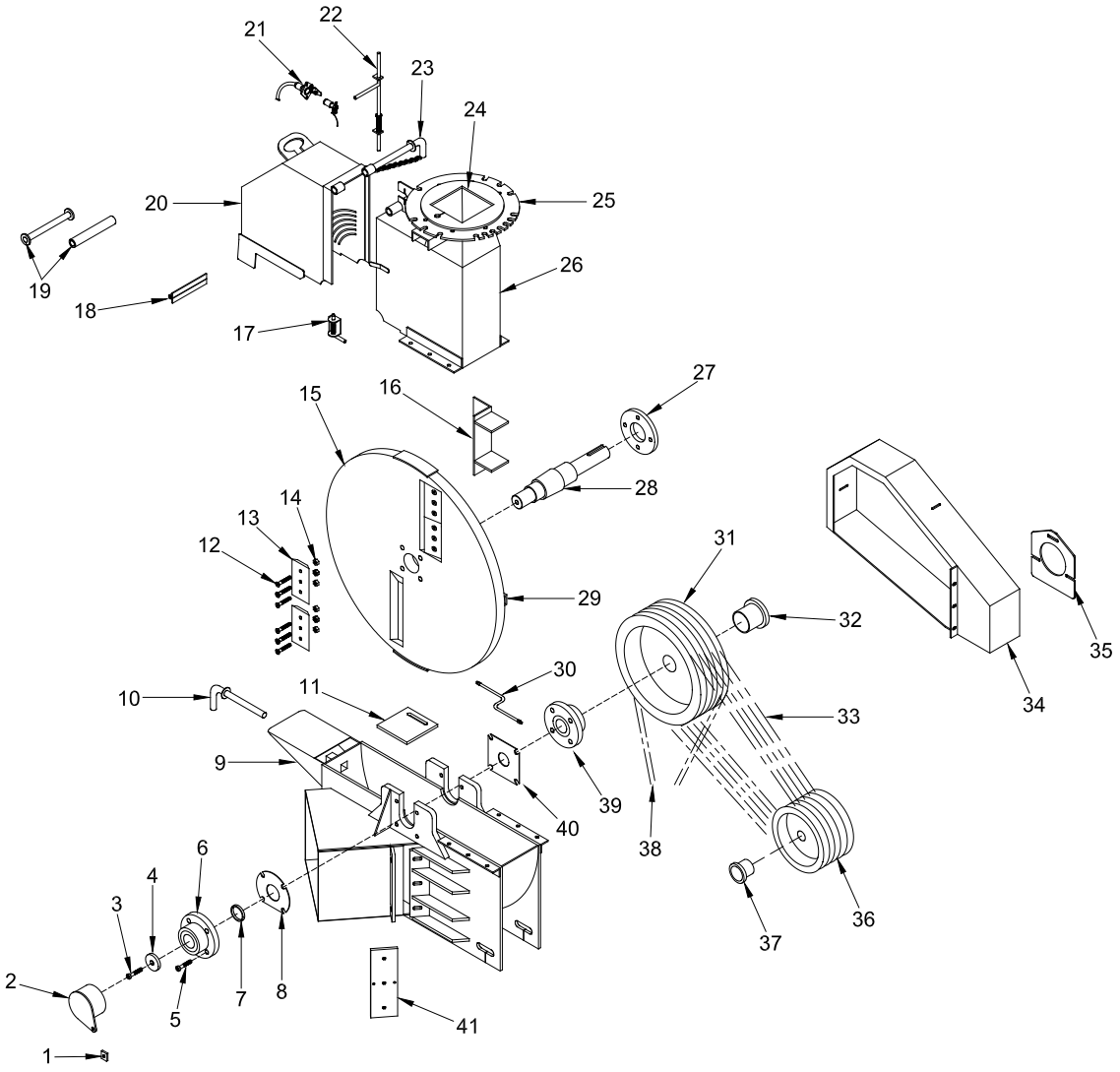

NOTE: Parts may not be exactly as shown.

Copyright 8/07

LOCATION	MODEL 250 PART NUMBER	MODEL 254 PART NUMBER	DESCRIPTION
27 a.	980-0126-63	914-1003-25	Chipper Draw Ring
b.	900-4902-96	900-4907-15	Chipper Draw Ring Bolt (Not Shown)
c.	900-4902-97	900-4907-16	Chipper Draw Ring Nut (Not Shown)
28 a.	980-0110-87	N/A	Chipper Shaft (20 3/4” Long)
b.	914-1014-87	914-1014-87	Chipper Shaft (22” Long)
c.	914-1003-28	914-1003-28	Chipper Shaft (23 1/2” Long)
29.	980-0123-82	980-0123-82	Chipper Disc Lock Tube
30.	900-3900-24	900-3900-24	Rear Chipper Bearing Grease Line
31.	**	**	Chipper Sheave
32.	**	**	Chipper Sheave Bushing
33.	**	**	Chipper Belts
34 a.	981-200019	N/A	Beltshield Ass’y - 4/5 Belt Drive (Model 250, Start 3/06)
b.	981-0500-09	981-0500-09	Beltshield Ass’y - 4/5 Belt Drive (Model 250, Pre 3/06)
c.	N/A	981-1007-06	Beltshield Ass’y - 6 Belt Drive
35 a.	981-300192	N/A	Adjustable Beltshield Cover - Twin Disc Clutch SP211
b.	981-300111	N/A	Adjustable Beltshield Cover - Twin Disc Clutch SP111
c.	981-300193	N/A	Adjustable Beltshield Cover - Auto Clutch
36.	**	**	Engine Sheave
37.	**	**	Engine Sheave Bushing
38.	**	**	Hydraulic Pump Belts (If Applicable)
39 a.	900-1900-34	900-1901-15	Rear Chipper Bearing
b.	900-4903-32	900-4903-32	Rear Chipper Bearing Bolt (Not Shown)
40.	980-0121-65	980-0119-38	Rear Chipper Bearing Baker Plate (Optional)
41.	See Page 105	See Page 105	Anvil

** Components vary with engine and disc options,
order by physical description.

Copyright 8/07

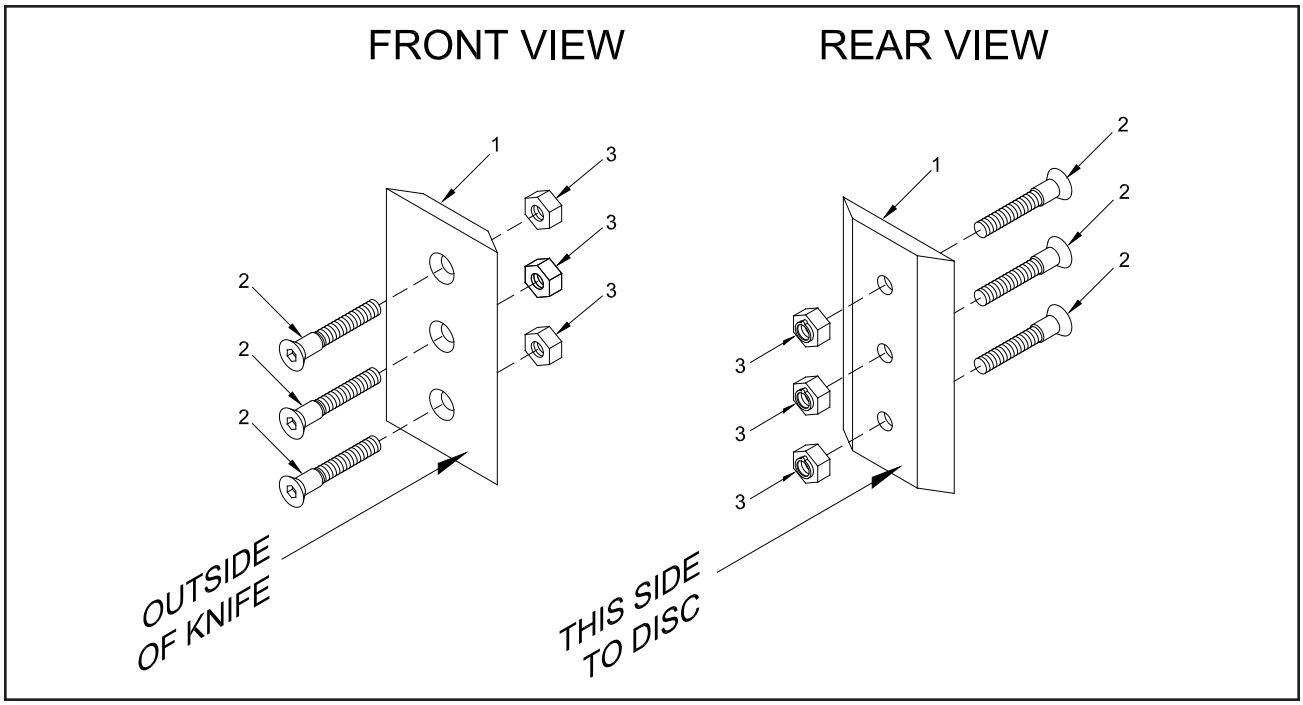

KNIFE BOLTS MUST BE INSTALLED THROUGH KNIFE AND ESPECIALLY KNIFE NUT AS SHOWN

Part Numbers For New Style Knives 1/2" x 4 1/2" (Start 6/00)

LOCATION	PART NUMBER	DESCRIPTION
1.	900-9901-18	1/2" x 4 1/2" x 7 1/4" Chipper Knife (Start 6/00)
2.	900-4903-92	5/8"-11NC x 3" Chipper Knife Bolt (180 Ft-Lbs or 244 Nm of Torque)
3.	900-4903-93	5/8"-11NC Chipper Knife Nut

Part Numbers For Old Style Knives 1/2" x 4" (Pre 6/00)

LOCATION	PART NUMBER	DESCRIPTION
1.	900-9902-00	1/2" x 4" x 7 1/4" Chipper Knife (Pre 6/00)
2.	900-4902-88	1/2"-13NC x 3" Chipper Knife Bolt (70-80 Ft-Lbs or 95-108 Nm of Torque)
3.	900-4900-27	1/2"-13NC Chipper Knife Nut

Part Numbers For Miscellaneous Knife Parts

LOCATION	PART NUMBER	DESCRIPTION
4.	900-9901-68	Knife Saver Kit (Not Shown)
5.	900-9901-65	File For Knife Saver Kit Only (Not Shown)
6.	900-9901-63	Replacement Blades For Knife Saver (Not Shown)

NOTE: Parts may not be exactly as shown.

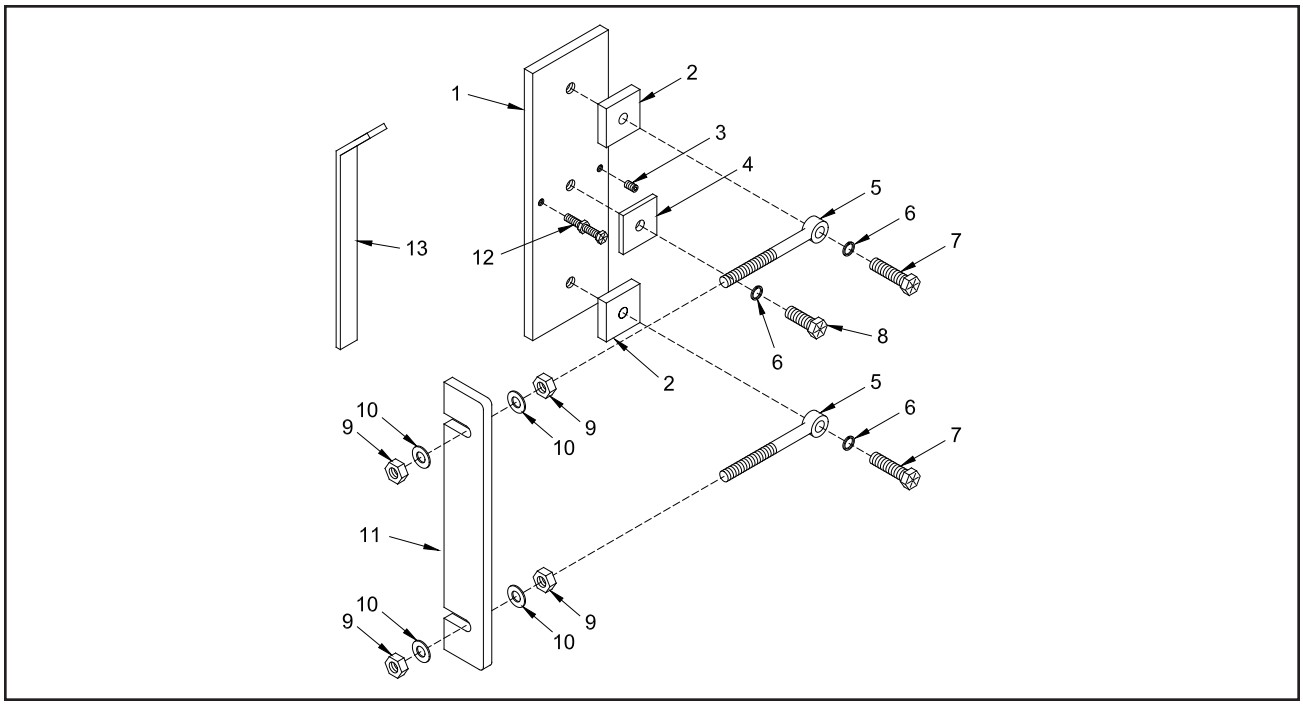

LOCATION		MODEL 250 PART NUMBER	MODEL 254 PART NUMBER	DESCRIPTION
1	a.	981-1005-38	914-1015-03	Anvil Only
	b.	981-1005-82	914-1015-51	“AR” Anvil Only
2.		980-0131-16	980-0131-16	Square Anvil Washer - 1/2”
3	a.	900-4903-54	N/A	5/16” - 18NC x 1/2” Set Screw
	b.	N/A	900-4903-56	5/16” - 18NC x 3/4” Set Screw
4.		914-1002-14	914-1002-14	Square Anvil Washer - 1/4”
5	a.	900-4902-74	N/A	Anvil Eye Bolt - 5/8” - 11NC x 5”
	b.	N/A	900-4905-11	Anvil Eye Bolt - 5/8” - 11NC x 6”
6.		900-4900-33	900-4900-33	3/4” High Collar Lock Washer
7	a.	900-4902-78	N/A	3/4” - 10NC x 2 1/2” Hex Head Bolt
	b.	N/A	900-4907-14	3/4” - 11NC x 3” Hex Head Bolt
8	a.	900-4910-21	N/A	3/4” - 10NC x 1 1/2” Hex Head Bolt
	b.	N/A	900-4907-12	3/4” - 11NC x 2” Hex Head Bolt
9.		900-4907-04	900-4907-04	5/8” - 11NC Hex Nut
10.		900-4907-10	900-4907-10	5/8” Flat Washer
11.		981-1005-37	914-1015-01	Anvil Puller Block
12	a.	900-4906-41	900-4906-41	5/16” - 18NC x 2” Hex Head Bolt
	b.	900-4910-73	900-4910-73	5/16” - 18NC Hex Nut
13.		981-1006-16	914-300131	Anvil Gauge
14.		981-0501-54	914-0503-55	Anvil Hardware Only (Includes 2 Through 10, & 12)
15	a.	981-0501-01	914-0502-60	Anvil and Hardware Kit (Includes 1a Through 10, & 12)
	b.	981-100026	914-0502-69	“AR” Anvil and Hardware Kit (Includes 1b Through 10, & 12)

NOTE: Torque Anvil Bolts to 175 - 180 ft. lbs. (237 - 245 Nm)

NOTE: Parts may not be exactly as shown.

Copyright 8/07

STANDARD DISCHARGE

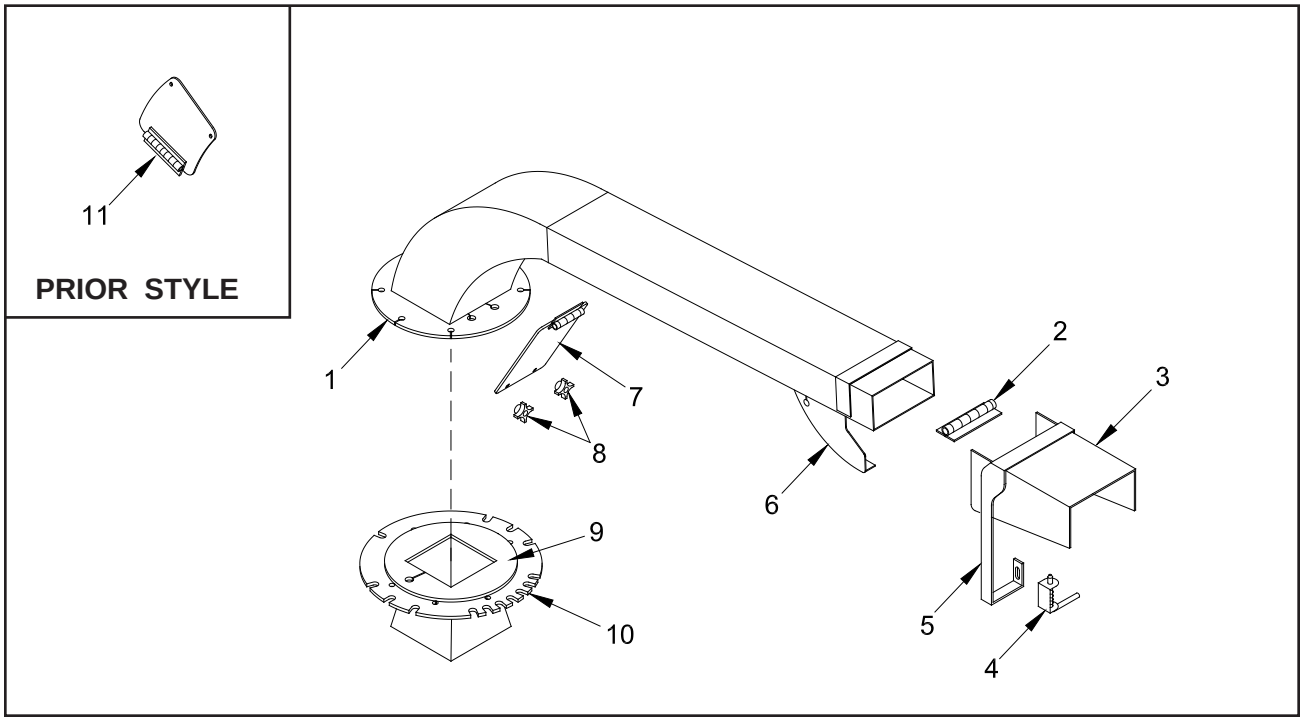

LOCATION	PART NUMBER	DESCRIPTION
1.	980-0127-33	Discharge Bottom Swivel Ring
2.	981-1001-63	Discharge Flipper Hinge
3 a.	980-0509-26	12” Discharge Flipper Assembly
b.	980-0510-25	12” Enclosed Discharge Flipper Assembly
c.	980-0505-90	30” Discharge Flipper Assembly
4.	900-4901-83	Discharge Flipper Adjusting Spring
5.	980-300298	Adjusting Spring Mount
6 a.	980-0510-23	Adjusting Spring Lock Plate Assembly For Standard Flipper
b.	980-0510-24	Adjusting Spring Lock Plate Assembly For Enclosed Flipper
7.	980-300616	Optional Clean Out Door (Optional On All Discharges)
8.	900-4908-29	Plastic Knob For Optional Clean Out Door
9.	980-300424	Bottom Swivel Ring
10 a.	980-300349	Bottom Swivel Flange - Model 250
b.	914-300079	Bottom Swivel Flange - Model 254
11.	980-0509-94	Optional Clean Out Door Assembly (Pre 9/06)
12 a.	900-4911-04	Discharge Transport Bolt - 5/8”-11NC x 1 1/2” (Not Shown)
b.	900-4903-25	Discharge Transport Nut - 5/8”-11NC (Not Shown)

DISCHARGE ASSEMBLIES

LOCATION	MODEL 250 PART NUMBER	MODEL 254 PART NUMBER	DESCRIPTION
1.	981-0501-46	955-0500-59	Standard Discharge Assembly
2.	981-0501-50	955-0502-32	Hand Crank And Adjustable Height Discharge Assembly
3.	981-0501-52	955-0502-33	Hand Crank Discharge Assembly
4.	981-0501-57	955-0502-00	Hydraulic Swivel And Adjustable Height Discharge Assembly
5.	980-0505-24	955-0502-30	Hydraulic Swivel Discharge Assembly
6.	981-0501-42	955-0502-31	Adjustable Height Discharge Assembly

NOTE: Parts may not be exactly as shown.

HAND CRANK SWIVEL DISCHARGE

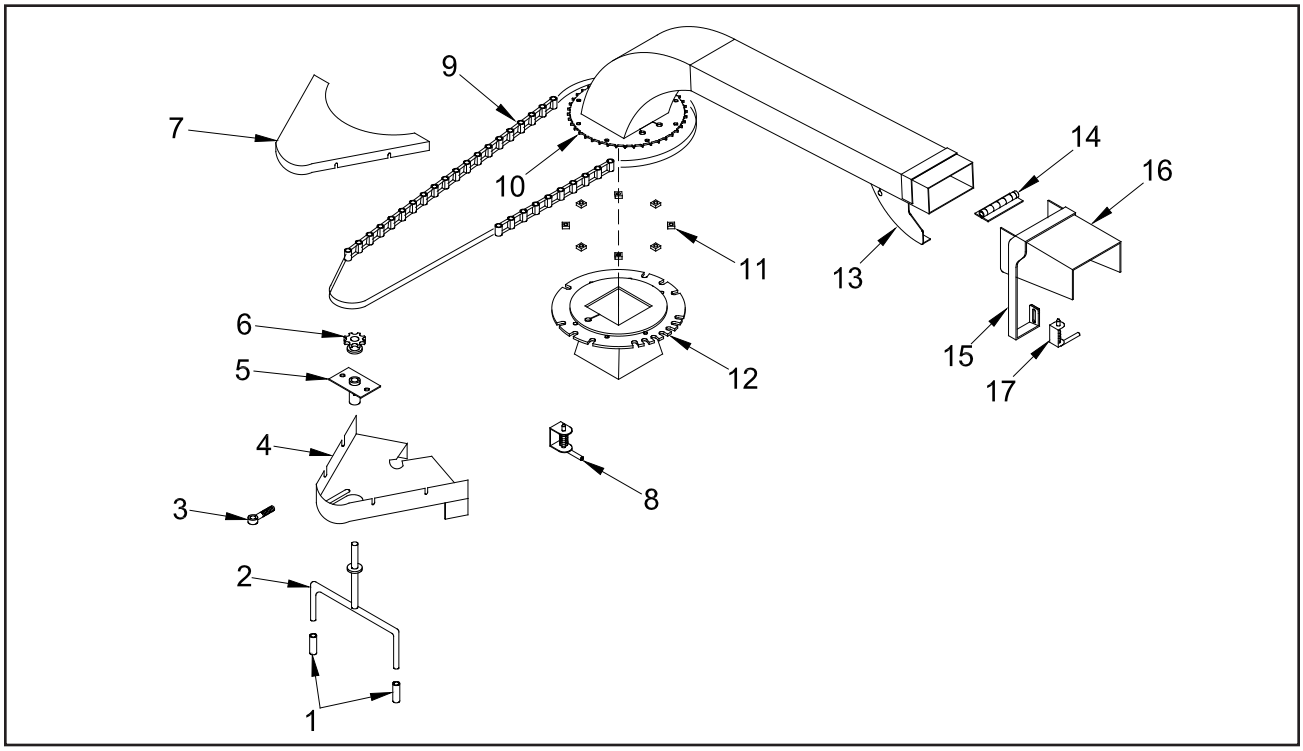

LOCATION	PART NUMBER	DESCRIPTION
1.	900-7900-96	Rubber Cap
2.	980-0509-41	T-Handle Assembly
3.	900-4905-43	Eye Bolt Adjuster For Hand Crank Swivel Discharge
4 a.	980-200113	Bottom Chain Guard - Rounded Style
b.	980-0138-21	Bottom Chain Guard - Square Style
5.	980-200006	Chain Adjuster Assembly
6 a.	900-1905-59	T-Handle Sprocket
b.	980-0125-82	Key For Sprocket (Not Shown)
7 a.	980-200108	Steel Top Chain Guard - Rounded Style
b.	900-9904-64	Plastic Top Chain Guard - Rounded Style
c.	980-0138-22	Steel Top Chain Guard - Square Style
8.	900-4904-90	Spring Plunger
9 a.	980-0128-74	#50 Roller Chain
b.	900-1901-18	Half Link - Chain (Not Shown)
c.	900-1901-19	Master Link - Chain (Not Shown)
10.	980-0127-32	Sprocket For Hand Crank Swivel Discharge (Weld On)
11.	980-0137-35	Spacers Blocks
12.	980-0128-23	Bottom Swivel Ring
13 a.	980-0510-23	Adjusting Spring Lock Plate Assembly For Standard Flipper
b.	980-0510-24	Adjusting Spring Lock Plate Assembly For Enclosed Flipper
14.	981-1001-63	Discharge Flipper Hinge
15.	980-300298	Adjusting Spring Mount
16 a.	980-0509-26	12” Discharge Flipper Assembly
b.	980-0510-25	12” Enclosed Discharge Flipper Assembly
c.	980-0505-90	30” Discharge Flipper Assembly
17.	900-4901-83	Discharge Flipper Adjusting Spring
18 a.	900-4911-04	Discharge Transport Bolt - 5/8”-11NC x 1 1/2” (Not Shown)
b.	900-4903-25	Discharge Transport Nut - 5/8”-11NC (Not Shown)

NOTE: Parts may not be exactly as shown.

Copyright 8/07

HYDRAULIC SWIVEL DISCHARGE

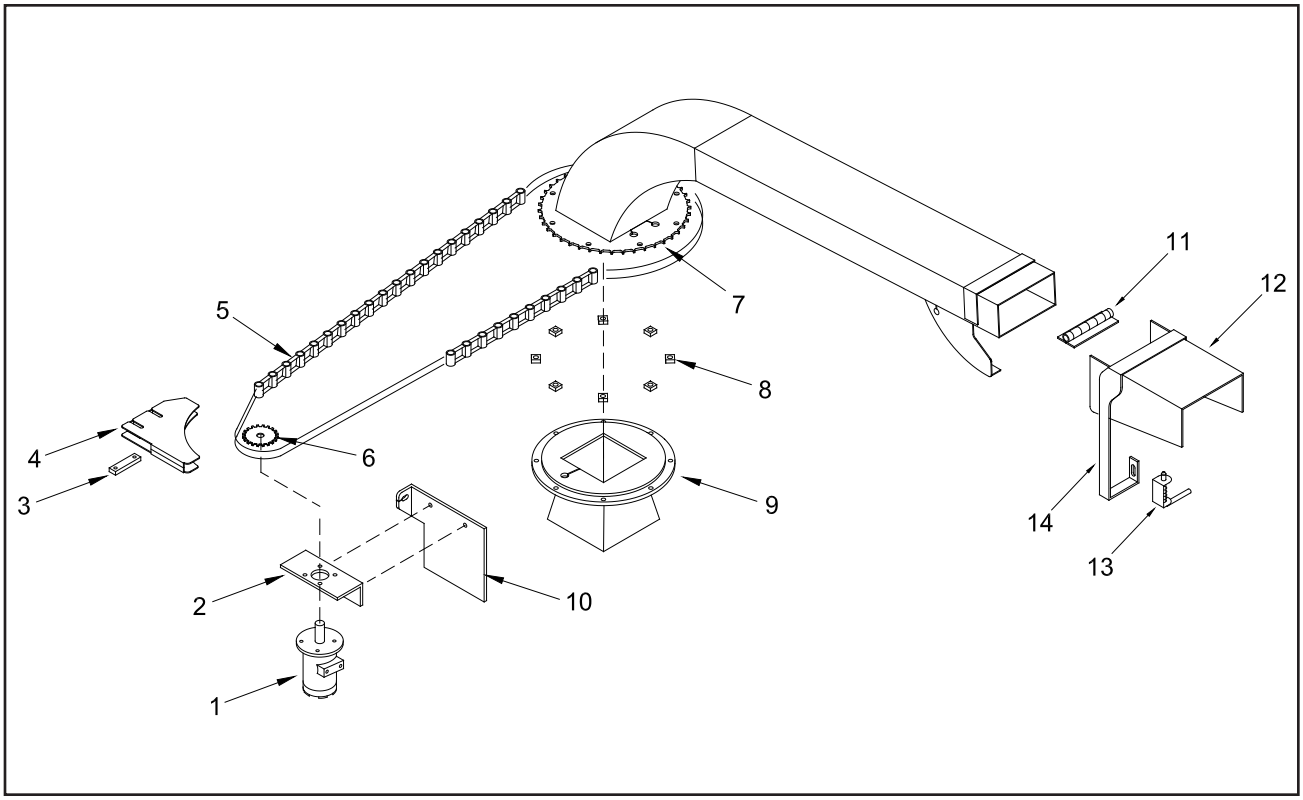

LOCATION	PART NUMBER	DESCRIPTION
1 a.	900-3921-57	Discharge Swivel Hydraulic Motor - SAE O-ring
b.	900-3902-14	Discharge Swivel Hydraulic Motor - Pipe Fitting
2.	980-0110-66	Hydraulic Swivel Mount
3.	980-0126-04	Chain Guard Mount
4.	980-200086	Hydraulic Swivel Chain Guard
5 a.	900-1901-20	#50 Roller Chain
b.	900-1901-18	Half Link- Chain (Not Shown)
c.	900-1901-19	Master Link - Chain (Not Shown)
6.	900-1901-21	Sprocket For Hydraulic Motor
7.	980-0110-63	Sprocket For Discharge (Weld On)
8.	900-4905-00	Spacer Washer
9.	980-0122-18	Bottom Swivel Ring
10.	914-1006-17	Hydraulic Swivel Motor Mount
11.	981-1001-63	Discharge Flipper Hinge
12 a.	980-0509-26	12” Discharge Flipper Assembly
b.	980-0510-25	12” Enclosed Discharge Flipper Assembly
c.	980-0505-90	30” Discharge Flipper Assembly
13.	900-4901-83	Discharge Flipper Adjusting Spring
14.	980-300298	Adjusting Spring Mount
15 a.	900-4911-04	Discharge Transport Bolt - 5/8”-11NC x 1 1/2” (Not Shown)
b.	900-4903-25	Discharge Transport Nut - 5/8”-11NC (Not Shown)

NOTE: Parts may not be exactly as shown.

Copyright 8/07

DISCHARGE WITH HYDRAULIC FLIPPER

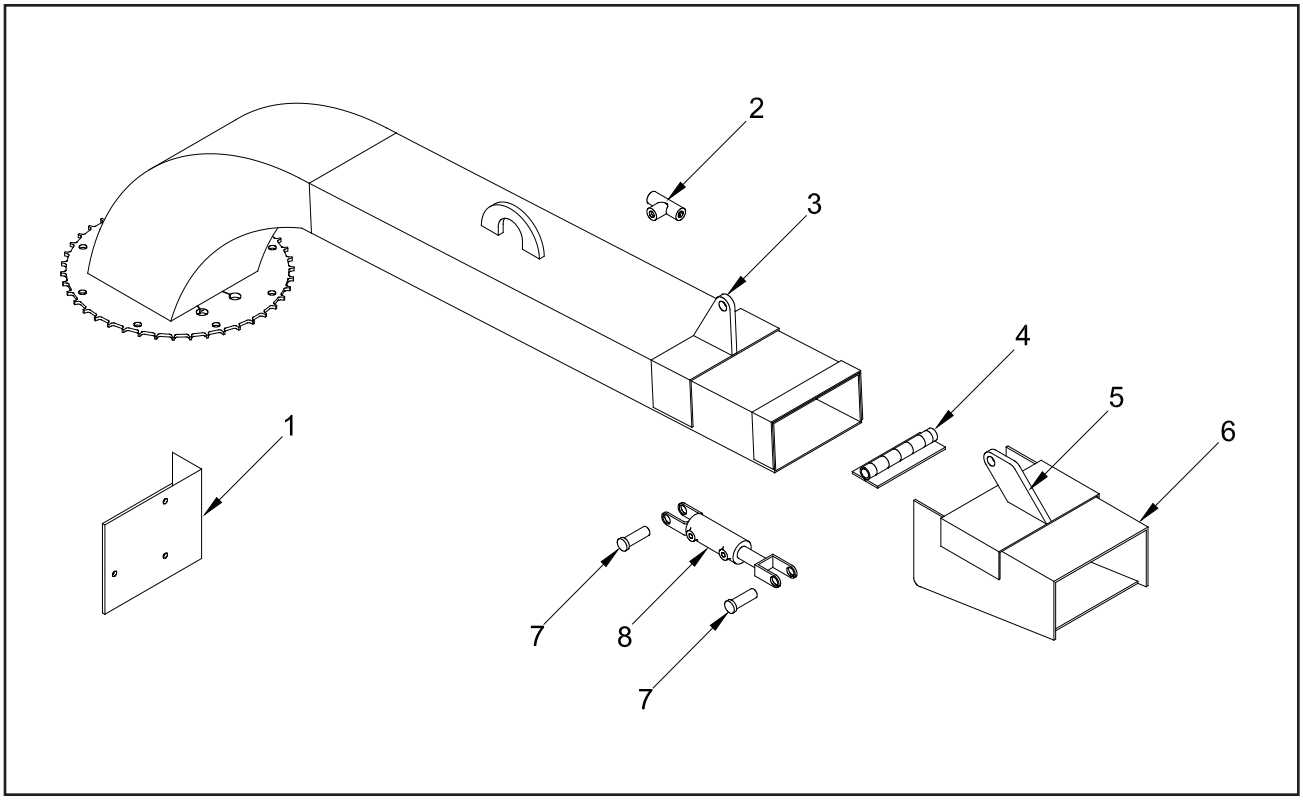

LOCATION	PART NUMBER	DESCRIPTION
1.	980-0128-78	Hydraulic Flipper Control Valve Mount Plate
2.	900-3925-18	Check Valve
3.	960-0006-42	Straight Section Cylinder Lug
4.	981-1001-63	Hydraulic Flipper Hinge
5.	980-0126-48	Flipper Lug
6.	980-0510-02	Hydraulic Flipper Assembly (Enclosed)
7.	900-3930-71	Cylinder Lug Pin - 3/4” Dia. x 2 1/2” & Cotter Pin - 1/4” x 1 1/2”
8.	900-3928-16	Hydraulic Flipper Cylinder
9.	900-3916-62	Swivel Discharge & Discharge Flipper Control Valve (Not Shown)
10 a.	900-4911-04	Discharge Transport Bolt - 5/8”-11NC x 1 1/2” (Not Shown)
b.	900-4903-25	Discharge Transport Nut - 5/8”-11NC (Not Shown)

NOTE: Parts may not be exactly as shown.

Copyright 8/07

HAND CRANK ADJ. HEIGHT DISCHARGE

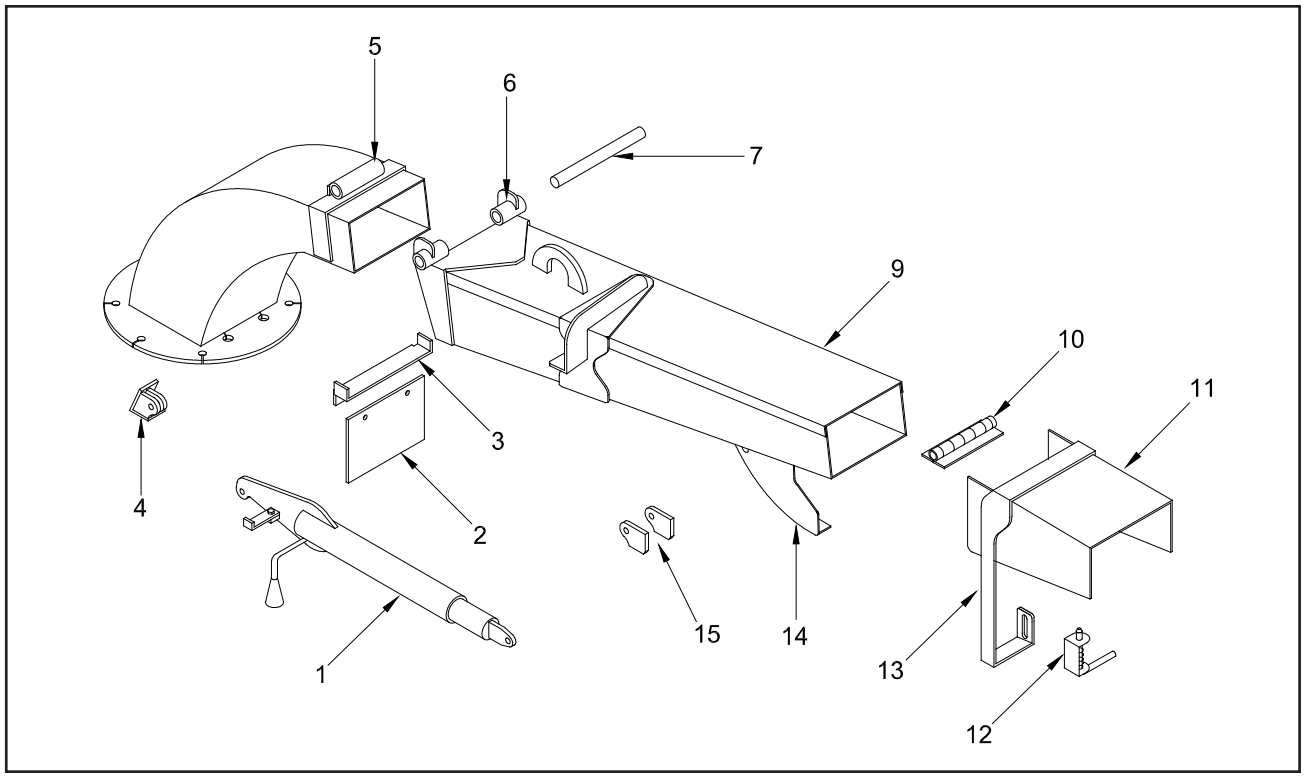

LOCATION	PART NUMBER	DESCRIPTION
1 a.	980-0510-86	Hand Crank For Adj. Height Discharge - Mounted On The Side
b.	980-0508-51	Hand Crank For Adj. Height Discharge - Mounted Underneath
2.	980-0126-12	Rubber Discharge Guard
3.	937-300318	Rubber Discharge Guard Mount
4.	980-300032	Hand Crank Adj. Height Mount Brackets
5.	980-300210	Hand Crank Adj. Height Hinge Large Hinge Tube
6.	980-300211	Hand Crank Adj. Height Small Hinge Tube
7.	980-300209	Hand Crank Adj. Height Hinge Pin
8 a.	980-200091	Hand Crank Adj. Height Hinge Assembly - Model 250 (Includes #'s 5 - 7)
b.	937-200130	Hand Crank Adj. Height Hinge Assembly - Model 254 (Includes #'s 5 - 7)
9 a.	981-200090	Straight Section Hand Crank Adj. Height Discharge - Model 250
b.	955-0502-34	Straight Section Hand Crank Adj. Height Discharge - Model 254
10.	981-1001-63	Discharge Flipper Hinge
11 a.	980-0509-26	12" Discharge Flipper Assembly
b.	980-0510-25	12" Enclosed Discharge Flipper Assembly
c.	980-0505-90	30" Discharge Flipper Assembly
12.	900-4901-83	Discharge Flipper Adjusting Spring
13.	980-300298	Adjusting Spring Mount
14 a.	980-0510-23	Adjusting Spring Lock Plate For Standard Flipper
b.	980-0510-24	Adjusting Spring Lock Plate For Enclosed Flipper
15.	980-300032	Hand Crank Adj. Height Mount Brackets
16 a.	900-4911-04	Discharge Transport Bolt - 5/8"-11NC x 1 1/2" (Not Shown)
b.	900-4903-25	Discharge Transport Nut - 5/8"-11NC (Not Shown)

NOTE: Parts may not be exactly as shown.

Copyright 8/07

MODEL 250 TELESCOPIC DISCHARGE

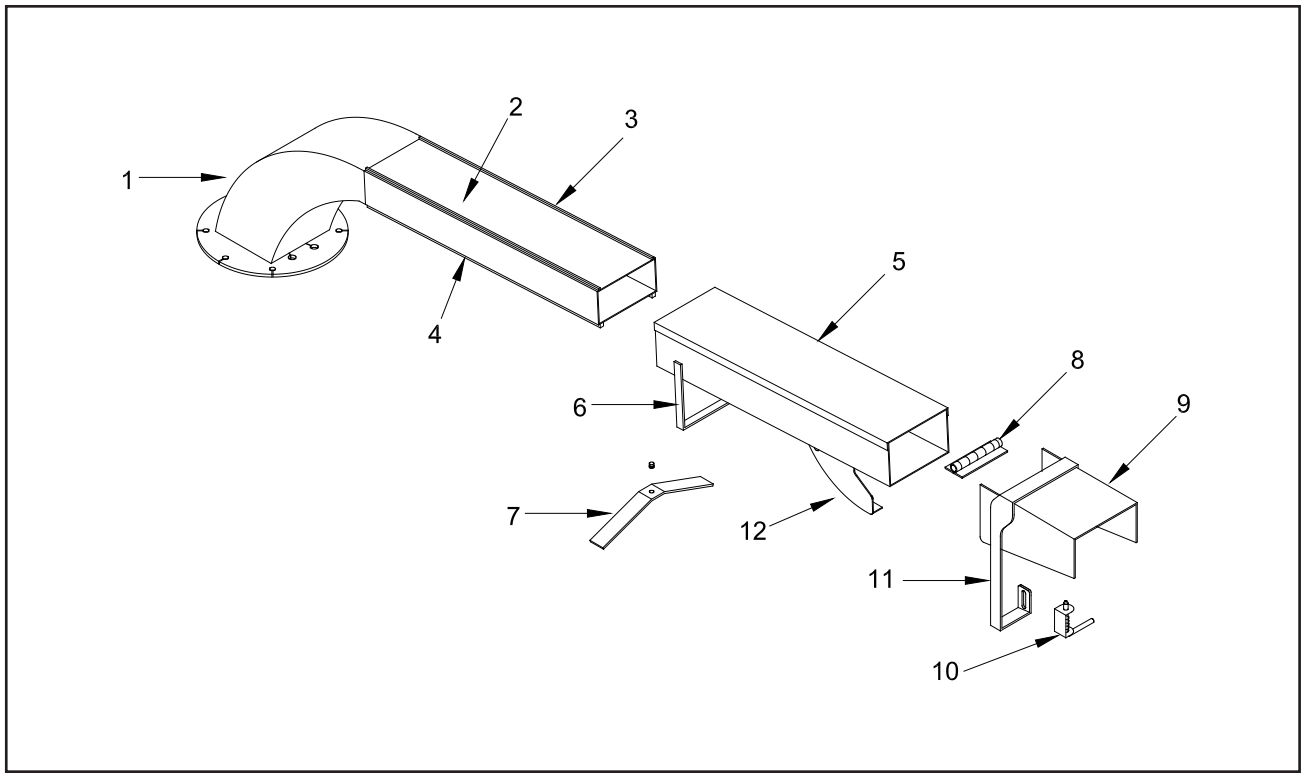

LOCATION	PART NUMBER	DESCRIPTION
1.	980-0510-03	Telescopic Discharge Assembly
2.	980-0510-26	Telescopic Discharge Straight Section Assembly
3.	980-0120-11	Telescopic Discharge Top Wear Slide
4.	980-0120-12	Telescopic Discharge Bottom Wear Slide
5.	980-0510-27	Telescopic Discharge Slide Section
6.	980-0120-09	Telescopic Discharge Slide Arm
7.	980-0505-68	Telescopic Discharge Lock Handle
8.	981-1001-63	Discharge Flipper Hinge
9 a.	980-0509-26	12” Discharge Flipper Assembly
b.	980-0510-25	12” Enclosed Discharge Flipper Assembly
c.	980-0505-90	30” Discharge Flipper Assembly
10.	900-4901-83	Discharge Flipper Adjusting Spring
11.	980-300298	Adjusting Spring Mount
12 a.	980-0510-23	Adjusting Spring Lock Plate For Standard Flipper
b.	980-0510-24	Adjusting Spring Lock Plate For Enclosed Flipper
13 a.	900-4911-04	Discharge Transport Bolt - 5/8”-11NC x 1 1/2” (Not Shown)
b.	900-4903-25	Discharge Transport Nut - 5/8”-11NC (Not Shown)

NOTE: Parts may not be exactly as shown.

Copyright 8/07

TYPICAL MODELS 250/254 HYDRAULIC SCHEMATIC (With No Options)

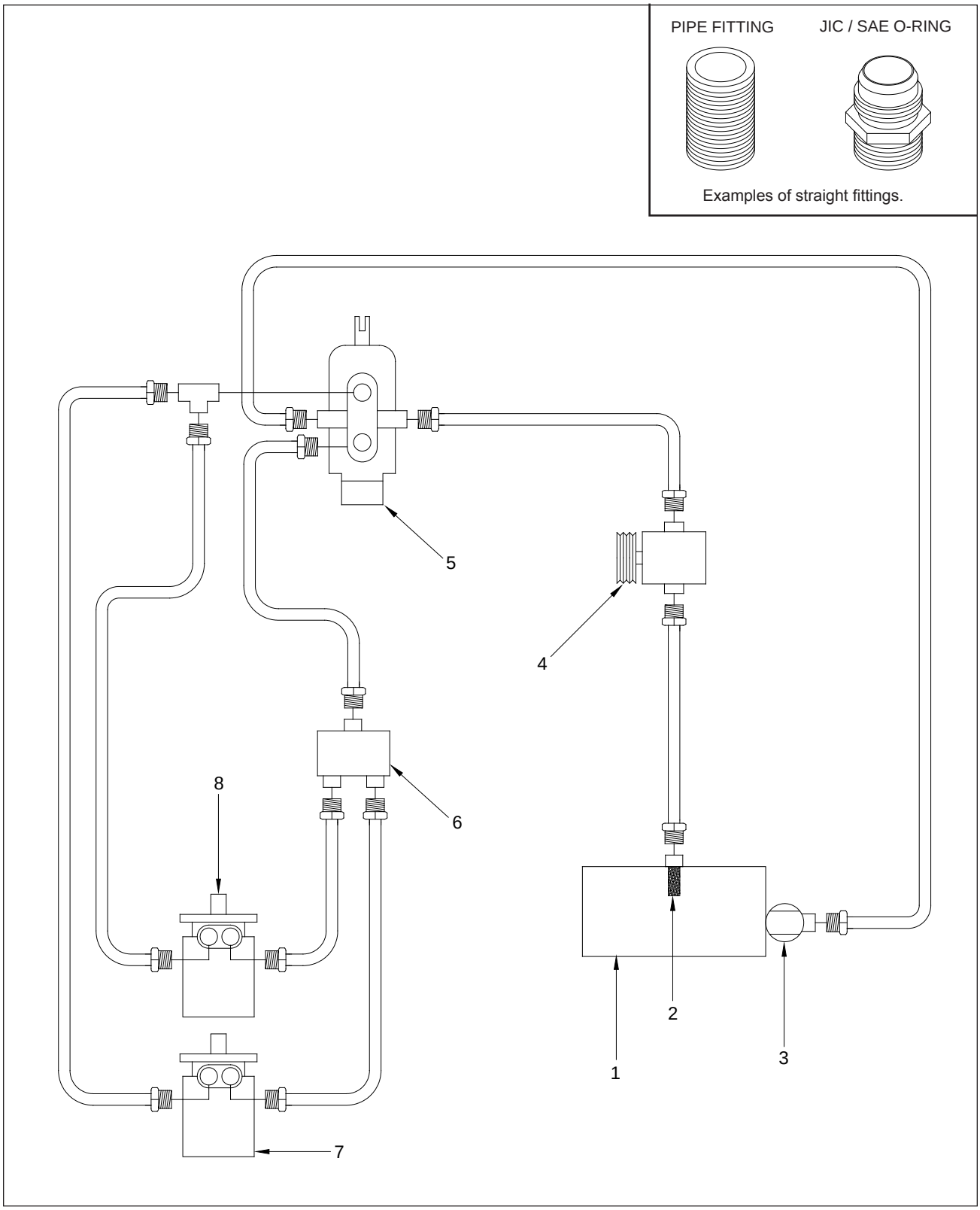

NOTE: Parts may not be exactly as shown.

TYPICAL MODELS 250/254 HYDRAULIC SCHEMATIC (With No Options)

LOCATION	PIPE FITTING	SAE O-RING	DESCRIPTION
1.	See Pages 128-129	See Pages 128-129	Hydraulic Tank
2.	900-3903-39	900-3903-39	Hydraulic Tank Strainer
3 a.	900-3900-09	900-3900-09	Filter Head
b.	900-3900-10	900-3900-10	Filter Cartridge
4.	**	**	Hydraulic Pump
5.	900-3909-89	900-3920-06A	Feedwheel Control Valve With Relief
6.	See Pages 118-119	See Pages 118-119	Flow Divider
7.	900-3908-67	900-3908-67	Bottom Feedwheel Hydraulic Motor
8.	900-3908-68	900-3908-68	Top Feedwheel Hydraulic Motor

NOTE: Make sure to order components according to fitting type, fittings may vary on all components.
**** Hydraulic components, fittings, hoses will very depending on optional equipment. Order by physical description.**
**** Hydraulic pumps need to be ordered by physical description and serial number of machine.**

Copyright 8/07

TYPICAL MODELS 250/254 HYDRAULIC SCHEMATIC (With Options)

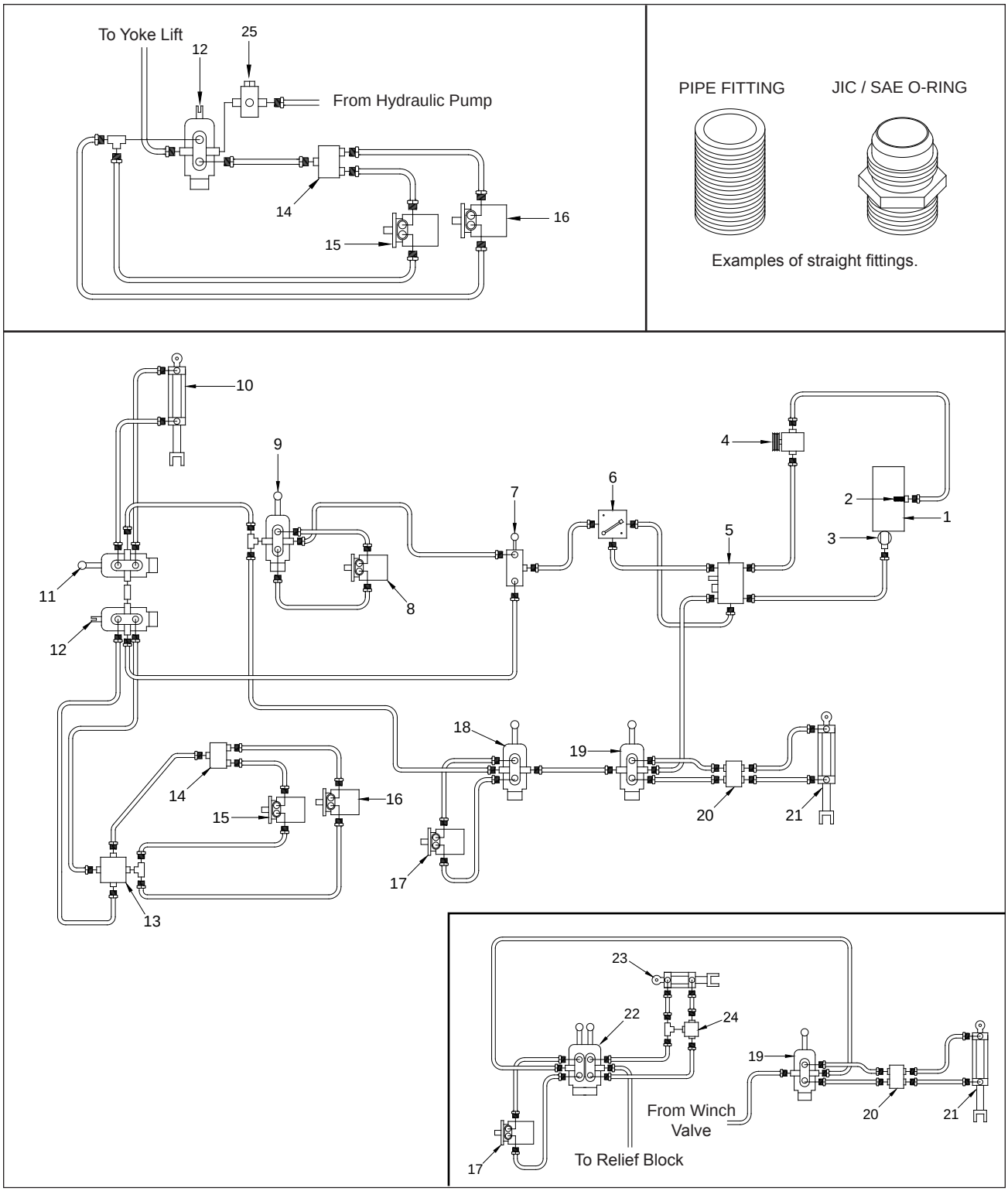

NOTE: Parts may not be exactly as shown.

TYPICAL MODELS 250/254 HYDRAULIC SCHEMATIC (With Options)

LOCATION	PIPE FITTING	SAE O-RING	DESCRIPTION
1.	See Pages 128-129	See Pages 128-129	Hydraulic Tank
2.	900-3903-39	900-3903-39	Hydraulic Tank Strainer
3 a.	900-3900-09	900-3900-09	Filter Head
b.	900-3900-10	900-3900-10	Filter Cartridge
4.	**	**	Hydraulic Pump
5.	See Pages 116-117	See Pages 116-117	Relief Block With Autofeed Option
6.	900-3901-99	900-3924-55	Variable Speed Control Valve
7.	900-3913-41	900-3920-58	Winch Selector Control Valve
8.	900-3902-14	900-3921-57	Winch Hydraulic Motor
9.	900-3901-42	900-3920-01	Winch Control Valve
10 a.	900-3925-04	900-3925-04	Yoke Lift Cylinder - Welded - Model 250
b.	900-3903-49	900-3903-49	Yoke Lift Cylinder - Tie Rod - Model 250
c.	900-3925-05	900-3925-05	Yoke Lift Cylinder - Welded - Model 254 (Start 3/02)
d.	900-3903-00	900-3903-00	Yoke Lift Cylinder - Tie Rod - Model 254 (Start 3/02)
e.	900-3925-06	900-3925-06	Yoke Lift Cylinder - Welded - Model 254 (Pre 3/02)
f.	900-3908-16	900-3908-16	Yoke Lift Cylinder - Tie Rod - Model 254 (Pre 3/02)
g.	904-0007-14	904-0007-14	Pin For Welded Cylinder (Not Shown)
h.	904-0006-90	904-0006-90	Seal Kit - Welded Cylinder
i.	900-3905-37	900-3905-37	Seal Kit - Tie Rod Cylinder
11 a.	N/A	900-3927-73	Yoke Lift Control Valve For Dual Control Yoke Lift
b.	900-3908-62	900-3920-09	Yoke Lift Control Valve With Winch Option
c.	900-3901-24	900-3920-02	Yoke Lift Control Valve Without Winch Option
12.	900-3914-47	900-3920-05A	Feedwheel Control Valve Without Relief
13.	See Pages 116-117	See Pages 116-117	Reversing “Autofeed Plus”
14.	See Pages 118-119	See Pages 118-119	Flow Divider
15.	900-3908-68	900-3908-68	Top Feedwheel Hydraulic Motor
16.	900-3908-67	900-3908-67	Bottom Feedwheel Hydraulic Motor
17.	900-3902-14	900-3921-57	Swivel Discharge Hydraulic Motor
18.	900-3901-42	900-3920-01	Swivel Discharge Control Valve Only
19.	900-3901-42	900-3920-01	Tongue Jack Control Valve
20.	N/A	900-3925-94	Tongue Jack Check Valve
21 a.	900-3934-24	900-3934-24	Tongue Jack Cylinder - Welded
b.	900-3912-12	900-3912-12	Tongue Jack Cylinder - Tie Rod
22.	900-3916-62	900-3916-62	Swivel Discharge & Discharge Flipper Control Valve
23.	900-3928-16	N/A	Discharge Flipper Cylinder
24.	900-3925-18	N/A	Flipper Check Valve
25.	900-3907-31	900-3907-31	Relief Block - Machines With Yoke Lift & Without Autofeed
26.	900-3901-42	900-3920-01	Articulating Tongue Control Valve (Not Shown)
27.	900-3902-27	N/A	Articulating Tongue Cylinder (Not Shown)
28.	900-3901-42	900-3920-01	Log Splitter Control Valve (Not Shown)
29 a.	N/A	900-3937-88	Log Splitter Cylinder (Start 3/07) (Not Shown)
b.	900-3907-52	N/A	Log Splitter Cylinder (Pre 3/07) (Not Shown)
30.	900-3935-13	900-3935-13	In-Line Pressure Check Kit (Not Shown)

NOTE: Make sure to order components according to fitting type, fittings may vary on all components.
**** Hydraulic components, fittings, hoses will very depending on optional equipment. Order by physical description.**
**** Hydraulic pumps need to be ordered by physical description and serial number of machine.**

Copyright 8/07

RELIEF BLOCK

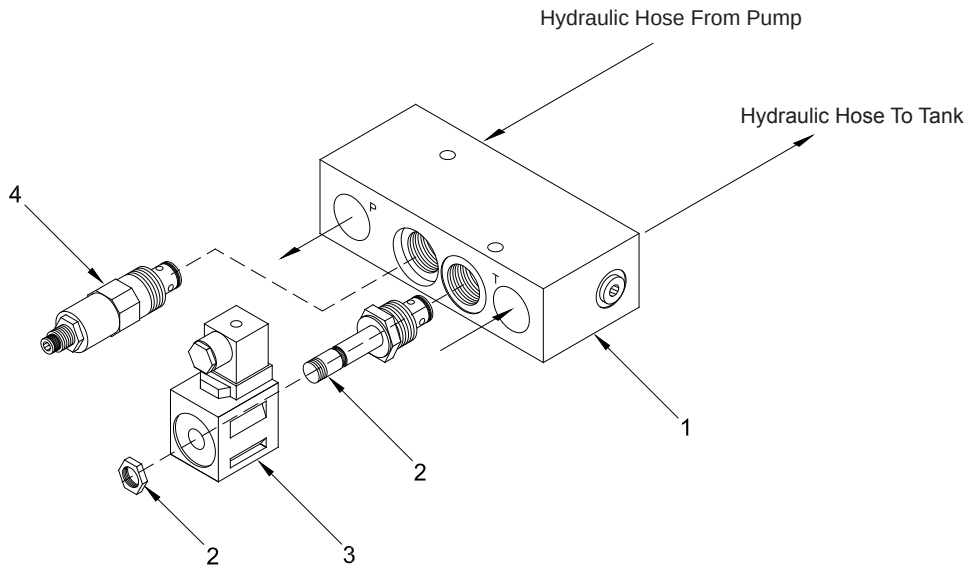

Torque Autofeed Cartridge Nut to a Maximum of 4 to 6 ft.-lbs. (5 to 8 Nm) and Install Loc-Tite 241.
Over Torque Will Cause Damage and Will Also Void Warranty.

"AUTO FEED PLUS" SYSTEM (SINGLE SOLENOID)

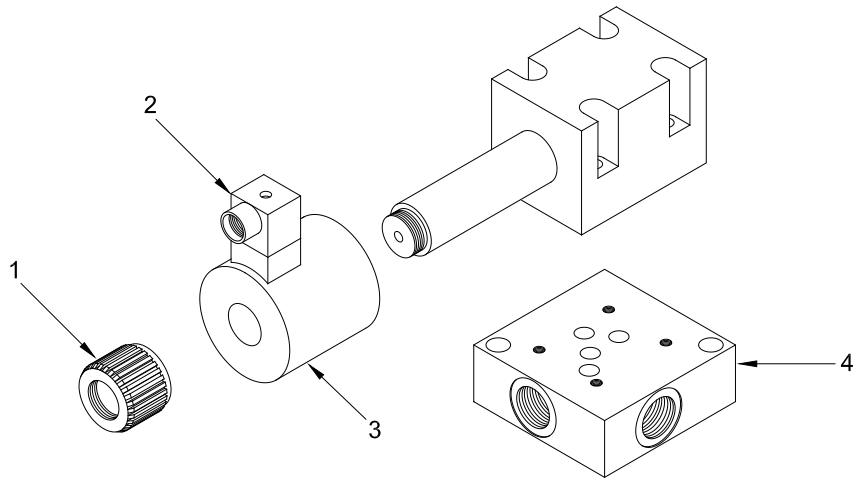

Torque Retainer Nut to a Maximum of 4 to 6 ft.-lbs. (5 to 8 Nm) and Install Vibra Tite.
Over Torque Will Cause Damage and Will Also Void Warranty.

NOTE: Parts may not be exactly as shown.

RELIEF BLOCK

LOCATION	PIPE FITTING	SAE O-RING	DESCRIPTION
1.	900-2900-82	N/A	Autofeed Block Only
2.	900-3923-47	900-3923-47	Autofeed Cartridge Only
3.	900-3923-44	900-3923-44	12 V Autofeed Solenoid Only
4 a.	900-3908-23	900-3908-23	Main Relief Only (Vickers)
b.	900-3919-96	900-3919-96	Main Relief Only (Danfoss)
5 a.	900-3910-68	900-3923-46	Autofeed Block Assembly With Relief
b.	900-3910-69	900-3923-46	Autofeed Block Assembly Without Lift Cylinder
c.	900-3909-05	900-3923-48	Main Relief Block Ass'y (Used Without Autofeed)

"AUTO FEED PLUS" SYSTEM (SINGLE SOLENOID)

LOCATION	PART NUMBER	DESCRIPTION
1 a.	900-3915-19	Retainer Nut (Northman)
b.	900-3920-20	Retainer Nut and Sealing Ring (Danfoss)
2.	900-2909-55	Herschman Connector Only
3 a.	900-3915-20	Solenoid Only (Northman)
b.	900-3920-19	Solenoid Only (Danfoss)
4 a.	900-3918-43	Autofeed Plus Relief Block Subplate (DTS)
b.	900-3923-34	Autofeed Plus Relief Block Subplate (Edmore)
5 a.	900-3918-39	Solenoid Assembly (Northman Includes #'s 1,2,3, & 6)
b.	900-3919-73	Solenoid Assembly (Danfoss Includes #'s 1,2,3, & 6)
6.	900-3915-39	Seal Kit (Not Shown)
7 a.	900-3925-89	10' Cord and Molded Herschman Connector (Not Shown)
b.	900-3920-71	16' Cord and Molded Herschman Connector (Not Shown)
c.	900-3918-63	25' Cord and Molded Herschman Connector (Not Shown)

HOSE CLAMP

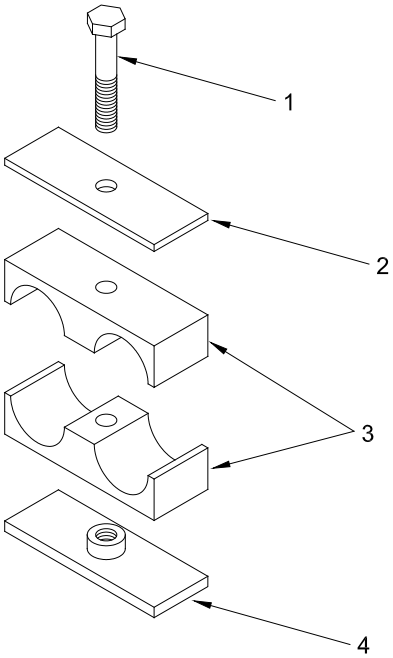

HOSE GUARD

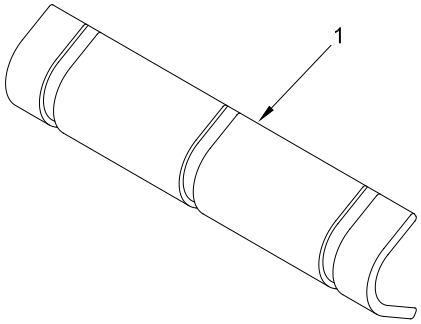

FLOW DIVIDER

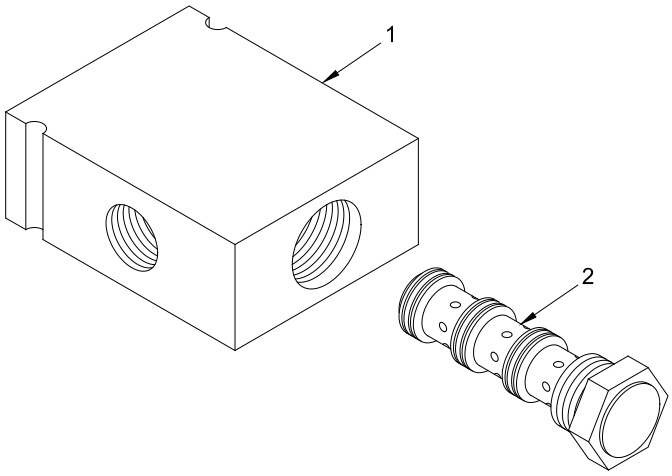

NOTE: Parts may not be exactly as shown.

Copyright 8/07

HOSE CLAMP

LOCATION	PART NUMBER	DESCRIPTION
1.	N/A	Bolt
2.	N/A	Locking Plate
3.	N/A	Plastic Clamp
4 a.	900-3914-09	Weld Plate for 1/4” Double Clamp
b.	900-3914-08	Weld Plate for 1/2” Double Clamp
c.	900-3926-47	Weld Plate for 3/4” Double Clamp
5 a.	900-3917-25	1/4” Double Clamp Assembly (Includes #’s 1-4)
b.	900-3926-44	3/8” Double Clamp Assembly (Includes #’s 1-4)
c.	900-3928-19	1/2” Single Clamp Assembly (Includes #’s 1-4)
d.	900-3914-02	1/2” Single Clamp Assembly For Steel Lines (Includes #’s 1-4)
e.	900-3915-61	1/2” Double Clamp Assembly (Includes #’s 1-4)
f.	900-3913-32	1/2” Double Clamp Assembly For Steel Lines (Includes #’s 1-4)
g.	900-3914-03	3/4” Single Clamp Assembly (Includes #’s 1-4)
h.	900-3914-07	3/4” Double Clamp Assembly (Includes #’s 1-4)
i.	900-3914-04	1” Single Clamp Assembly (Includes #’s 1-4)
j.	900-3914-05	1 1/4” Single Clamp Assembly (Includes #’s 1-4)
k.	900-3914-06	1 1/2” Single Clamp Assembly (Includes #’s 1-4)
6 a.	900-3914-10	Stacking Bolt for 1/2” Double Clamp (Not Shown)
b.	900-3920-11	Stacking Bolt for 3/4” Double Clamp (Not Shown)

HOSE GUARD

LOCATION	PART NUMBER	DESCRIPTION
1 a.	900-3934-76	Hose Guard - 4” Long
b.	900-3934-77	Hose Guard - 6” Long
c.	900-3934-78	Hose Guard - 8” Long

FLOW DIVIDER

LOCATION	PART NUMBER	DESCRIPTION
1 a.	900-3924-59	Flow Divider Body With Cartridge - Sauer/Danfoss #66 (Start 5/03)
b.	900-3919-21	Flow Divider Body With Cartridge - Vickers #66 (Start 5/03)
c.	900-3901-40	Flow Divider Body With Cartridge - Vickers #44 (Pre 5/03)
2 a.	900-3934-30	Cartridge Only - Sauer/Danfoss #66 (Start 5/03)
b.	900-3917-20	Cartridge Only - Vickers #66 (Start 5/03)
c.	900-3907-18	Cartridge Only - Vickers #44 (Pre 5/03)

TYPICAL SPRING LOADED CONTROL VALVE

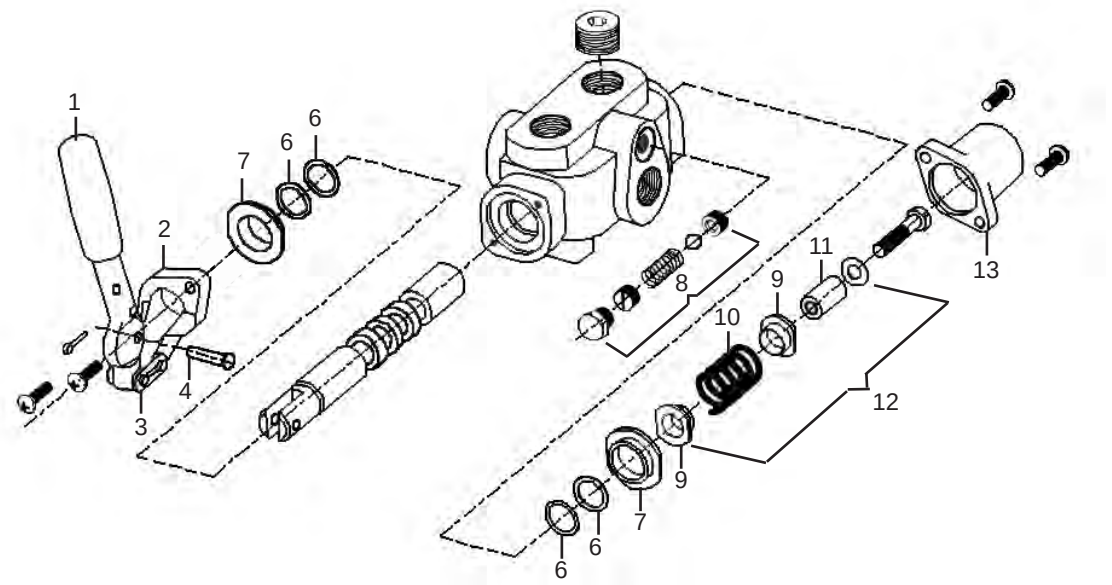

TYPICAL FEEDWHEEL CONTROL VALVES

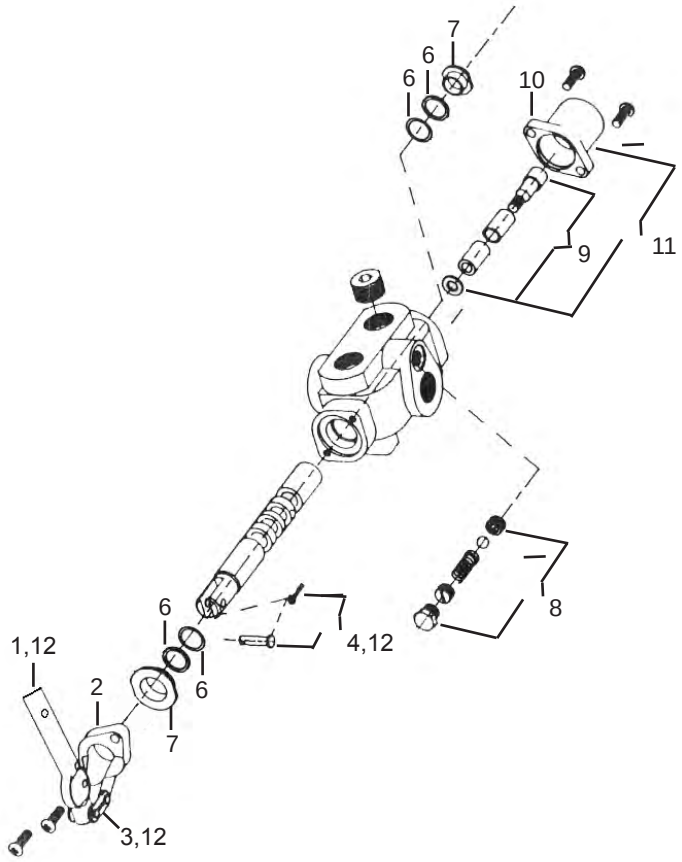

NOTE: Parts may not be exactly as shown.

TYPICAL SPRING LOADED CONTROL VALVE COMPONENTS

LOCATION	PART NUMBER	DESCRIPTION
1.	904-0003-29	Handle Only (Long)
2.	900-3905-95	Valve Bracket Only With Screws
3.	904-0003-30	Master Link Only Control Valve
4.	904-0003-31	Pin And Cotter Key For Control Valve
5.	904-0003-32	Bracket, Handle And Chain Link
	NOTE: INCLUDES #'s 1, 2, 3, 4	
6.	900-3937-34	Seal Kit For Control Valve
7.	904-0003-33	Seal Retainer For Control Valve
	NOTE: NOT INCLUDED IN SEAL KIT	
8.	900-3901-12	Relief Valve Kit - Spring, Ball, Screw
	NOTE: SOLD ONLY AS A KIT	
9.	904-0003-34	Valve Spool Stop For Spring Loaded Valve
10.	904-0003-35	Valve Spool Spring
11.	904-0003-36	Valve Spacer For Yoke Lift Valve
12.	900-A-2941	Spring Center Kit For Spring Loaded Valve
13.	904-0003-37	Detent Cap Only For Spring Loaded Valve (Short)

TYPICAL FEEDWHEEL CONTROL VALVE COMPONENTS

LOCATION	PART NUMBER	DESCRIPTION
1.	900-3905-95H	Handle Only (Short)
2.	900-3905-95	Valve Bracket Only With Screws
3.	904-0003-30	Master Link Only Control Valve
4.	904-0003-31	Pin And Cotter Key For Control Valve
5.	904-0003-32	Bracket, Handle And Chain Link
	NOTE: INCLUDES #'s 1, 2, 3, 4	
6.	900-3937-34	Seal Kit For Control Valve
7.	904-0003-33	Seal Retainer For Control Valve
	NOTE: NOT INCLUDED IN SEAL KIT	
8.	900-3901-12	Relief Valve Kit - Spring, Ball, Screw
	NOTE: SOLD ONLY AS A KIT	
9.	900-3900-71	Detent Kit For Feedwheel Control Valve
	NOTE: SOLD ONLY AS A KIT	
10.	900-390071C	Detent Cap Only With Screws (Long)
11.	900-3900-71E	Detent Kit With Cap And Screws
	NOTE: INCLUDES #'s 9 & 10	
12.	900-3905-59	Handle, Pin, and Link
	NOTE: INCLUDES #'s 1, 3, & 4	

CONTROL VALVES

LOCATION	PIPE FITTING	SAE O-RING	DESCRIPTION
1.	N/A	900-3927-73	Yoke Lift Control Valve for Dual Control Yoke Lift
2.	900-3901-24	900-3920-02	Yoke Lift Control Valve Without Winch Option
3.	900-3908-62	900-3920-09	Yoke Lift Control Valve With Winch Option
4.	900-3901-42	900-3920-01	Winch, Hyd. Swivel Discharge, and Articulating Tongue
5.	900-3909-89	900-3920-06A	Feedwheel Control Valve With Relief
6.	900-3914-47	900-3920-05A	Feedwheel Control Valve With Out Relief

Copyright 8/07

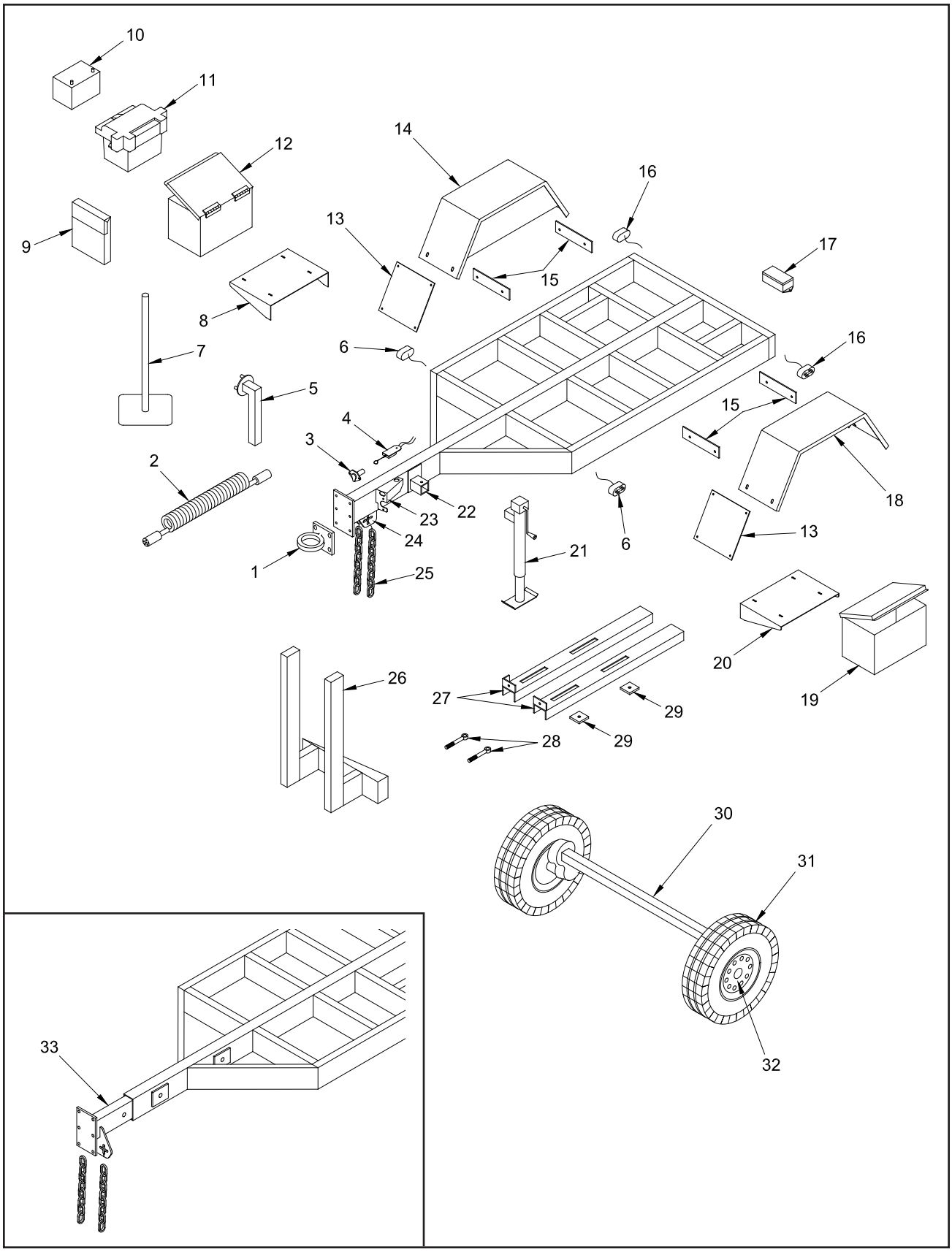

NOTE: Parts may not be exactly as shown.

Bandit

LOCATION	MODEL 250 PART NUMBER	MODEL 254 PART NUMBER	DESCRIPTION
1 a.	900-5900-13	900-5900-13	2 1/2” Heavy Duty Pintle Ring Hitch
b.	900-5905-73	900-5905-73	3” Heavy Duty Pintle Ring Hitch
c.	980-0505-33	980-0505-33	2 5/16” Ball Coupler Assembly
d.	*--*	*--*	Other Hitch Options Available
2 a.	900-2911-26	900-2911-26	Coil Cable Assembly With 6 Prong Plugs - 12’
b.	900-2904-12	900-2904-12	6-Prong Trailer Plug Male Plug Only
3.	900-2904-13	900-2904-13	6-Prong Trailer Plug Female Plug Only
4.	900-5900-09	900-5900-09	Electrical Breakaway Switch
5.	980-0510-51	980-0510-51	Optional Spare Tire Mount
6.	900-2915-97	900-2915-97	LED Amber Marker Light
7 a.	980-200202	980-200202	Optional Cone Holder (Replaces 980-0508-30)
b.	980-200215	980-200215	Optional Bolt-On Cone Holder (Not Shown)
c.	980-200107	980-200107	Optional Hoop Style Cone Holder (Not Shown)
d.	900-7900-86	900-7900-86	Cap For Cone Holder (Not Shown)
8.	980-200205	980-200205	Battery Box Tray
9.	900-9902-07	900-9902-07	Manual Holder
10 a.	900-6900-01	N/A	460 CCA Battery
b.	900-6900-02	900-6900-02	660 CCA Battery
c.	900-6900-73	900-6900-73	1000 CCA Battery
11 a.	900-7900-01	N/A	Plastic Battery Liner Box for 460 CCA Battery
b.	900-7900-08	900-7900-08	Plastic Battery Liner Box for 660 CCA Battery
12 a.	980-0509-89	N/A	Steel Battery Box For 460 CCA Battery And Manual Holder
b.	900-7900-78B	N/A	Aluminum Battery Box For 460 CCA Battery And Manual Holder
c.	900-7900-78B	900-7900-78B	Aluminum Battery Box For 660 CCA Battery And Manual Holder
d.	980-0509-37	980-0509-37	Steel Battery Box For 660 CCA Battery And Manual Holder
e.	914-0503-57	914-0503-57	Steel Battery Box For 1000 CCA Battery And Manual Holder
13.	980-0128-91	981-1007-89	Optional Stone Guard
14 a.	900-5904-43	N/A	Right Hand Aluminum Fender
b.	980-0132-25	981-1006-62	Right Hand H.D. Aluminum Fender
c.	980-0509-24	N/A	Right Hand Steel Fender
d.	955-1001-73	955-1001-73	Right Hand Steel Tandem Fender - 12”
e.	980-0507-35	981-0501-82	Right Hand H.D. Steel Fender
15.	980-0128-14	N/A	Aluminum Fender Mount
16.	900-2915-98	900-2915-98	LED Red Marker Light
17.	900-2902-41	900-2902-41	Junction Box for Wiring
18 a.	900-5904-43	N/A	Left Hand Aluminum Fender
b.	980-0132-25	981-1006-62	Left Hand H.D. Aluminum Fender
c.	980-0509-23	N/A	Left Hand Steel Fender
d.	955-1001-73	955-1001-73	Left Hand Steel Tandem Fender - 12”
e.	980-0507-35	981-0501-81	Left Hand H.D. Steel Fender
19 a.	900-7900-78	900-7900-78	Aluminum Tool Box
b.	980-0508-37	980-0508-37	Steel Tool Box
20.	980-200204	980-200204	Tool Box Tray

**** Order Brake Hub And Drum Assembly According To Axle Type.**
(Grease Type, Oil Type, Never Lube Type).
***-* Engine Rails And Adjusters Will Vary Depending On Engine And Component Options.**
Order By Serial Number Of Chipper Or Physical Description.
NOTE: Other Fenders And Fender Stone Shields Are Optional.

Copyright 8/07

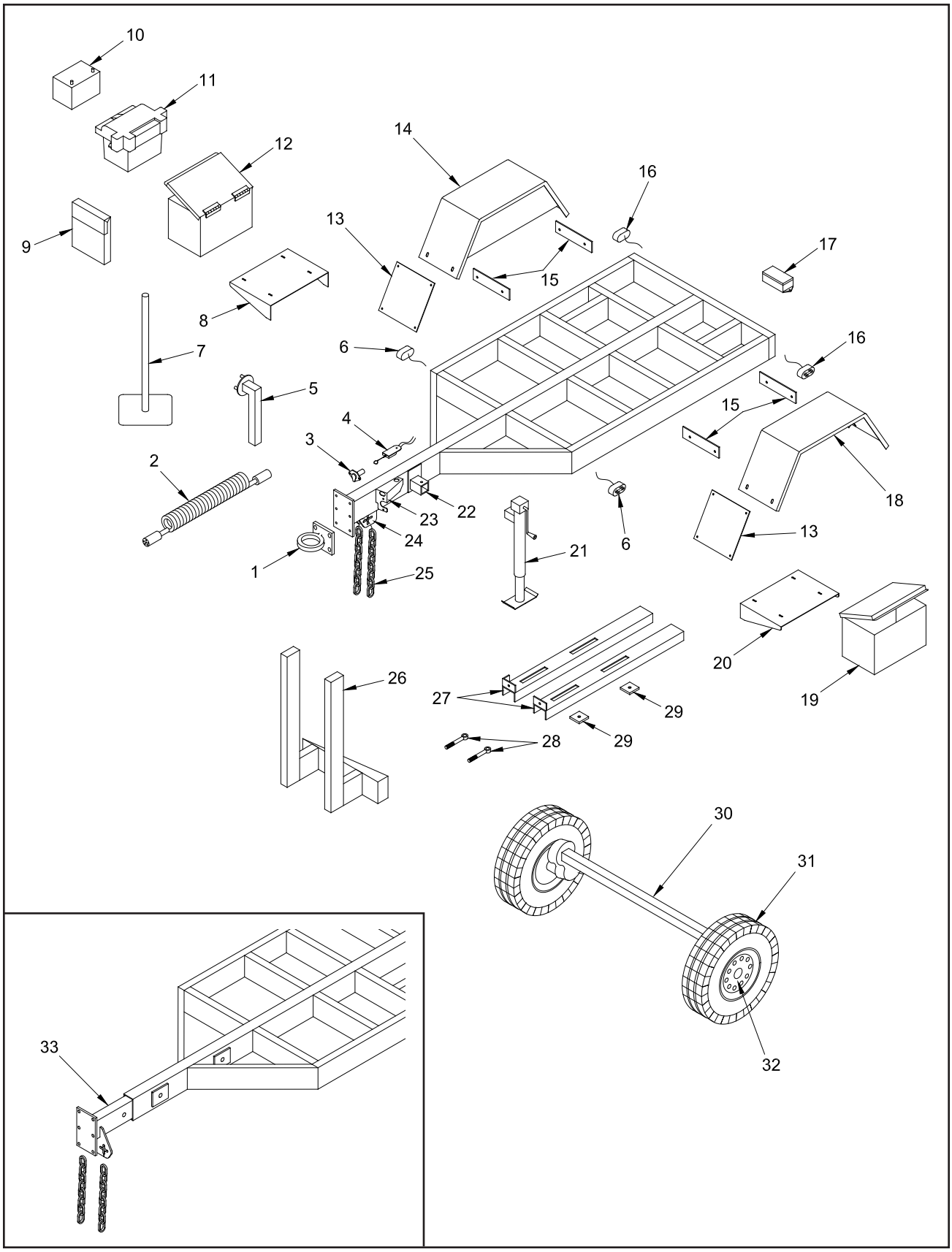

NOTE: Parts may not be exactly as shown.

Bandit

LOCATION	MODEL 250 PART NUMBER	MODEL 254 PART NUMBER	DESCRIPTION
21 a.	900-5906-10	N/A	2,000 Lbs. Side Crank Jack - Zinc (Replaces 900-5903-79)
b.	900-5908-48	N/A	1,000 Lbs. Poly Wheel Jack - Square Mount (Replaces 900-5908-16)
c.	900-5902-42	N/A	1,000 Lbs. Steel Castor Wheel Jack (Round Mount)
d.	980-0505-34	N/A	1,000 Lbs. Rubber Castor Wheel Jack
e.	900-5906-11	900-5906-11	5,000 Lbs. Top Crank Jack - Zinc (Replaces 900-5905-70)
f.	900-5903-86	900-5903-86	5,000 Lbs. Side Crank Jack
g.	900-5903-78	900-5903-78	8,000 Lbs. Drop Leg Jack
h.	N/A	900-5904-82	10,000 Lbs. Drop Leg Jack - Stationary
22 a.	910-1001-29	N/A	Pivot Mount For 2,000 Lbs. Jack
b.	900-5905-71	N/A	Pivot Mount For 1,000 Lbs. Steel or Rubber Castor Wheel Jack (Square)
c.	910-1001-29	N/A	Pivot Mount For 1,000 Lbs. Steel or Rubber Castor Wheel Jack (Round)
d.	937-1002-31	937-1002-31	Pivot Mount For 5,000 Lbs. Jack
e.	980-0127-45	980-0127-45	Mount For 8,000 Lbs. Drop Leg Jack
f.	980-0127-44	980-0127-44	Pin For 8,000 Lbs. Drop Leg Jack
23.	980-300106	980-300106	Trailer Plug Receptacle Mount
24.	980-0121-31	980-0121-31	Safety Chain Holder
25 a.	900-4912-70	900-4912-71	Safety Chain W / Hooks and Spring Latches for Standard Tongue
b.	900-4908-01	900-4912-38	Safety Chain W / Hooks and Spring Latches for Telescopic Tongue
c.	900-4913-12	900-4905-77	Hook For Safety Chain
26.	980-0508-61	980-0508-61	Optional Radiator Guard Post Assembly
27.	*-*	*-*	Engine Rails
28 a.	900-4902-29	900-4902-29	Engine Adjuster Rod End - 1/2”-13NC X 6”
b.	900-4905-11	900-4905-11	Engine Adjuster Rod End - 5/8”-11NC X 6”
29 a.	922-0003-38	922-0003-38	Engine Mount Pad For 1/2” Engine Hold Down
b.	980-0101-33	980-0101-33	Engine Mount Pad For 5/8” Engine Hold Down
30 a.	900-5902-69	N/A	7,000 Lb. Torflex Axle Assembly (No Brake)
b.	900-5902-70	900-5902-70	7,000 Lb. Torflex Axle Assembly (Electric Brake)
c.	900-5902-71	900-5902-71	7,000 Lb. Torflex Axle Assembly (Hydraulic Brake)
d.	900-5902-78	900-5902-78	8,000 Lb. Torflex Axle Assembly - 9/16” Studs (No Brake)
e.	900-5902-79	900-5902-79	8,000 Lb. Torflex Axle Assembly - 9/16” (Electric Brakes
f.	900-5902-80	900-5902-80	8,000 Lb. Torflex Axle Assembly - 9/16” (Hydraulic Brake)
g.	900-5904-57	900-5904-57	8,000 Lb. Torflex Axle Assembly - 5/8” Studs (No Brake)
h.	900-5904-55	900-5904-55	8,000 Lb. Torflex Axle Assembly - 5/8” (Electric Brakes)
i.	900-5904-56	900-5904-56	8,000 Lb. Torflex Axle Assembly - 5/8” (Hydraulic Brake)
j.	900-5903-93	900-5903-93	10,000 Lb. Torflex Axle Assembly (Electric Brakes)
k.	N/A	900-5904-06	12,000 Lb. Spring Axle Assembly (Electric Brakes)

**** Order Brake Hub And Drum Assembly According To Axle Type.**
(Grease Type, Oil Type, Never Lube Type).
***-* Engine Rails And Adjusters Will Vary Depending On Engine And Component Options.**
Order By Serial Number Of Chipper Or Physical Description.
NOTE: Other Fenders And Fender Stone Shields Are Optional.

Copyright 8/07

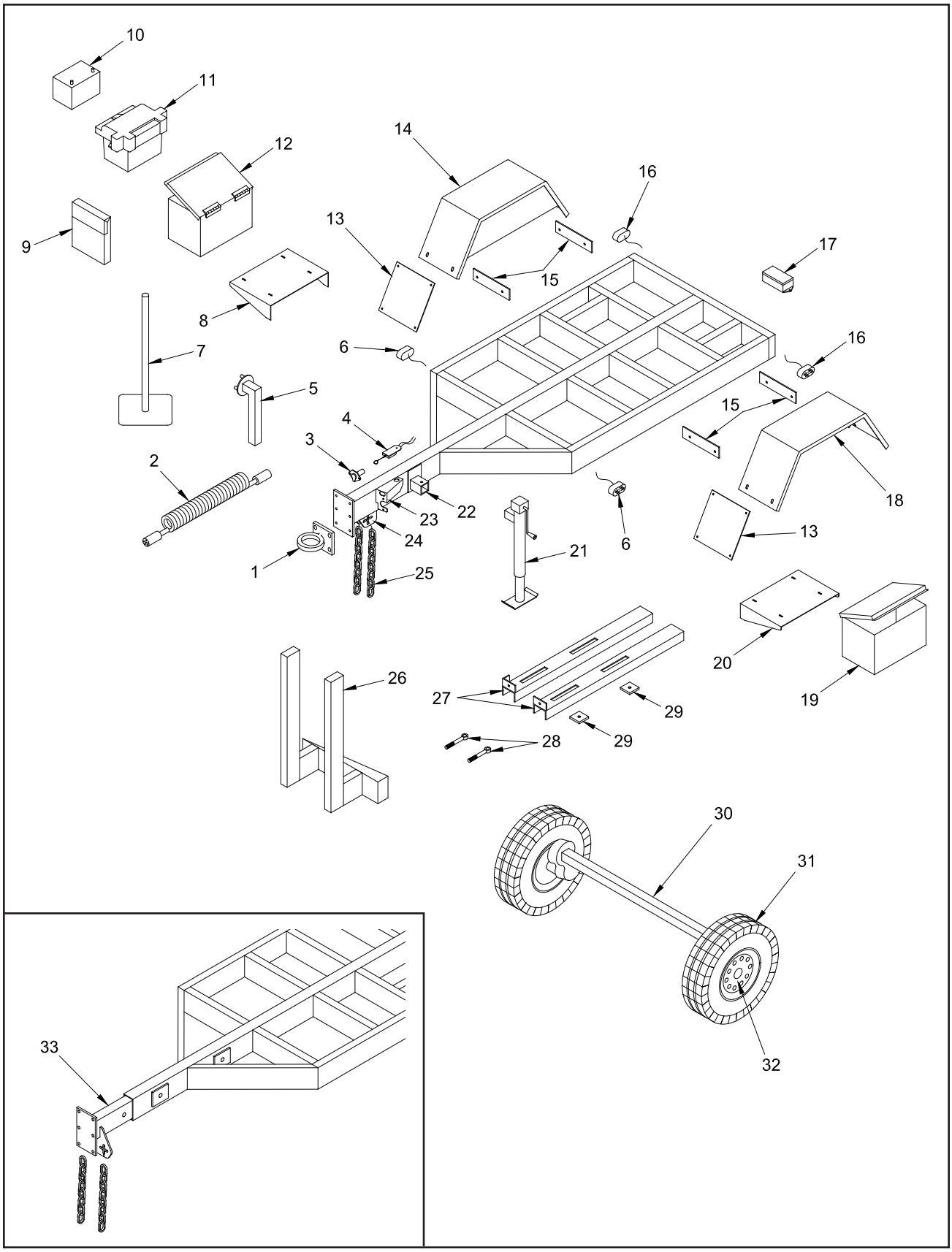

NOTE: Parts may not be exactly as shown.

Bandit

LOCATION	MODEL 250 PART NUMBER	MODEL 254 PART NUMBER	DESCRIPTION
31 a.	900-5904-20	900-5904-20	245/75R-16” Tire and White Spoke, 8-Bolt Rim
b.	N/A	900-5904-64	245/75R-16” Tire and White Dual, 8-Bolt Rim
c.	900-5904-18	900-5904-18	245/75R-16” Tire Only
d.	900-5904-22	900-5904-22	16” x 6” White Spoke, 8-Bolt Rim Only
e.	N/A	900-5904-66	16” x 6” White Dual, 8-Bolt Rim Only
f.	900-5905-48	N/A	265/75R-16” Tire and White Spoke, 8-Bolt Rim
g.	900-5905-47	N/A	265/75R-16” Tire Only
h.	900-5905-14	900-5905-14	285/75R-16” Tire and White Spoke, 8-Bolt Rim
i.	900-5905-13	900-5905-13	285/75R-16” Tire Only
j.	N/A	900-5905-03	235/85R-16” Tire and White Spoke, 8-Bolt Rim
k.	N/A	900-5905-01	235/85R-16” Tire Only
l.	900-5904-76	900-5904-76	235/75R-17.5” Tire and Solid Gray, 8-Bolt Rim
m.	900-5904-48	900-5904-48	235/75R-17.5” Tire Only
n.	900-5904-49	900-5904-49	17.5” x 6.75” Solid Gray, 8-Bolt Rim Only
32.	**	**	Brake Hub and Drum Assembly
33.	981-0501-18	914-0503-36	Telescopic Tongue Assembly
34 a.	980-0508-25	980-0508-25	Optional Wheel Chock Holders Aluminum Bolt-On (Not Shown)
b.	980-0508-26	980-0508-26	Optional Wheel Chock Holders Metal Weld-On (Not Shown)
35.	900-5902-32	900-5902-32	Optional Rubber Wheel Chock (Not Shown)
36.	900-5900-62	900-5900-62	Optional Safety Flags For Fenders (Not Shown)
37.	900-7900-48	900-7900-48	Optional Mud Flap (Not Shown)
38 a.	900-9904-94	900-9904-94	Optional Vice (Not Shown)
b.	980-300113	980-300113	Optional Weld-On Vice Mount (Not Shown)

**** Order Brake Hub And Drum Assembly According To Axle Type.**
(Grease Type, Oil Type, Never Lube Type).
***-* Engine Rails And Adjusters Will Vary Depending On Engine And Component Options.**
Order By Serial Number Of Chipper Or Physical Description.
NOTE: Other Fenders And Fender Stone Shields Are Optional.

Copyright 8/07

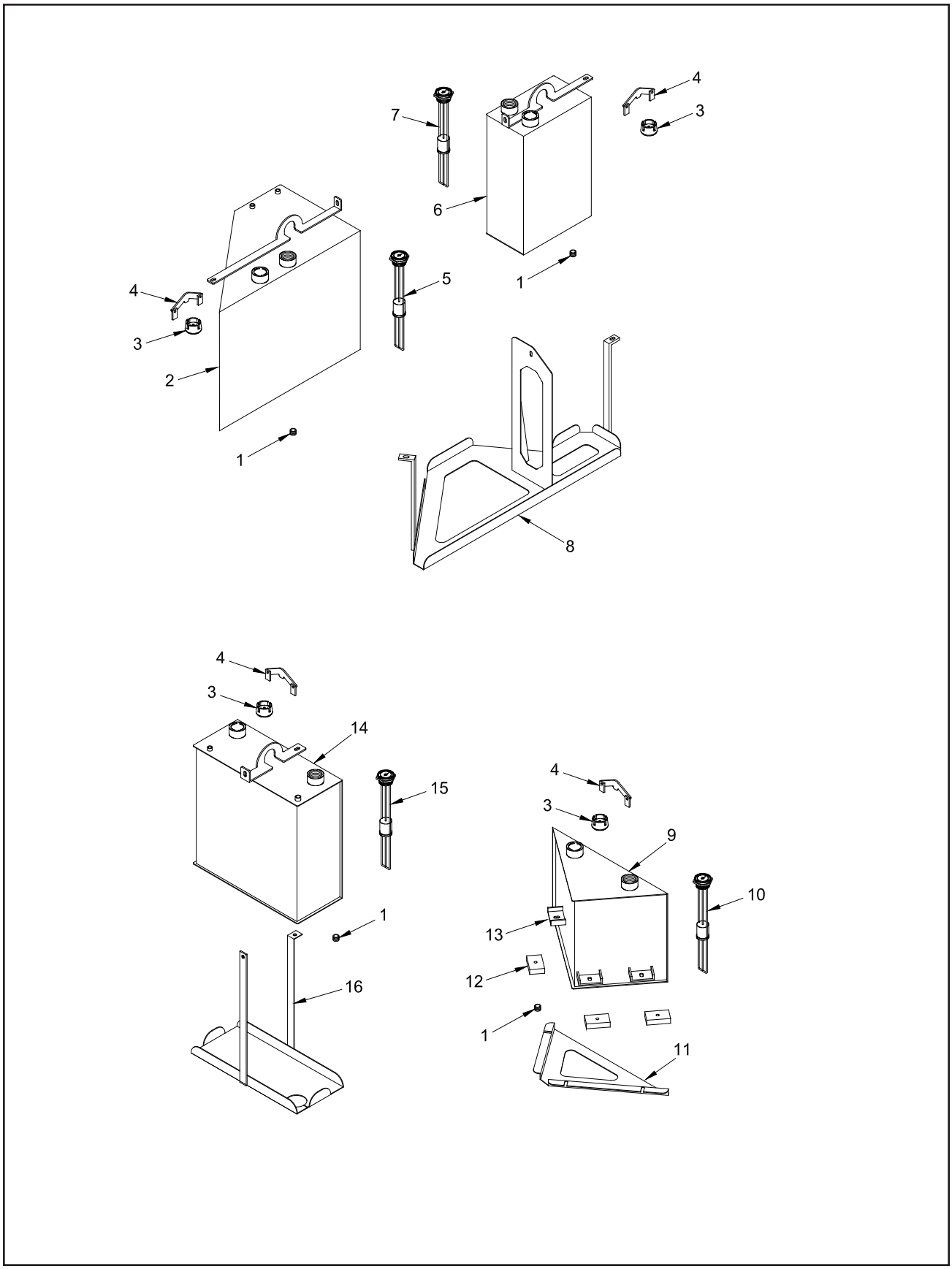

NOTE: Parts may not be exactly as shown.

Bandit

LOCATION	PART NUMBER	DESCRIPTION
1.	900-3922-60	Magnetic Drain Plug
2 a.	981-200007	40 Gallon Stream Line Fuel Tank Assembly
b.	981-200024	60 Gallon Stream Line Fuel Tank Assembly
3 a.	900-3917-71	Fill Cap Only No Dipstick (Steel Tank)
b.	900-3907-66	Fill Cap With Dipstick (Steel Tank)
c.	900-3907-67	Fill Cap For Plastic Tank
4 a.	980-0506-85	Fill Cap Lock Assembly For Steel Tank
b.	980-0508-50	Fill Cap Lock Assembly For Plastic Tank (Not Shown)
5 a.	900-2903-95	Rochester Sight Gauge For 40 Gallon Stream Line Fuel Tank
b.	900-2923-28	Rochester Sight Gauge For 60 Gallon Stream Line Fuel Tank
6.	980-0510-74	13 Gallon Rectangle Hydraulic Tank Assembly
7.	900-2903-95	Rochester Sight Gauge For 13 Gallon Rectangle Hydraulic Tank
8 a.	981-200020	Tank Mount Tray - 40 Gal. Stream Line Fuel Tank & 13 Gal. Rect. Hyd. Tank
b.	981-200025	Tank Mount Tray - 60 Gal. Stream Line Fuel Tank & 13 Gal. Rect. Hyd. Tank
c.	900-0104-95	Rubber Fuel Tank Pad (Not Shown)
9.	980-0508-71	12 Gallon Triangle Hydraulic Tank Assembly
10.	900-2903-94	Rochester Sight Gauge For 12 Gallon Hydraulic Tank
11.	980-0133-92	12 Gallon Triangle Hydraulic Tank Mount Tray
12.	900-7900-14	Rubber Mounting Pad
13.	980-0123-07	Tank Mount - Welded To Tank
14 a.	937-0500-09	40 Gallon Rectangle Fuel Tank Assembly
b.	980-0509-58	24 1/2 Gallon Rectangle Fuel Tank Assembly
c.	900-3908-92	24 1/2 Gallon Rectangle Plastic Fuel Tank
d.	914-0502-10	60 Gallon Rectangle Fuel Tank Assembly
15 a.	900-2903-95	Rochester Sight Gauge For 40 Gallon Rectangle Fuel Tank
b.	900-2903-95	Rochester Sight Gauge For 24 1/2 Gallon Rectangle Fuel Tank
c.	900-2904-14	Rochester Sight Gauge For 60 Gallon Rectangle Fuel Tank
16 a.	937-0500-32	40 Gallon Rectangle Fuel Tank Mount Tray
b.	980-0508-41	24 1/2 Gallon Rectangle Fuel Tank Mount Tray
c.	980-0508-04	24 1/2 Gallon Rectangle Plastic Fuel Tank Mount Tray
d.	955-0500-38	60 Gallon Rectangle Fuel Tank Mount Tray
17 a.	900-4912-40	Padlock For Tank With Short Shackle For Locking Cap (Not Shown)
b.	P812	Key For Padlock (Not Shown)

NOTE: Components vary with fuel type.
Specify gas or diesel when ordering fuel tank components.

NOTE: Tank assemblies vary with options.
Specify all options when ordering.

Copyright 8/07

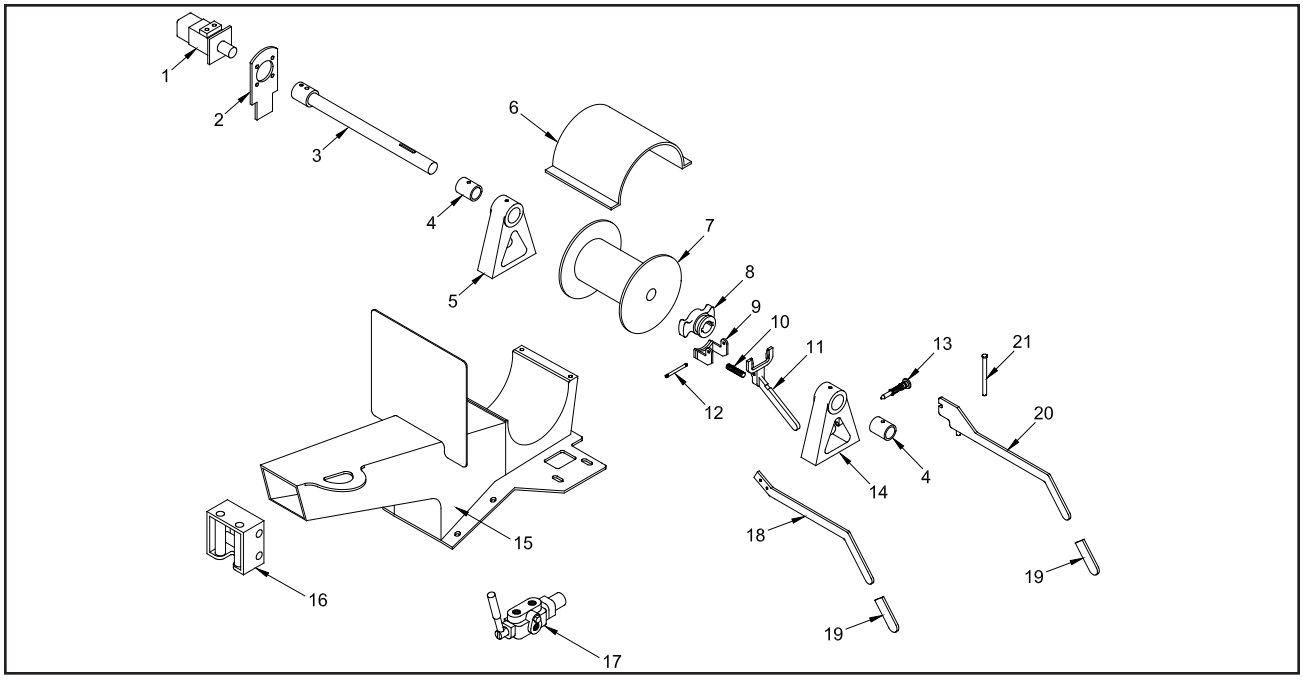

LOCATION		PART NUMBER	DESCRIPTION
1	a.	900-3921-57	Winch Hydraulic Motor (SAE O-rings) “RS” - Square
	b.	900-3902-14	Winch Hydraulic Motor (Pipe Fittings) “RS” - Square
	c.	900-3924-39	Winch Hydraulic Motor (SAE O-rings) “RE” - Round
2	a.	981-1001-01	Winch Motor Torque Arm For “RS” Motor
	b.	955-1011-71	Winch Motor Torque Arm For “RE” Motor
3	a.	43626	Winch Shaft Only
	b.	900-3905-22	Winch Shaft With Keys
4.		40003	Winch Bushing For A Frame
5.		900-3905-21	Winch A Frame Arm (Also Includes # 4)
6.		980-300260	Winch Drum Cover
7.		900-3905-19	Winch Drum
8.		900-3905-17	Winch Clutch
9.		40473	Winch Brake Shoe Only
10.		40024	Winch Spring
11	a.	40469	Winch Shift Lever Only
	b.	900-3905-16	Winch Shift Lever With #’s 9 & 10
12	a.	40025	Winch Pin For Brake Assembly
	b.	41669	Winch Snap Ring For Winch Pin
13.		900-3905-14	Winch Release Lever Pin Assembly
14.		900-3905-18	Winch Arm (Includes #’s 4, 9 - 13)
15	a.	980-200162	Winch Tunnel Assembly
	b.	920-200027	Winch Tunnel Assembly For 2090 With Loader Or 1850 With Loader & Cab (Not Shown)
	c.	955-200076	Winch Tunnel Assembly For 1850 With Loader Or 2090 With Loader & Cab (Not Shown)
16	a.	980-0505-82	Winch Roller Assembly
	b.	914-1004-18	Winch Roller Only
	c.	900-4902-27	Winch Roller Bolt Only
17	a.	900-3920-01	Winch Valve (SAE O-rings)
	b.	900-3901-42	Winch Valve (Pipe Fittings)
18.		955-300376	Winch Shift Lever Extension (If Applicable)
19.		900-9904-59	Vinyl Cap For Handle Extension (If Applicable)
20.		955-300377	Lock Pin Handle Extension (If Applicable)
21.		900-4913-00	Pivot Pin For Winch Handle Extension (If Applicable)
22.		904-0002-60	Winch Kit (Includes #’s 1 - 17)

NOTE: Parts may not be exactly as shown.

Copyright 8/07

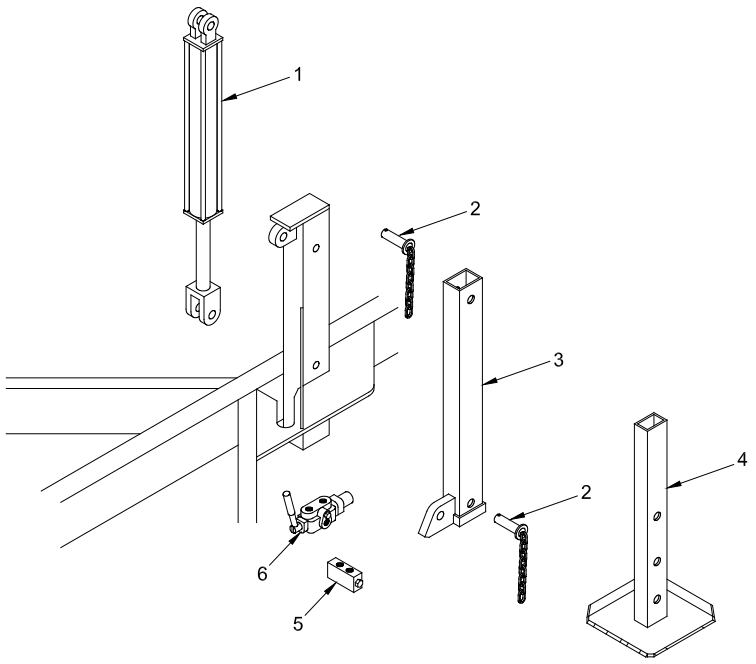

LOCATION		PART NUMBER	DESCRIPTION
1	a.	900-3934-24	Tongue Jack Cylinder - Welded
	b.	900-3912-12	Tongue Jack Cylinder - Tie Rod
2.		914-1000-38	Lock Pin
3.		980-0131-50	Inside Tube Assembly
4.		980-0509-53	Drop Leg Foot Pad Assembly
5.		900-3925-94	Check Valve
6	a.	900-3920-01	Tongue Jack Valve (SAE O-rings)
	b.	900-3901-42	Tongue Jack Valve (Pipe Fittings)
7.		980-0509-00	Hydraulic Tongue Jack Kit (Includes #'s 1 - 6)

NOTE: Parts may not be exactly as shown.

Copyright 8/07

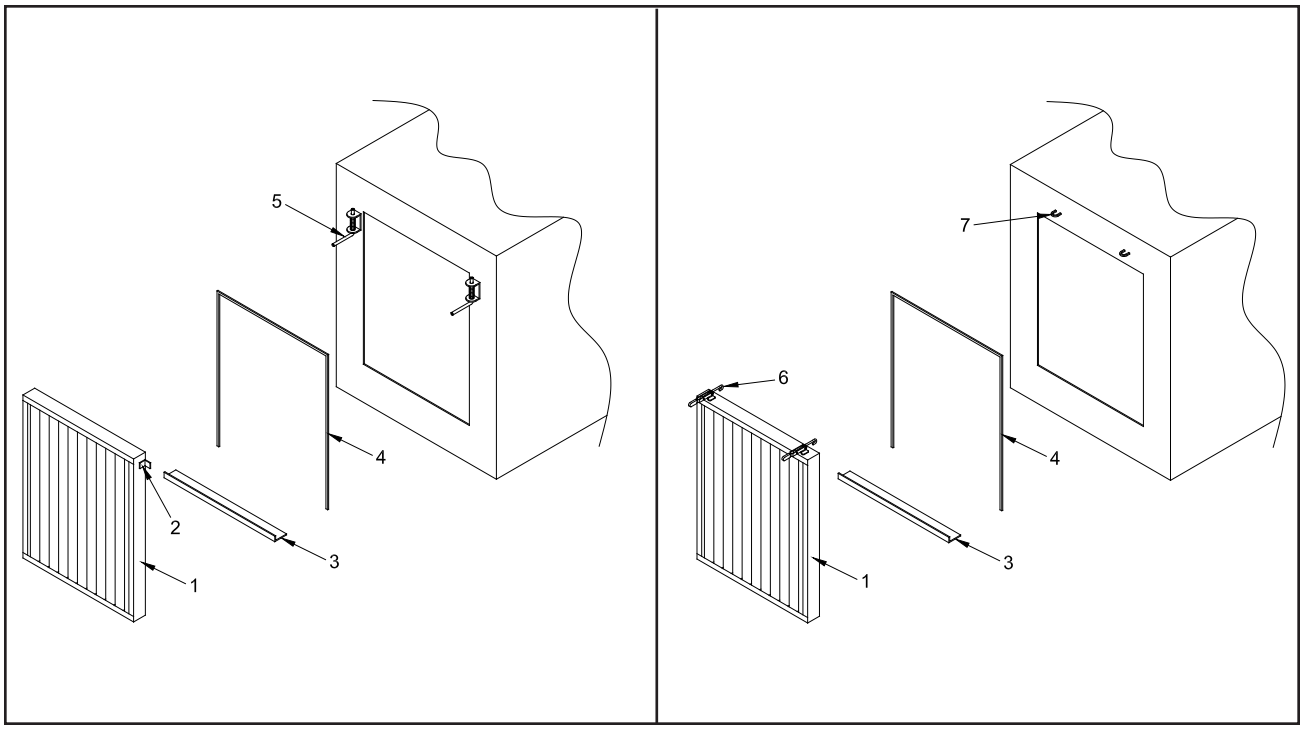

LOCATION	PART NUMBER	DESCRIPTION
1.	980-0508-17	Bandit H.D. Foldaway Radiator Screen Ass'y (specify latch type)
2.	980-0122-86	Spring Lock Tab Foldaway Radiator Screen
3.	*-*	Mount Tray For Foldaway Radiator Screen
4.	900-7900-57	Weather Strip
5 a.	900-4901-83	Spring Lock Plunger
b.	900-7900-93	Rubber Cap For Spring Lock - 1/2" Diameter
6.	900-4901-61	Hook Pull Clamp
7.	980-0128-77	Lock Tab For Hook

***-* Will Vary Depending On Engine And Component Options. Order By Serial Number Of Chipper Or Physical Description.**

NOTE: Parts may not be exactly as shown.

Copyright 8/07

MODEL 250 PTO

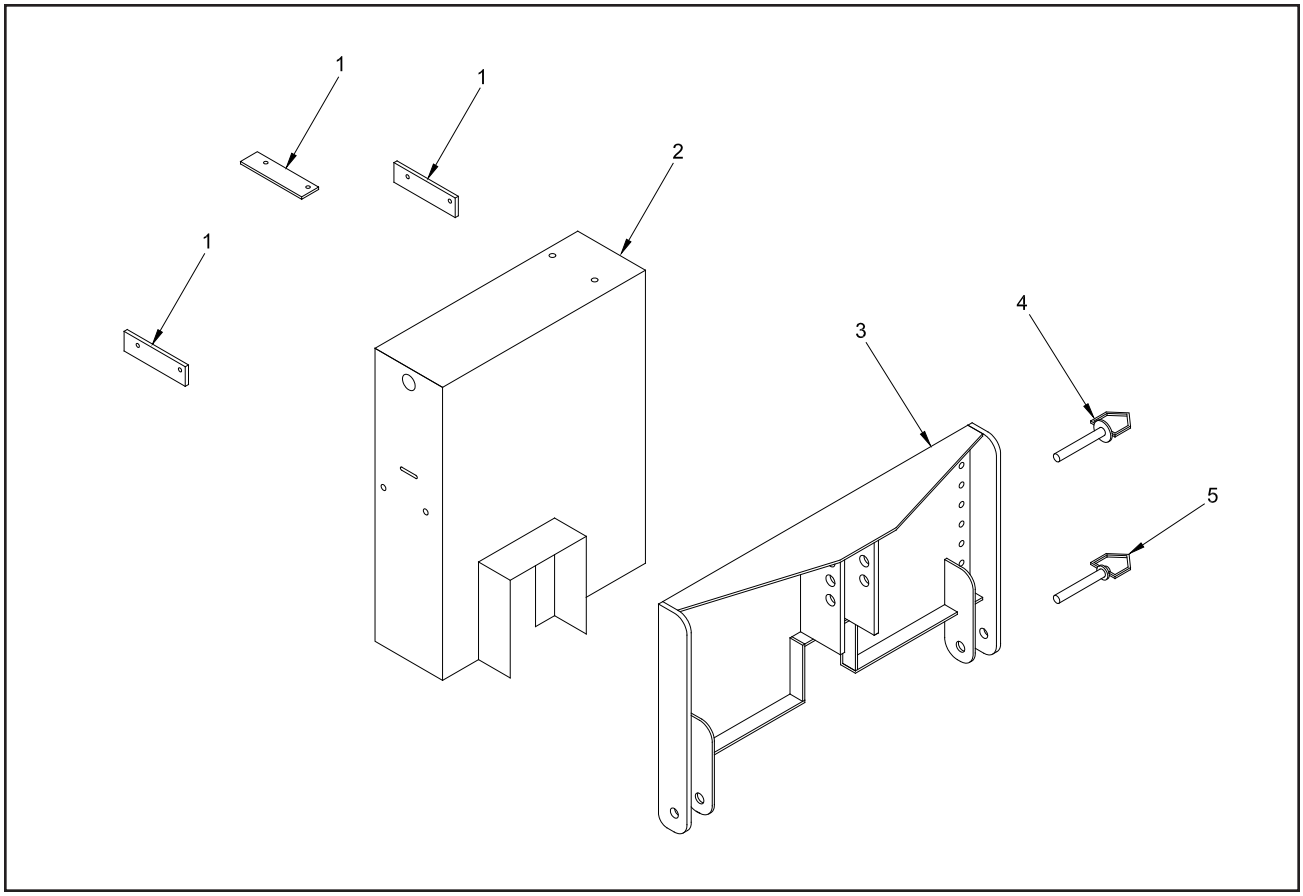

LOCATION	MODEL 250 PART NUMBER	DESCRIPTION
1.	980-0114-68	Beltshield Mount
2.	980-0507-11	Beltshield Assembly
3.	980-200039	3-Point Hitch - Standard Category 2
4.	900-4902-36	3-Point Top Hitch Pin (1” Diameter)
5.	900-4905-15	3-Point Bottom Hitch Pin (1 1/8” Diameter)

NOTE: Parts may not be exactly as shown.

MODEL 250 PTO

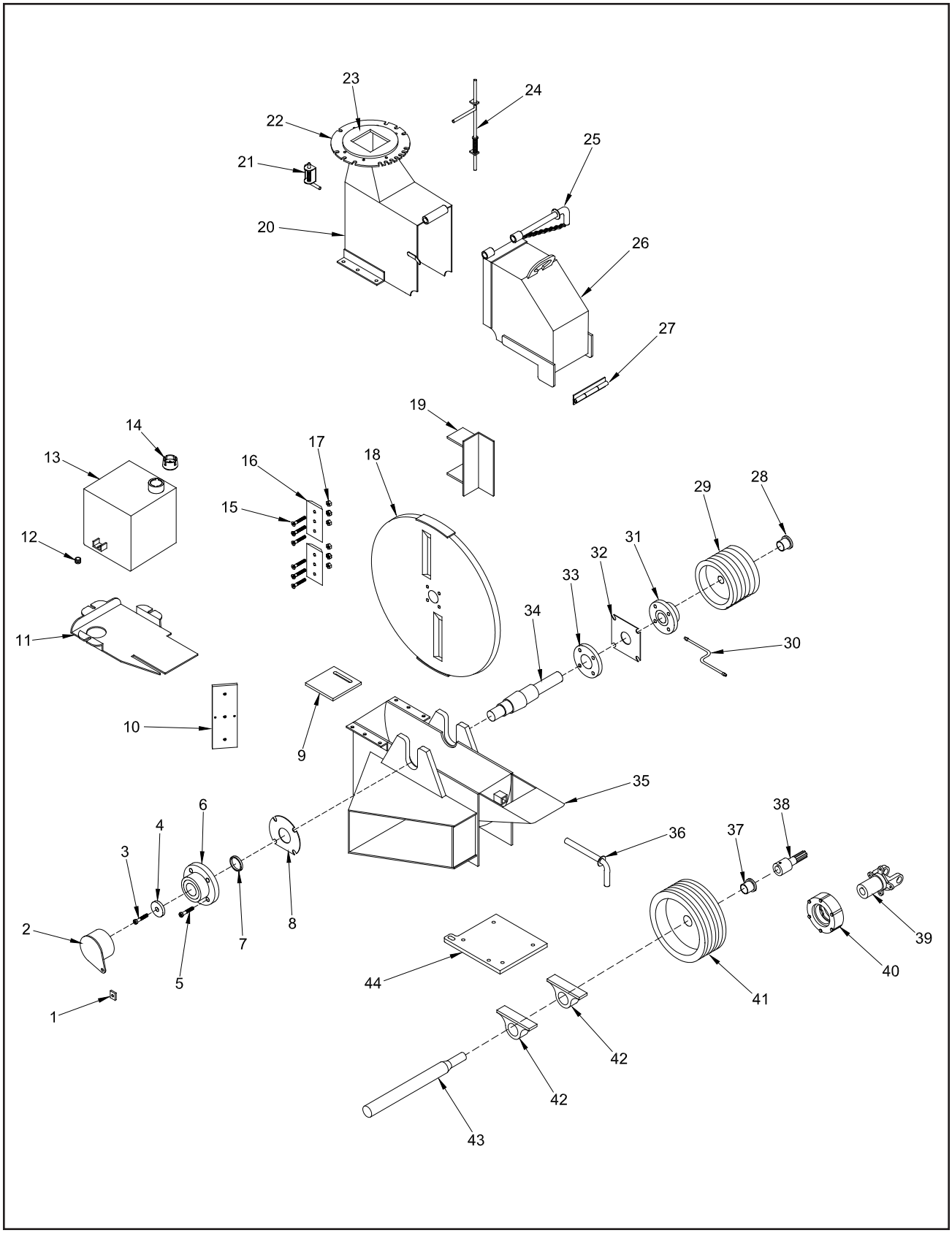

NOTE: Parts may not be exactly as shown.

Bandit

MODEL 250 PTO

LOCATION	PART NUMBER	DESCRIPTION
1.	980-0119-57	Front Chipper Bearing Cover Mount Tab
2.	980-200217	Front Chipper Bearing Cover
3 a.	900-4902-78	Bearing Retainer Bolt
b.	900-4900-33	Bearing Retainer Bolt Washer (Not Shown)
4.	980-0125-10	Bearing Retainer
5.	900-4901-11	Front Chipper Bearing Bolt
6.	900-1900-33	Front Chipper Bearing
7 a.	980-0101-72	1/16” Chipper Disc Spacer
b.	980-0101-73	1/8” Chipper Disc Spacer
c.	980-0101-74	3/16” Chipper Disc Spacer
d.	980-0101-75	1/4” Chipper Disc Spacer
8.	980-0119-38	Front Chipper Bearing Backer Plate (Optional)
9.	980-0134-26	Pump Mount
10.	See Page 105	Anvil
11.	980-300194	Hydraulic Tank Tray
12.	900-3922-60	Magnetic Drain Plug
13 a.	980-0506-92	Hydraulic Tank (Specify Options)
b.	900-2903-94	Rochester Sight Gauge (Not Shown)
14 a.	900-3917-71	Fill Cap (Not Shown)
15.	See Page 104	Chipper Knife Bolt
16.	See Page 104	Chipper Knife
17.	See Page 104	Chipper Knife Nut
18 a.	981-200055	2-Knife Chipper Disc Ass’y With New Style 4 1/2” Wide Knives
b.	981-0500-46	2-Knife Chipper Disc Ass’y With Old Style 4” Wide Knives
c.	981-200056	3-Knife Chipper Disc Ass’y With New Style 4 1/2” Wide Knives
d.	981-0500-47	3-Knife Chipper Disc Ass’y With Old Style 4” Wide Knives
19.	*-*	Fan Blade Assembly
20 a.	980-200062	Chipper Hood Stationary Half - Manual Swivel Discharge
b.	980-200064	Chipper Hood Stationary Half - Hand Crank Swivel Discharge
c.	980-200148	Chipper Hood Stationary Half - Hydraulic Swivel Discharge
21 a.	900-4904-90	Discharge Spring Lock
b.	900-7900-96	Rubber Cap (Not Shown)
22 a.	980-0128-24	Bottom Swivel Ring For Manual Swivel Discharge
b.	980-0128-23	Bottom Swivel Ring For Hand Crank Swivel Discharge
c.	980-0122-18	Bottom Swivel Ring For Hydraulic Swivel Discharge
23.	980-300349	Bottom Swivel Flange
24 a.	980-0508-54	Spring Lock For Hood Pin
b.	900-7900-93	Black Vinyl Cap (Not Shown)
25 a.	980-0123-29	Hood Pin With Attaching chain
b.	900-4902-20	Padlock For Hood Pin (Not Shown)
c.	P812	Key For Padlock (Not Shown)

- Components vary, order according to S/N of chipper or physical description.

Copyright 8/07

MODEL 250 PTO

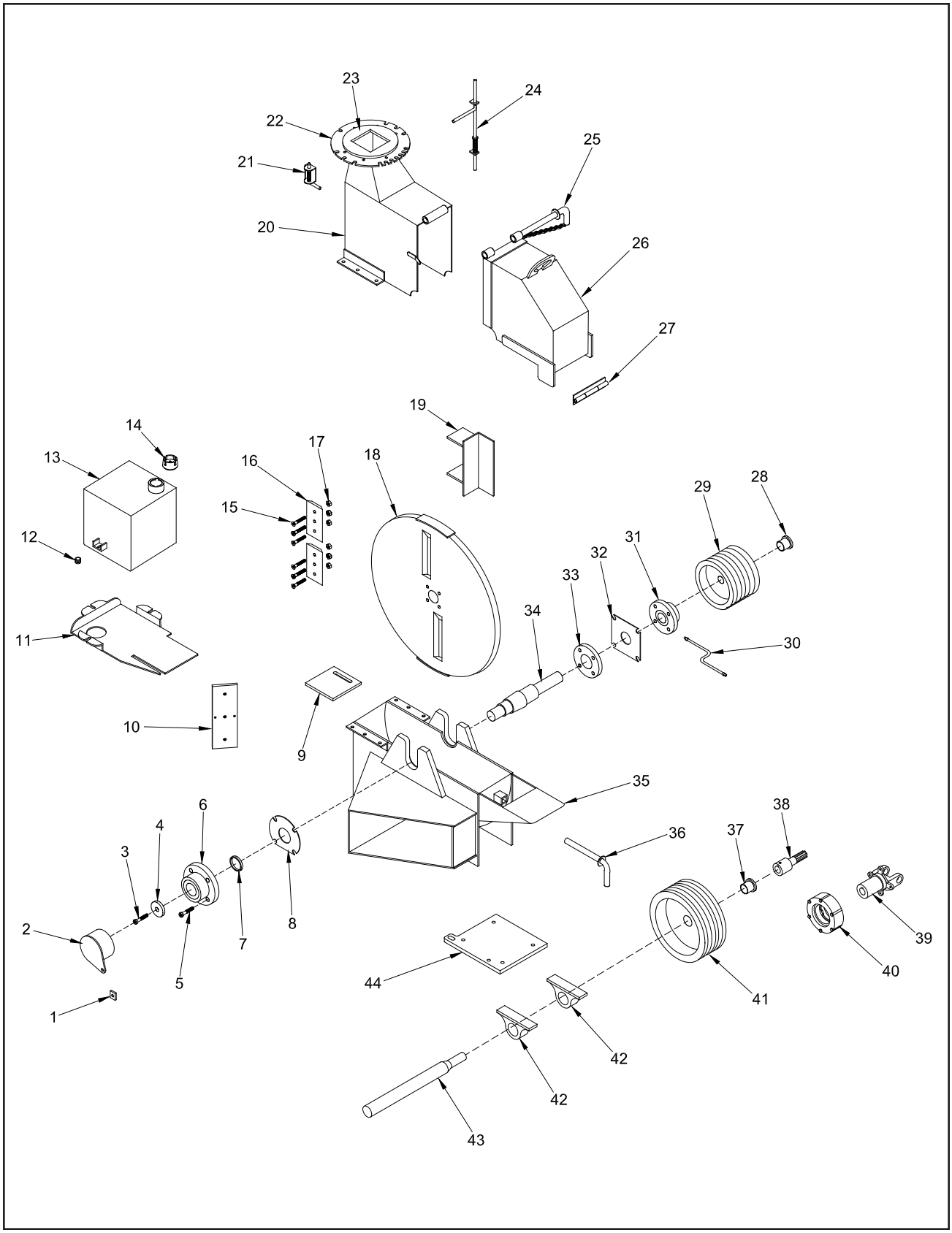

NOTE: Parts may not be exactly as shown.

MODEL 250 PTO

LOCATION	PART NUMBER	DESCRIPTION
26.	980-200063	Chipper Hood Hinged Half
27.	980-0101-59	Hood Hinge
28.	**	Chipper Sheave Bushing
29.	**	Chipper Sheave
30.	900-3900-24	Rear Chipper Bearing Grease Line
31 a.	900-1900-34	Rear Chipper Bearing
b.	900-4903-32	Rear Chipper Bearing Bolt (Not Shown)
32.	980-0121-65	Rear Chipper Bearing Baker Plate (Optional)
33 a.	980-0126-63	Chipper Draw Ring
b.	900-4902-96	Chipper Draw Ring Bolt (Not Shown)
c.	900-4902-97	Chipper Draw Ring Nut (Not Shown)
34.	914-1003-28	Chipper Shaft Assembly
35.	980-0134-14	Hood Stop
36.	955-1015-32	Chipper Disc Lock Pin
37.	**	Drive Sheave Bushing
38 a.	900-1907-96	6 Spline Adaptor - 1 1/2” Dia. Shaft To 1 3/8” Dia. 6 Spline (Start 2/03)
b.	900-1903-25	6 Spline Adaptor - 1 3/8” Dia. Shaft To 1 3/8” Dia. 6 Spline (Pre 2/03)
c.	980-0113-54	21 Spline Adaptor - 1 3/8” Dia. Shaft To 1 3/8” Dia. 21 Spline (Pre 2/03)
39 a.	900-6907-94	Yoke For Slip Clutch - 1 1/2” Diameter Shaft (Start 2/03)
b.	900-6902-20	Yoke For Slip Clutch - 1 3/8” Diameter Shaft (Pre 2/03)
40.	900-6902-52	Clutch Pack For Slip Clutch
41.	**	Drive Sheave
42 a.	900-1907-94	PTO Bearing - 2 1/4” Diameter (Start 2/03)
b.	900-1901-96	PTO Bearing - 1 3/8” Diameter (Pre 2/03)
43 a.	980-0134-75	PTO Shaft - 2 1/4” Diameter To 1 1/2” Diameter (Start 2/03)
b.	980-300329	PTO Shaft - 2 1/4” Diameter To 1 3/4” Diameter 20 Spline (Start 2/03)
c.	980-300322	PTO Shaft - 2 1/4” Diameter To 1 3/8” Diameter 6 Spline (Start 2/03)
d.	980-300323	PTO Shaft - 2 1/4” Diameter To 1 3/8” Diameter 21 Spline (Start 2/03)
e.	980-0110-21	PTO Shaft - 1 3/8” Diameter (Pre 2/03)
44 a.	980-0134-76	Belt Tightener Plate (Start 2/03)
b.	986-1108-55	Belt Tightener Plate (Pre 2/03)
c.	980-200067	Belt Tightener Hinge (Not Shown)
d.	900-4902-74	Belt Tightener Adjuster (Not Shown)
e.	900-4907-04	Adjuster Jam Nut (Not Shown)
f.	986-1108-58	Puller Block For Adjuster (Not Shown)
45.	980-0123-82	Chipper Disc Lock Tube On Disc (Not Shown)
46.	**	Chipper Belts (Not Shown)
47.	**	Hydraulic Pump Belts (Not Shown)

* * Components vary, order according to S/N of chipper or physical description.

Copyright 8/07

MODEL 250 PTO

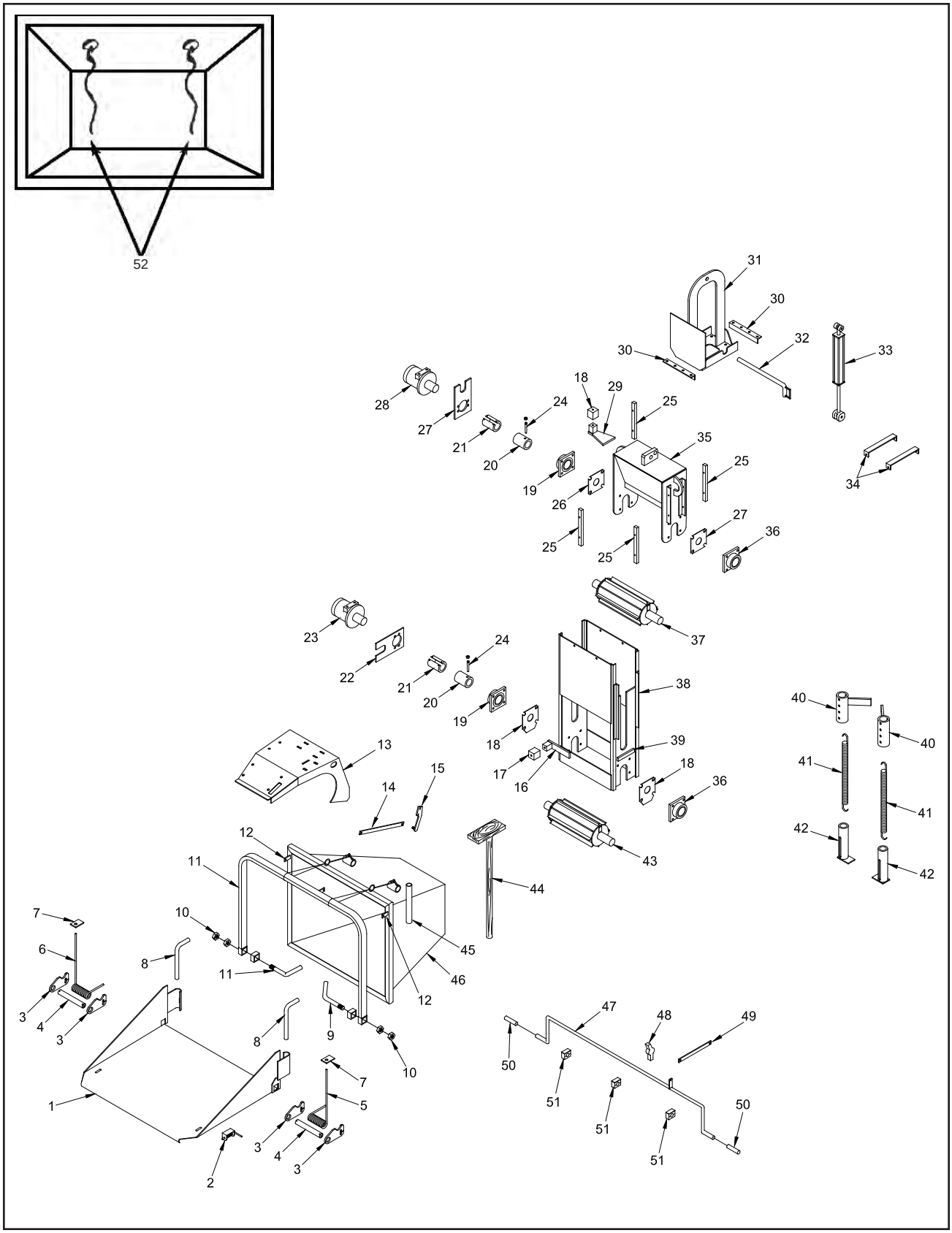

NOTE: Parts may not be exactly as shown.

Bandit

MODEL 250 PTO

LOCATION	PART NUMBER	DESCRIPTION
1.	980-200055	30” Folding Pan For Infeed Hopper
2 a.	900-4901-83	Folding Pan Spring Lock - 1/2” Diameter Pin
b.	900-7900-93	Rubber Cap For Spring Lock - 1/2” Diameter
3 a.	981-300320	Spring Mount For Spring Assist - 2” x 3” Rim
b.	980-0129-66	Spring Mount For Spring Assist - 2” Dia. Rim
4 a.	980-0129-86	Spring Tube For Spring Assist
b.	900-4905-45	Cotter Pin For Spring Tube (Not Shown)
5 a.	900-4905-40	Right Spring For Spring Assist
b.	980-0509-56	Spring Assist Kit (Includes 3 Through 7)
6 a.	900-4905-39	Left Spring For Spring Assist
b.	980-0509-56	Spring Assist Kit (Includes 3 Through 7)
7.	980-0133-34	Top Spring Block (Specify Length 1 1/2” or 2 1/2”)
8 a.	955-300086	Folding Pan Lock Pin
b.	900-7900-96	Rubber Cap For Lock Pin
9 a.	981-300151	Right Pivot Pin
b.	981-300152	Left Pivot Pin
10.	900-4900-44	Pivot Pin Jam Nut
11.	980-300002	Control Handle
12.	980-0131-65	Folding Pan Lock Tab For 1/2” Diameter Pin
13.	981-200048	Winch and Valve Mount
14 a.	980-100139	Hydraulic Control Arm - 20 1/2” (Start 8/04)
b.	980-0123-94	Hydraulic Control Arm - 17” (Pre 8/04)
15.	980-100141	Feedwheel Control Valve Linkage
16 a.	981-300198	Bottom Torque Arm Stop (Start 4/06)
b.	937-300316	Torque Arm Cushion Mount (Start 4/06)
c.	981-1006-71	Bottom Torque Arm Stop (Pre 4/06)
d.	955-1014-01	Torque Arm Stop Block (Pre 4/06)
17.	937-900009	Torque Arm Cushion (Start 4/06)
18 a.	981-300066	Bottom Feedwheel Bearing Backer Plate (Start 8/04)
b.	955-1001-12	Bottom Feedwheel Bearing Backer Plate (Pre 8/04)
19 a.	900-1909-80	Feedwheel Bearing (Grip-Tight Style) (Start 8/04)
b.	900-4912-37	Top Feedwheel Bearing Bolt (Start 8/04)
c.	900-4909-23	Bottom Feedwheel Bearing Bolt (Start 8/04)
d.	900-1900-66	Feedwheel Bearing (Pre 8/04)
e.	900-4900-15	Top Feedwheel Bearing Bolt (Pre 8/04)
f.	900-4900-16	Bottom Feedwheel Bearing Bolt (Pre 8/04)
20 a.	981-300140	Coupler With Motor Nut and Taper Pin With Nut (Start 6/05)
b.	981-1006-45	Coupler With Motor Nut and Taper Pin (Pre 6/05)
21 a.	900-7901-23	Rubber Coupler Guard - 17 3/4” (Start 6/05)
b.	900-7900-38	Rubber Coupler Guard - 15 3/4” (Pre 6/05)
c.	626-0002-38	Coupler Guard Mount (Not Shown)

Copyright 8/07

MODEL 250 PTO

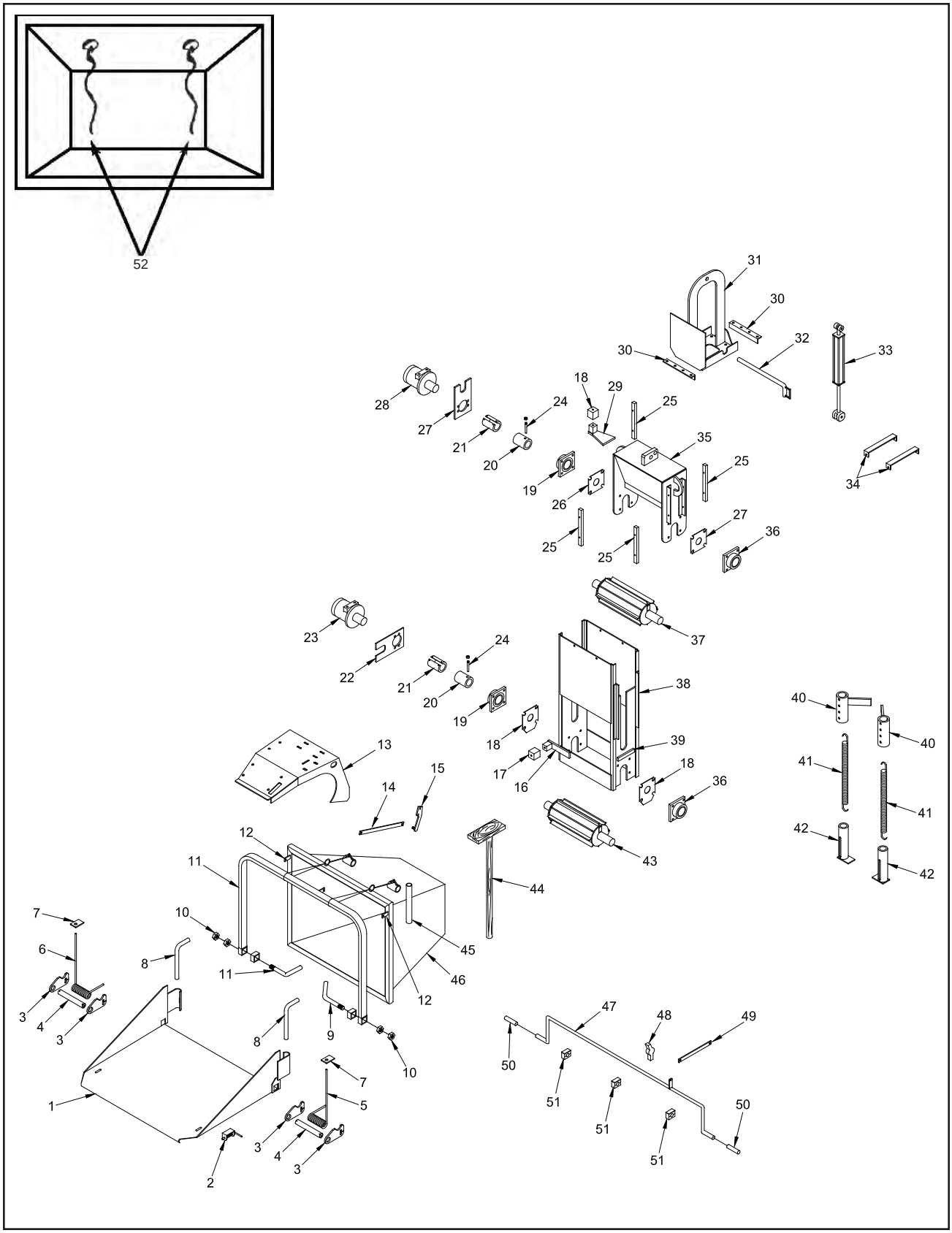

NOTE: Parts may not be exactly as shown.

Bandit

MODEL 250 PTO

LOCATION	PART NUMBER	DESCRIPTION
22 a.	981-300196	Bottom Torque Arm (Start 4/06)
b.	981-1006-43	Bottom Torque Arm (Pre 4/06)
23.	900-3908-67	Bottom Feedwheel Hydraulic Motor
24 a.	900-4909-54	Taper Pin With Nut (Start 6/05)
b.	900-4905-55	Taper Pin Only (Pre 6/05)
25 a.	980-0138-10	Yoke Slide - 1” x 1” x 11 1/2” (Start 4/04)
b.	980-0111-08	Yoke Slide - 3/4” x 1” x 11 1/2” (Pre 4/04)
26 a.	980-300083	Top Feedwheel Bearing Backer Plate (Start 8/04)
b.	980-0114-97	Top Feedwheel Bearing Backer Plate (Pre 8/04)
27 a.	981-300197	Top Torque Arm (Start 4/06)
b.	981-1006-44	Top Torque Arm (Pre 4/06)
28.	900-3908-68	Top Feedwheel Hydraulic Motor
29 a.	981-300199	Top Torque Arm Stop (Start 4/06)
b.	937-300316	Torque Arm Cushion Mount (Start 4/06)
c.	981-1006-71	Top Torque Arm Stop (Pre 4/06)
d.	955-1014-01	Torque Arm Stop Block (Pre 4/06)
30.	955-1005-76	Yoke Lift / Top Plate Angle Mount
31 a.	981-100008	Yoke Lift Assembly (Start 6/05)
b.	981-0501-48	Yoke Lift Assembly (Pre 6/05)
c.	981-300155	Top Yoke Plate Without Yoke Lift (Not Shown)
32 a.	981-300148	Yoke Lock Pin (Start 6/05)
b.	955-1005-80	Yoke Lock Pin (Pre 6/05)
33 a.	900-3925-04	Yoke Lift Cylinder-Welded
b.	900-3903-49	Yoke Lift Cylinder-Tie Rod
c.	904-0007-14	Pin For Welded Cylinder (Not Shown)
d.	900-4913-23	Rubber Washer - Top Of Cylinder (Not Shown)
34.	955-1005-81	Top Yoke Strap (Pre 6/05)
35 a.	981-200073	Top Yoke Assembly (Start 8/04)
b.	981-200058	Top Yoke Assembly (Pre 8/04)
36 a.	900-1909-79	Feedwheel Bearing (Set Screw Style)(Start 8/04)
b.	900-1909-81	Feedwheel Bearing - Debris (Set Screw Style)(Start 8/04)
c.	900-4912-37	Feedwheel Bearing Bolt
d.	900-1900-66	Feedwheel Bearing (Pre 8/04)
e.	900-4900-15	Top Feedwheel Bearing Bolt (Pre 8/04)
f.	900-4900-16	Bottom Feedwheel Bearing Bolt (Pre 8/04)
37 a.	981-200060	Top Feedwheel Assembly
b.	981-300191	Top Feedwheel Tooth
c.	981-0501-31	Top Feedwheel Shaft & Coupler Assembly
38 a.	981-200074	Feedwheel Slide Box Assembly (Start 8/04)
b.	981-200059	Feedwheel Slide Box Assembly (Pre 8/04)
39.	955-1002-45	Yoke Stop Block
40 a.	981-300030	Top Mount for Easy Climb System
b.	900-4905-14	Clevis Pin (Not Shown)
c.	900-4905-19	Hair Pin for Clevis Pin (Not Shown)
41 a.	900-4900-04	Yoke Spring
b.	900-4902-02	Spring Adjuster (Pre 9/99) (Not Shown)

Copyright 8/07

MODEL 250 PTO

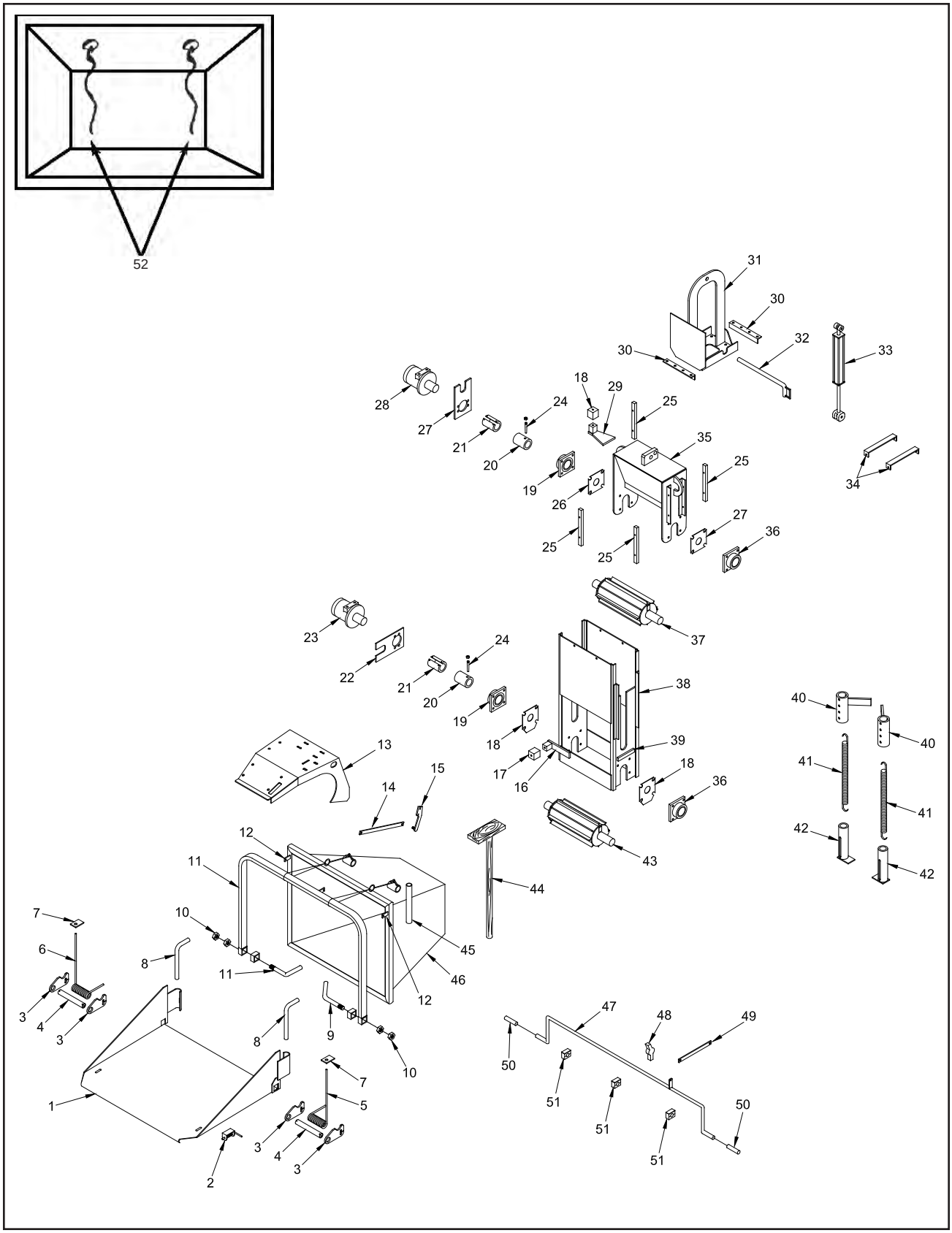

NOTE: Parts may not be exactly as shown.

Bandit

MODEL 250 PTO

LOCATION	PART NUMBER	DESCRIPTION
42 a.	981-300031	Bottom Mount for Easy Climb System
b.	900-4905-79	Clevis Pin (Not Shown)
c.	900-4905-80	Cotter Pin for Clevis Pin (Not Shown)
d.	900-4900-36	Flat Washer (Not Shown)
43 a.	981-200061	Bottom Feedwheel Assembly
b.	981-300191	Bottom Feedwheel Tooth
c.	981-0501-31	Bottom Feedwheel Shaft & Coupler Assembly
44.	981-1005-30	Wooden Push Paddle
45.	980-0122-55	Wooden Push Paddle Mount
46 a.	981-200057	Infeed Hopper Assembly (Start 9/04)
b.	981-200075	Infeed Hopper Assembly (Pre 9/04)
47.	980-300065	Dual Yoke Lift Control Bar
48.	900-3930-96	Short Valve Handle - Lift Cylinder Control Linkage
49.	980-300157	Control Arm - Dual Yoke Lift - 12 1/2”
50.	900-7900-96	Rubber Cap - Dual Yoke Lift Control Bar
51.	900-3914-02	Clamp - Lift Control Bar
52.	980-0508-64	Last Chance Cable Assembly
53.	981-1002-45	Bottom Feedwheel Scrapper Bar (Not Shown)

Copyright 8/07

MODEL 250 PTO

STANDARD LEGS

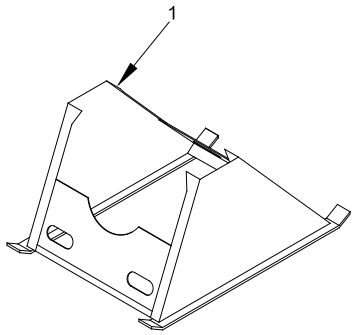

ADJUSTABLE LEGS

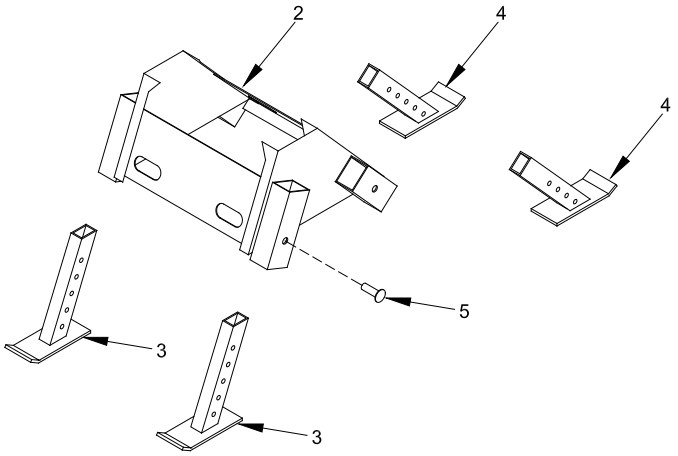

TRAILERIZED

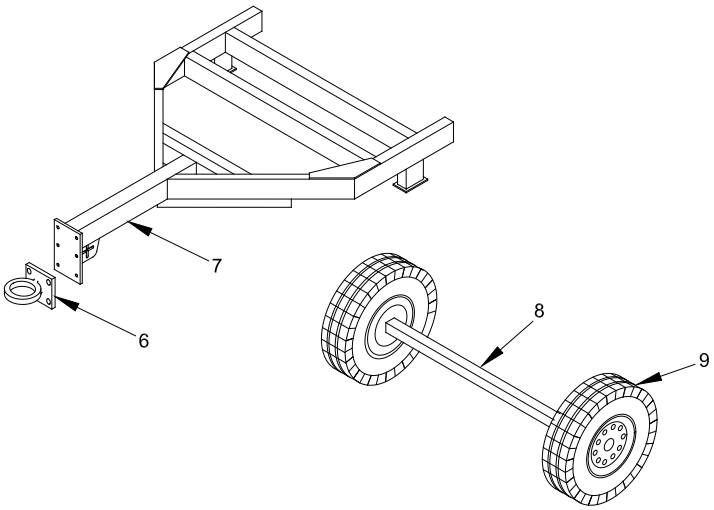

NOTE: Parts may not be exactly as shown.

Copyright 8/07

MODEL 250 PTO

STANDARD LEGS

LOCATION	MODEL 250 PART NUMBER	DESCRIPTION
1.	980-200060	Standard Leg Assembly

ADJUSTABLE LEGS

LOCATION	MODEL 250 PART NUMBER	DESCRIPTION
2.	980-0510-47	Adjustable Leg Assembly
3.	980-200058	Rear Adjustable Legs (3-Point Side)
4.	980-200059	Front Adjustable Legs (Infeed Hopper Side)
5.	980-100012	Pin

TRAILERIZED

LOCATION	MODEL 250 PART NUMBER	DESCRIPTION
6 a.	900-5900-13	2 1/2” Heavy Duty Pintle Ring Hitch
b.	900-5905-73	3” Heavy Duty Pintle Ring Hitch (Not Shown)
c.	980-0505-33	2 5/16” Ball Coupler Assembly (Not Shown)
d.	980-0501-47	2” Ball Coupler Assembly (Not Shown)
e.	980-0507-78	1” Drop Pin Hitch Assembly (Not Shown)
7.	980-0509-47	Frame Assembly
8.	900-5905-04	Axle
9 a.	900-5901-69	185/75R-14” Tire And Black, 5-Bolt Rim
b.	900-5903-08	185/75R-14” Tire Only
c.	900-5901-60	Black, 5-Bolt Rim Only

Copyright 8/07

SERVICE RECORD

DATE	DESCRIPTION	AMOUNT

Copyright 8/07