Owner's Manual

Carlton

PROFESSIONAL
TREE EQUIPMENT

Model SP7015 *TRX*

Machine Serial # _____
Engine Model # _____
Engine Specification # _____
Engine Serial # _____
Purchase Date _____
Dealer _____

Carlton
J. P. Carlton Company
Div. DAF Inc.
121 John Dodd Road
Spartanburg, SC 29303
Ph. (864) 578-9335
Fax (864) 578-0210
www.stumpcutters.com

DIESEL ENGINE EXHAUST WARNING

CALIFORNIA

Proposition 65 Warning

Diesel engine exhaust and some of its constituents are known to the State of California to cause cancer, birth defects, and other reproduction harm.

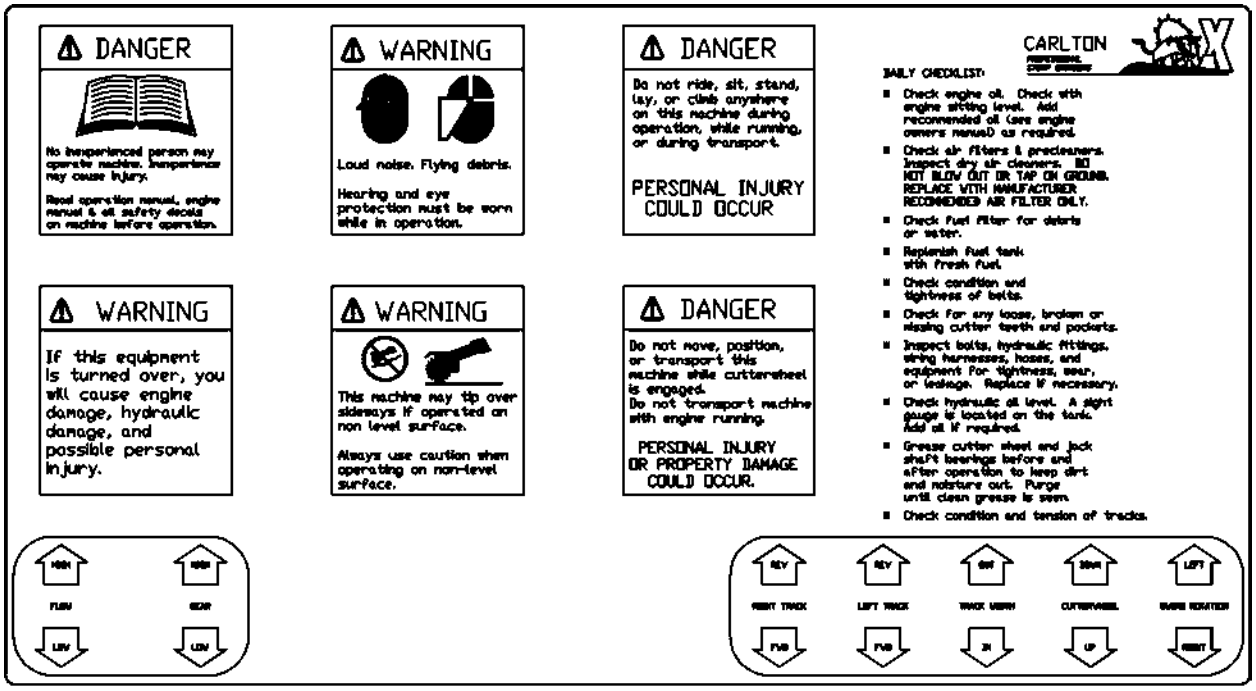
DANGER
No inexperienced person may operate machine. Inexperience may cause injury.
Read operation manual, engine manual & all safety decals on machine before operation.
WARNING
Loud noise. Flying debris.
Hearing and eye protection must be worn while in operation.
DANGER
Do not ride, sit, stand, lay, or climb anywhere on this machine during operation, while running, or during transport.
PERSONAL INJURY COULD OCCUR
CARLTON
DAILY CHECKLIST:
Check engine oil. Check with engine sitting level. Add recommended oil (see engine owners manual) as required.
Check air filters & precleaners. Inspect dry air cleaners. DO NOT BLOW OUT OR TAP ON GROUND. REPLACE WITH MANUFACTURER RECOMMENDED AIR FILTER ONLY.
Check fuel filter for debris or water.
Replenish fuel tank with fresh fuel.
Check condition and tightness of belts.
Check for any loose, broken or missing cutter teeth and pockets.
Inspect bolts, hydraulic fittings, wiring harnesses, hoses, and equipment for tightness, wear, or leakage. Replace if necessary.
Check hydraulic oil level. A sight gauge is located on the tank. Add oil if required.
Grease cutter wheel and jack shaft bearings before and after operation to keep dirt and moisture out. Purge until clean grease is seen.
Check condition and tension of tracks.
WARNING
If this equipment is turned over, you will cause engine damage, hydraulic damage, and possible personal injury.
WARNING
This machine may tip over sideways if operated on non level surface.
Always use caution when operating on non-level surface.
DANGER
Do not move, position, or transport this machine while cutterwheel is engaged.
Do not transport machine with engine running.
PERSONAL INJURY OR PROPERTY DAMAGE COULD OCCUR.

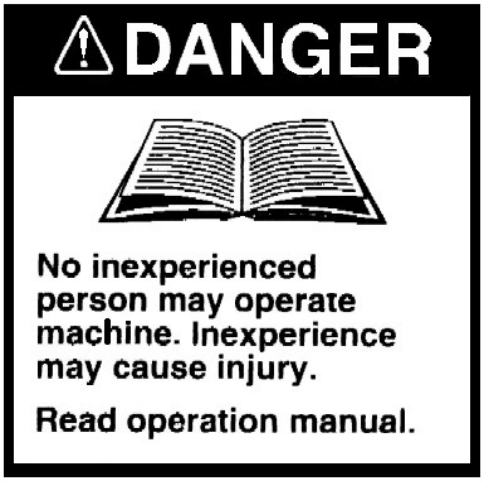
DANGER
No inexperienced person may operate machine. Inexperience may cause injury.
Read operation manual.

WARNING
Loud noise. Flying debris.
Hearing and eye protection must be worn while in operation.

WARNING
This machine may tip over sideways if operated on non-level surface.
Always use caution when operating on non-level surface.

WARNING
IF THIS EQUIPMENT IS TURNED OVER, YOU WILL CAUSE ENGINE DAMAGE, HYDRAULIC DAMAGE, AND POSSIBLE PERSONAL INJURY.
JPC38

⚠ DANGER

Do not move, position, or transport this machine while cutterwheel is engaged.
Do not transport machine with engine running.

PERSONAL INJURY OR PROPERTY DAMAGE COULD OCCUR.

⚠ DANGER

Do not ride, sit, stand, lay, or climb anywhere on this machine during operation, while running, or during transport.

PERSONAL INJURY COULD OCCUR

⚠ DANGER

Stay clear while machine is in operation.

Cutter wheel will cause severe injury or death.

JPC27

⚠ DANGER

Pinch Points

Keep body parts away while in operation.

JPC09

⚠ WARNING (AVISO) (AVERTISSEMENT)

TO PREVENT SERIOUS INJURY OR DEATH FROM MOVING PARTS:
* KEEP HANDS, FEET, AND CLOTHING AWAY FROM MOVING PARTS.
* CLOSE ALL GUARDS AND SHIELDS BEFORE OPERATING MACHINERY.

PARA EVITAR LA LESION O LA MUERTE:
* MANTENGANSE A DISTANCIA LAS MANOS, LOS PIES Y LA ROPA DE LAS PARTES MOVIMIENTOS DE LA MAQUINA.
* CIERRAN TODAS LAS PROTECTORAS QUE HAY ANTES QUE HAGAN FUNCIONAR.

AFIN D'ÉVITER TOUTE BLESSURE GRAVE OU LA MORT:
* NE PAS RAPPROCHER LES MAINS, LES PIEDS OU LES VÊTEMENTS DES PIÈCES MOBILES.
* S'ASSURER QUE TOUTES LES PIÈCES DE PROTECTION SONT EN PLACE AVANT DE METTRE EN MARCHE LA MACHINERIE.

⚠ WARNING (AVERTISSEMENT) (AVISO)

- THREAD FULLY
- TIGHTEN NUT

- ENROSCAR COMPLETAMENTE
- APRETAR TUERCA

- VISSER À FOND
- SERRER L'ÉCROU

⚠ WARNING

KEEP AWAY FROM PRESSURIZED LEAKS

Pressurized leaks are not always visible. Check for pressurized leaks using cardboard or wood. Never use a finger, hand or other body part to check for leaks.

Injuries from pressurized leaks penetrating the skin will lead to serious health problems or death. CONSULT A PHYSICIAN IMMEDIATELY IF PENETRATION OCCURS, SURGICAL REMOVAL REQUIRED.

Release pressure from line before loosening, removing or replacing any hydraulic hoses or equipment.

0700317

⚠ WARNING

FLAMMABLE FUEL

THIS MACHINE USES DIESEL FUEL AND HYDRAULIC OIL.

NEVER FILL TANK WHILE ENGINE IS HOT, RUNNING, OR IN A CONFINED AREA. DANGER OF FIRE OR EXPLOSION EXIST.

LEAVE ROOM IN THE TANK FOR EXPANSION FROM HEAT - NEVER FILL TANK COMPLETELY FULL.

KEEP MACHINE AWAY FROM FIRE, SPARKS, AND OTHER SOURCES OF IGNITION DURING USE AND STORAGE.

NEVER PUT MACHINE IN STORAGE WITH FUEL IN THE TANK.

ALWAYS STORE FUEL IN APPROVED (RED) CONTAINERS AND AWAY FROM SOURCES OF IGNITION.

0700316

⚠ WARNING

SEVERE ENGINE DAMAGE **WILL** OCCUR IF THIS ENGINE IS OPERATED AT AN ANGLE GREATER THAN 25°

PROPER ENGINE OIL LEVEL MUST BE MAINTAINED TO ACHIEVE MAXIMUM ANGLE OF OPERATION OF 25°
(SEE ENGINE OWNER'S MANUAL FOR PROPER OIL LEVEL)

0700075A

⚠ WARNING

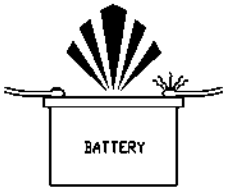

USE CAUTION IN EXTREME COLD! FROZEN BATTERY WILL EXPLODE!

NEVER JUMP START A BATTERY IN FREEZING TEMPERATURES. INSPECT BATTERY FOR SIGNS OF FROST BEFORE STARTING IN EXTREME COLD. MOVE EQUIPMENT TO A HEATED, WELL VENTILATED AREA TO ALLOW BATTERY TO THAW BUT NOT NEAR FIRE, SPARKS, OR OTHER SOURCES OF IGNITION.

BATTERY FUMES ARE EXPLOSIVE. NEVER USE JUMPER CABLES OR RECHARGE BATTERY UNLESS IN AN OPEN OR WELL VENTILATED AREA AND AWAY FROM ALL SOURCES OF IGNITION.
BATTERY ACID CAN CAUSE SEVERE BURNS. KEEP AWAY FROM EYES, SKIN, AND CLOTHING.
ALWAYS REMOVE BATTERY BEFORE WELDING ON EQUIPMENT. FOLLOW PROCEDURES FOR WELDING AND GROUNDING BEFORE STARTING TO WELD ON THIS MACHINE OR EQUIPMENT DAMAGE AND POSSIBLY SEVERE PERSONAL INJURY WILL OCCUR.

0700314

⚠ CAUTION

DO NOT OVER-TENSION TRACKS!!

TOO MUCH TRACK TENSION CAN CAUSE TRACK DAMAGE, BEARING DAMAGE, AND/OR FRAME DAMAGE.

THE CORRECT SAG DISTANCE BETWEEN THE TRACK AND THE ROLLER IS 1", MEASURED AT THE CENTER ROLLER. SEE PICTURED ILLUSTRAION IN OWNERS' MANUAL MACHINE MAINTENANCE SECTION FOR TRACK TENSIONING.

JPC070001_A

NOTICE

Premature engine failure could occur without proper maintenance of outboard bearing. See manual for further information.

JPC

NOTICE

DECALS SHOULD BE PROPERLY MAINTAINED AND REPLACED. IT IS THE DUTY OF THE OWNER OF THIS EQUIPMENT TO KEEP DECALS IN GOOD CONDITION.

REPLACEMENT DECALS MAY BE PURCHASED FROM J. P. CARLTON CO.

0700309

NOTICE

SERVICING BELTS AND BEARINGS

ALWAYS TURN OFF ENGINE AND REMOVE KEY BEFORE SERVICING! ALLOW ALL PARTS TO COME TO A COMPLETE STOP AND COOL BEFORE TOUCHING!

- New belts stretch and get loose. After 2 hours of operation, check tension and tighten belts.
- Check tension and retighten every 4 hours of operation until tension stays consistent.
- See manual for instruction and proper tension.
- Thereafter, check belt tension every month until belts need replacing.

AT LEAST ONCE A MONTH:

- CHECK AND TIGHTEN BOLTS AND LOCK SETSCREWS ON ALL BEARINGS.
- CHECK AND TIGHTEN SCREWS ON ALL BELT PULLEY BUSHINGS.

REFER TO MAINTENANCE SECTION

0700311

STUMP GRINDER LIMITED WARRANTY

J.P. Carlton Co. Inc., hereafter referred to as the "Manufacturer", warrants each new Carlton Grinder to be free of defects in workmanship and material for a period of one year.

This warranty takes effect upon delivery to the original retail purchaser. The manufacturer, at its option, will replace or repair, at a point designated by the manufacturer, any parts which appear to have been defective in material or workmanship. The manufacturer is not responsible for consequential damages.

This warranty will not apply if the grinder is not operated in a manner recommended by the manufacturer. The following examples would void warranty:

1. The grinder has been abused.
2. The machine is involved in or damaged by an accident.
3. Repairs or attempted repairs were made without prior written authorization.
4. Including but not limited to repairs made due to normal wear.

The owner is responsible for all regular maintenance as explained in the operators' manual. Neglect in regular maintenance or failure to replace normal wear items such as teeth, pockets, lubrication oils, filters, belts, bearings, etc. may void warranty.

This warranty is expressly in lieu of any other warranties, expressed or implied, including any implied warranty or merchantability of fitness for a particular purpose and of any non-contractual liabilities including product liabilities based upon negligence or strict liability. J.P. Carlton Co. Inc. will not be liable for consequential damages resulting from breach of warranty.

IT IS NECESSARY TO RETURN THE WARRANTY VALIDATION FORM AND NOTIFY J.P. CARLTON CO. INC. IN WRITING WITHIN TEN (10) DAYS FROM DELIVERY DATE TO VALIDATE THIS WARRANTY.

NOTE: This warranty applies only to new and unused equipment or parts thereof manufactured by J.P. Carlton Co. Inc. ANY MACHINES USED FOR LEASE OR RENTAL - WARRANTY IS LIMITED TO 90 DAYS FROM FIRST DAY OF INITIAL SERVICE.

NOTICE: All power units and associated components are *NOT* warranted by J.P. Carlton Co. Inc. or their dealers. It is the customers' responsibility to return machine to the local engine distributor.

INFORMATION PHONE NUMBERS TO FIND YOUR LOCAL ENGINE & PARTS SERVICE CENTERS:
Honda ..... 1-770-497-6400 (GA-Eastern Time Zone)
Kohler Engines..... 1-800-544-2444 (Toll Free)
Briggs & Stratton Engines..... 1-800-233-3723 (Toll Free)
Lombardini ..... 1-770-623-3554 (GA-Eastern Time Zone)
Deutz Engines..... 1-800-241-9886 (Toll Free)
John Deere Engines ..... 1-800-533-6446 (Toll Free)
Caterpillar ..... 1-877-636-7658 (Toll Free)
Kubota ..... 1-847-955-2500 (IL-Central Time Zone)
Kawasaki Engines..... 1-616-949-6500 (MI-Eastern Time Zone)
Wisconsin Engines ..... 1-800-932-2858 (Toll Free)
Onan Engine ..... 1-800-888-6626 (Toll Free)

In order to process any warranty claims, it is the owners' responsibility to report claims promptly to us or our authorized dealer from whom the equipment was purchased. It is necessary to include the following information on any and all request for warranty:

1. Dealer from whom purchased
2. Date of delivery
3. Serial number of unit
4. Model number of unit
5. Engine make and serial number
6. Length of time in use
7. Date of failure
8. Nature of failure

EXPLANATION OF LIMITED WARRANTY

The manufacturer will not reimburse the customer or dealer labor cost incurred for installing “bolt-on” or “slip-on” items, such as pumps and motors, bearings, belts, pulleys, etc. The manufacturer will provide replacement parts at no cost to the customer for defective parts during the warranty period. Defective parts must be returned to J.P. Carlton Company. It will be the customers’ responsibility to install the replacement parts unless arrangements are made with the selling dealer.

The manufacturer will not reimburse travel cost to servicing dealer. It is the customers’ responsibility to deliver machine to dealers facility, unless other arrangements have been agreed to between the selling dealer and the customer.

The manufacturer may elect, at its discretion, to reimburse reasonable labor cost to customer or dealer for major defect repairs. Prior approval must be obtained from J.P. Carlton Company Inc.

IMPORTANT NOTICE

1. **AIR FILTER MAINTENANCE IS CRITICAL ON STUMP GRINDING MACHINES. DIRT INGESTION WILL NOT BE WARRANTED BY THE ENGINE MANUFACTURER OR J.P. CARLTON COMPANY.**

2. **OIL AND OIL FILTER MAINTENANCE AND STAYING WITHIN THE LIMITS OF THE ANGLE OF OPERATION IS ALSO CRITICAL ON STUMP GRINDING MACHINES. STARVING THE ENGINE FOR OIL WILL NOT BE WARRANTED BY THE ENGINE MANUFACTURER OR J.P. CARLTON COMPANY.**

3. **FAILURE TO MAINTAIN OUTBOARD BEARING CAN CAUSE ENGINE FAILURE.**

Warranty Validation Form

Congratulations on your purchase of a Carlton Stump Grinder. This product has been designed and manufactured to provide years of profitable service while minimizing maintenance and downtime. Please take the time now to complete this warranty validation form. This information is necessary for Carlton to instate your warranty.

Return Form To: J.P. Carlton Company, Div. D.A.F. Inc.
121 John Dodd Road
Spartanburg, SC 29303
Phone: 1-864-578-9335

Purchaser Information:

Company Name:_____ Street Address:_____
City:_____ State:_____ Zip Code:_____
Telephone:_____Contact:_____

Machine Information:

Model Number :_____ Engine Model :_____
Serial Number :_____ Serial Number :_____

Dealer Information:

Dealer Name:_____ Street Address:_____
City: _____ State:_____ Zip Code:_____
Contact Name: _____

1. _____ Customer has been instructed on operation and safety aspects of operating the equipment.
2. _____ Customer has been advised not to reach into cutter wheel area.
3. _____ Customer has been advised to stop machine and remove key before performing any type of maintenance.
4. _____ Customer has been warned not to operate the machine without the cutter wheel guard in place.
5. _____ Customer has been furnished with all parts and operators manuals.
6. _____ Customer has been instructed on equipment maintenance schedules and procedures.
7. _____ Customer has been advise that the engine or power unit that is used on this machine is warranted by the engine manufacturer and ***NOT*** **J.P. Carlton Company.** All engine warranty issues should be addressed to the local engine dealer.
8. _____ Customer understands the importance of air and oil filter maintenance, and the importance of staying within the angle of operation of the engine. If either of these is not adhered to, the engine warranty is ***VOID***.
9. _____ Customer understands to keep locking collars tight and purge bearings with grease.
10. _____ All operation and warning decals are properly displayed on equipment.
11. _____ Customer understands it is his responsibility to train all operators on operator safety.

I have inspected this equipment and find it in good working condition. To the best of my knowledge, the customer and his personnel are aware of the above procedures.

Date: _____ Signed: _____
Dealer Representative

The equipment has been thoroughly checked by the above named dealer representative, and I am satisfied with his instructions.

Date: _____ Signed: _____
Purchaser

TABLE OF CONTENTS

INTRODUCTION

FOREWORD 1

GENERAL INFORMATION 2

MACHINE FEATURES 3

MACHINE SPECIFICATIONS 4

OPERATION

SAFETY PRECAUTIONS 6

DAILY CHECKLIST 10

MACHINE CONTROLS 11

TRANSPORTING 18

MACHINE OPERATION 20

MAINTENANCE

MACHINE MAINTENANCE 24

LUBRICATION CHART 29

TROUBLESHOOTING GUIDE 30

SERVICING BELTS 32

SERVICING BEARINGS 38

SERVICING CUTTER WHEEL 40

SERVICING HYDRAULICS 45

SERVICING STUB SHAFT 48

WIRING DIAGRAM 53

PARTS

TURNTABLE ASSEMBLY 54

ENGINE SLIDE ASSEMBLY 55

ENGINE BELT ASSEMBLY 57

JACK SHAFT ASSEMBLY 59

POLY CHAIN® ASSEMBLY 60

CUTTER WHEEL ASSEMBLY 61

CHIP GUARD ASSEMBLY 63

TRACK ASSEMBLY 64

BACK

RADIO CONTROL MANUAL

Congratulations on your purchase of a new Carlton® Professional Stump Grinder! Carlton® Stump Grinders have a reputation for superior performance and reliability. A machine is not profitable if it's broken-down and we do our absolute *best* to help you avoid costly downtime. Each and every machine has been *over* designed and overbuilt to ensure years and years of trouble-free operation. In this, we take pride.

The Carlton® Model SP7015 *TRX* machine is designed for use in unique situations where size and maneuverability are foremost. As a result, the Model SP7015 *TRX* has it's own unique operational requirements.

Read this manual carefully and **TAKE RESPONSIBILITY** for thoroughly familiarizing yourself with the controls and the concepts behind the operation of this machine before attempting to operate it. Slowly experiment with the controls and gradually work yourself up to the full capabilities of this machine. The Carlton® Model SP7015 *TRX* is a durable and profitable professional stump grinder. Read this manual. Use proper safety precautions. Follow the instructions provided and use common sense and your "OX" will perform like its namesake. If getting more work done in a day, with less trouble, is your idea of good business, then you'll *love* your new Carlton® Stump Grinder!

We welcome your suggestions on how we might better build our machines. We solicit any and all questions concerning the safe operation or proper servicing of your new stump grinder.

Please feel free to write to us with any comments.
We'll enjoy hearing from you!

The J. P. Carlton Company constantly strives to create the best equipment available in the stump cutting industry. Therefore, the material in this manual is correct at the time of publication. Carlton® reserves the right to make improvements, modifications and even discontinue features, as we deem necessary to meet our goal. Carlton® also reserves the right to discontinue models without any prior notification or obligation.

Inspect your new Carlton® Stump Grinder as soon as you receive it. Any damages incurred during shipment are not warranted and therefore not covered repairs. You should have the truck driver verify or acknowledge any damages caused during shipment. If not, contact the truck lines as soon as possible with your complaint.

Any reference made to right, left, front or rear in relationship to the stump cutter is illustrated in the following picture. Please refer to these any time you call your dealer or J. P. Carlton Company for parts or assistance.

- Diesel Power
- Direct drive hydraulic pump
- Hydraulic motor propulsion
- Hydraulic controls
- Wireless remote control box (Optional Tether Backup Available)
- Large hydraulic tank
- Hydraulic and fuel filters
- Safety valves permit unaffected operation uphill, downhill or level
- Heavy construction
- Counterbalancing valve
- Dual swing cylinders
- Hour meter
- Hardened bushings in rotating cylinders
- Hydraulic Steering
- Tapered roller bearings on cutter wheel & jackshaft
- 1” thick Blanchard ground cutter wheel
- 32 carbide tipped cutter teeth
- Poly Chain® to cutter wheel
- Easy engine belt adjustment
- 35” width to clear narrow fence gates
- Tracks hydraulically expand from 35” to 48”
- Double wire braid hose & hydraulic lines
- Safety tie down loops
- Epoxy primer
- Dupont Imron® protective finish
- Key start
- High capacity battery
- Heavy-duty rubber and metal chip guards

We Pride Ourselves
in the strength and quality of each and every machine

Engine	Deutz 60 HP Turbo Diesel
Weight	4300 Lbs
Length	10’ 6”
Height	57”
Machine Width	
Track Width Retracted	35”
Track Width Extended	48”
Track Dimension	9 1/2” x 75” Long
Controls	Wireless Remote Optional Tether Backup Available
Cutting Depth Below Ground	15”
Cutting Height Above Ground	43”
Cutter head Swing	70” arc
Number of Teeth on Cutter Wheel	32
Cutter Wheel Diameter w/Teeth	26 1/2”
Cutter Wheel Thickness	1” Blanchard Ground
Engine Belt Size	4 Band 4B105
Cutter Wheel Belt Size	14M-2100-68
Cutter Wheel Bearing Size	2”
Jack Shaft Bearing	1 11/16”
Boom Bearing Size	2 15/16”
Swing Bearing	20” Kaydon Table Bearing Rated at 102,000 ft. lbs.
Engine Stub Shaft Bearing	1 3/4”
Fuel Tank Capacity	9.6 Gallons
Hydraulic Tank Capacity	9 Gallons

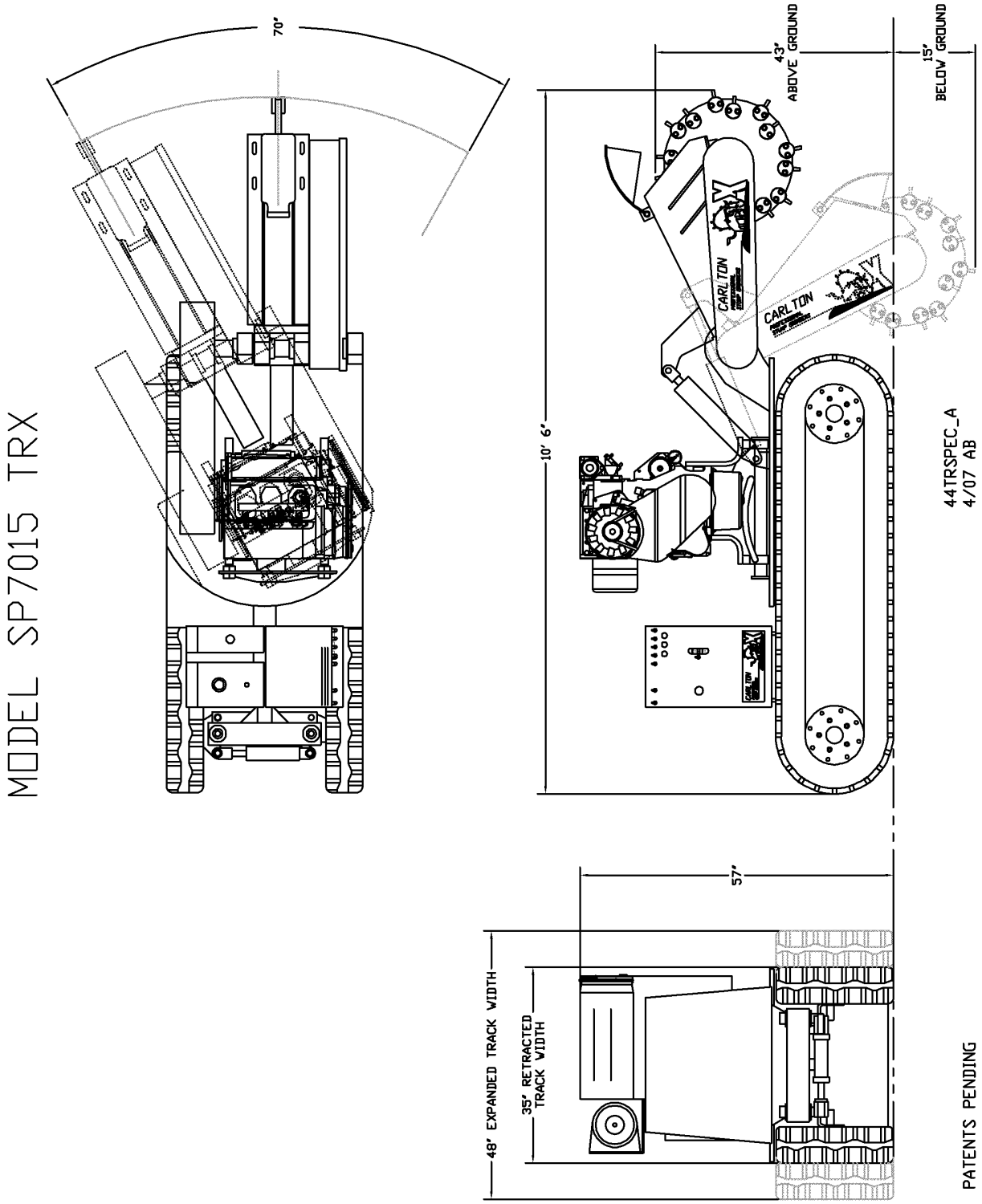
MODEL SP7015 TRX
70"
10' 6"
43" ABOVE GROUND
15" BELOW GROUND
CARLTON
CARLTON
44TRSPEC_A
4/07 AB
57"
48" EXPANDED TRACK WIDTH
35" RETRACTED TRACK WIDTH
PATENTS PENDING

Before operating the stump cutter, read this manual, the engine manual, and all the safety decals on the machine. Know all parts of the machine and their functions, especially the shut down procedures in case of emergency. No inexperienced person may operate machine. Inexperience may cause injury.

SAFETY FIRST ALWAYS!

This is the **Safety-Alert Symbol**. This symbol is placed on the machine and in the manual to alert the operator to the potential for bodily injury or death. The operator should pay close attention to the instructions whenever they see this symbol.

The **Safety-Alert Symbol** will be accompanied by one of the following words:
DANGER, WARNING, or CAUTION

- A **DANGER** symbol means that if the instructions are not followed the possibility of serious personal injury or death is probable.
- A **WARNING** symbol means that if the instructions are not followed there is a possibility of serious personal injury or death.
- A **CAUTION** symbol means there is an unsafe condition or practice that may cause personal injury or property damage.

PERSONAL PROTECTION:

- Wear face shield and hearing protection
- Do not wear loose-fitting clothing
- Tie back long hair
- Do not wear jewelry
- Keep clear of cutter wheel
- Keep away from moving parts
- Only operate in a well ventilated area because of carbon monoxide

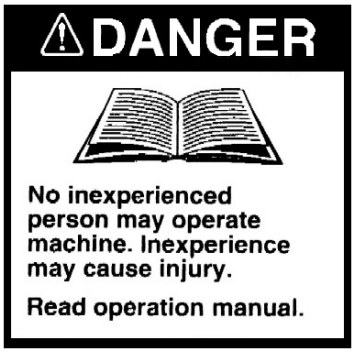

P/N 0700008

P/N 0700010

P/N 0700027

Be Safe and Practice Safe Operation using the following guidelines.

⚠ DANGER

- Any individual operating this machine must first read and understand this manual, the engine manual and all safety decals on machine.
- DO NOT permit children to operate machinery or to play near machinery during operation.
- Always wear face shield and hearing protection during operation. Loud noise and flying debris may cause severe injury.
- Keep hands, feet, legs, clothing, hair and all other body parts away from cutter wheel and other moving machine parts to eliminate the possibility of injury.
- Shut down machine completely and remove key before removing debris from work area (i.e. clearing rocks, wood chips, etc.).
- DO NOT modify or change any part without written approval from J. P. Carlton Company.
- Do not ride, sit, stand, lay or climb anywhere on this machine during operation, while running, or during transport.
- Do not move, position, or transport this machine while cutter wheel is engaged.

⚠ WARNING

- Do not refill fuel tank while engine is hot, running, or indoors. Danger of fire or explosion exists.
- Fuel and its vapors are highly flammable and explosive. **Handle with care**. Only use approved (red) fuel containers for storage.
- Do not store fuel containers near any open flames, sparks or other sources of ignition.
- Do not store equipment with fuel in the tank.

- Battery fumes are explosive. Recharge battery in an open area away from fire, sparks, or other sources of ignition.
- Battery acid can cause severe burns. Keep away from eyes, skin, and clothing.
- Always remove battery before welding on equipment.

⚠ WARNING

- **DO NOT OPERATE THE ENGINE AT AN ANGLE GREATER THAN 25° OR SEVERE ENGINE DAMAGE WILL OCCUR.** PROPER ENGINE OIL LEVEL MUST BE MAINTAINED TO ACHIEVE MAXIMUM ANGLE OF OPERATION OF 25°. (See Engine Owner's Manual for proper oil level.)

⚠ WARNING

- Never allow spectators to stand and watch machine in operation without proper hearing and eye protection and standing at a safe distance. Loud noise and flying debris may cause severe injury.
- Do not operate around water, gas, power or phone lines. Check with property owner or call utilities if not sure.
- Avoid fences and clear away other objects (i.e. sticks, stones, metal, etc.).
- Be aware of the possibility of foreign objects imbedded in or buried around the stump. Do not cut crosswise of roots above ground to prevent roots being thrown.
- If unusual vibration occurs, stop engine immediately and correct problem before continuing operation.
- Keep all guards in place and properly secured during operation.
- Keep all safety devices working properly and all other machine parts in good working condition.
- Never leave the controls unattended while in operation. Be sure machine is not capable of operation when left unattended.

⚠ WARNING

- Stop engine and remove key when repairing or adjusting machine or drive belts.
- Keep engine in good condition service as instructed in engine manual.
- Do not touch engine while running or hot (serious burns may result).
- Allow all machine parts to cool sufficiently before servicing or making adjustments. Hot machine parts can cause severe burns.

⚠ WARNING

- Do not run the machine without a complete number of teeth in the cutter wheel tightened to the correct torque.
- Park machine on level surfaces only. Lower cutter head to the ground and use wheel chocks to prevent unattended movement.

⚠ CAUTION

- Do not operate stump cutter in dark, dim lit, or concealed areas.
- Keep machine clean and clear of debris to eliminate fire hazard.
- Keep cutter wheel skirt guards in good condition to help control chips during grinding.
- Keep safety and instructional decals clean and replace any that are damaged, difficult to read, or missing.

ATTENTION:
The Carlton® Model SP7015 *TRX* Stump Grinder **CAN** be overturned on steep inclines. This can cause serious injury to operator and machine. **DO NOT OVERTURN!**

P/N 0700024

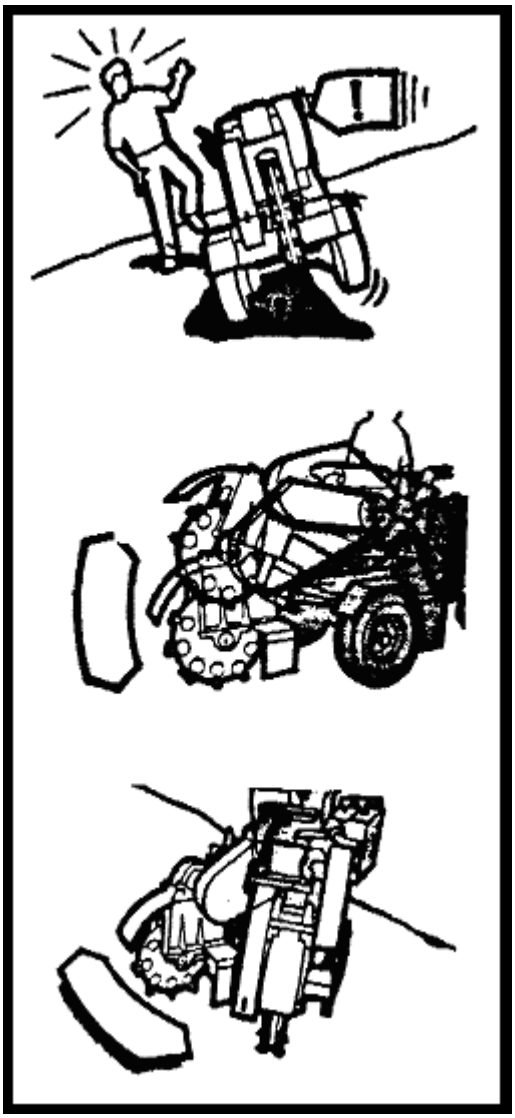

- Avoid steep side inclines when operating this machine! The narrow design width required in operating the model SP7015 *TRX* in tight confines makes it susceptible to tipping over sideways. Overturning this machine can result in personal injury, property damage and/or seizing the engine.
  USE CAUTION.

- Positioning the **cutter wheel uphill** and as close to the ground as possible while in transit will minimize the danger of tipping over and maximize the steadiness of the model SP7015 *TRX*.

- When encountering a hill, the best approach is straight up or straight down. Avoid any side angles whenever possible.
  NEVER ALLOW INEXPERIENCED PERSONS TO OPERATE THIS MACHINE.

DAILY CHECKS SHOULD BE PERFORMED BEFORE STARTING THE ENGINE FOR THE DAY. **DO NOT** INSERT KEY INTO ENGINE UNTIL ALL CHECKS HAVE BEEN COMPLETED.

- Check engine oil at dipstick. **Engine must be level.** Boom in raised position will not affect the engine position; machine must be on level ground. Add recommended oil, as required. **(See Engine Owners' Manual.)**
- Check fuel filter for debris or water.
- Replenish fuel tank with fresh fuel.
- Check condition and tightness of drive belts. (See Servicing Belts section) New belts will stretch and become loose as machine runs. Check belt tension often when belts are new.
- Check for any loose, broken or missing teeth and pockets.
- Inspect bolts, hydraulic fittings, wiring harnesses, hoses, and equipment for tightness, wear, or leakage. Replace if necessary.
- Inspect dry air filters. REPLACE, if necessary, WITH FACTORY AIR FILTER ONLY (see Maintenance Section for part numbers). Do not blow out or tap on ground. Follow engine manual procedure for removal and replacement. Because of the environment of a stump grinder, air filters need to be inspected and replaced more often than the engine manufacturer recommends.
- Replace inner safety filter when dirty or when the outer air filter has been changed 3 times. Do not blow out the inner safety filter or tap on ground. Do not allow dirt to get into engine when removing filters. Dirt ingestion will cause engine failure and is not warranted.
- Check hydraulic oil level. A sight glass is located on the tank. Add oil if required. Do not fill tank full, the oil will expand and spill out in hot climates.
- Grease jackshaft and boom bearings daily, apply only 2 to 4 shots of grease. Do not over grease.
- Cutter wheel shaft bearings must be purged with grease daily. Purge until clean grease is seen.
- Check the condition of the tracks and adjust tension if necessary (see Maintenance section).

ENGINE SITTING LEVEL

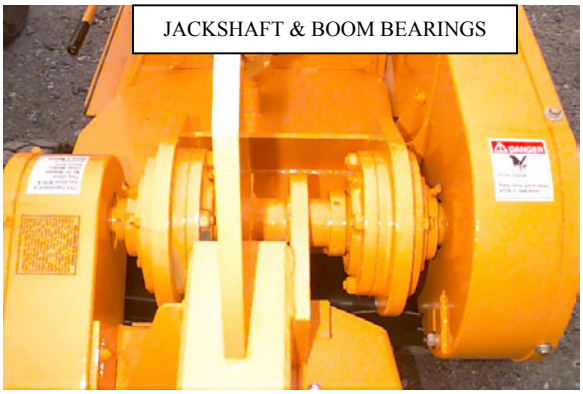

JACKSHAFT & BOOM BEARINGS

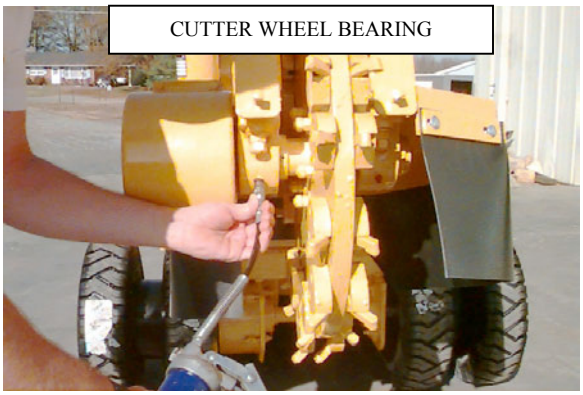

CUTTER WHEEL BEARING

ENGINE CONTROLS – Refer to the engine manufacturers owners' manual for controls, operation, and service.

- THE CUTTER WHEEL MUST BE DISENGAGED BEFORE STARTING THE MACHINE.
- The SP7015 *TRX* stump grinder is a radio control machine. To start the engine and radio control transmitter, follow these instructions.
- On the machine, turn the ignition key switch to ON, the machine switch to **Remote On,** and make sure the flow and gear switches are in the LOW position.
- On the transmitter, press the **E-STOP** button down.
- Toggle any switch on the transmitter.
- Twist the **E-STOP** button clockwise to release. Release the E-STOP button within 10 seconds to power up or the unit will power down. When the transmitter is operating there is a yellow light that will be flashing, the light is indicated in the picture at the right. (Read the radio control manual for more information on the meaning of different lights and colors.) If the transmitter doesn't start, check the transmitter for stuck switches; it will not start with a switch in the ON position.
- Now start the engine, turn the key switch while pressing the by-pass switch to start the machine. If the engine doesn't start right away and you have to restart it, turn the key switch OFF and back ON. Make sure the light on the transmitter is still on, and restart the engine by turning the key and pressing the by-pass switch. If you lose the connection (light off), repeat the procedure from the beginning and perform each step exactly as described. Test controls for proper operation.

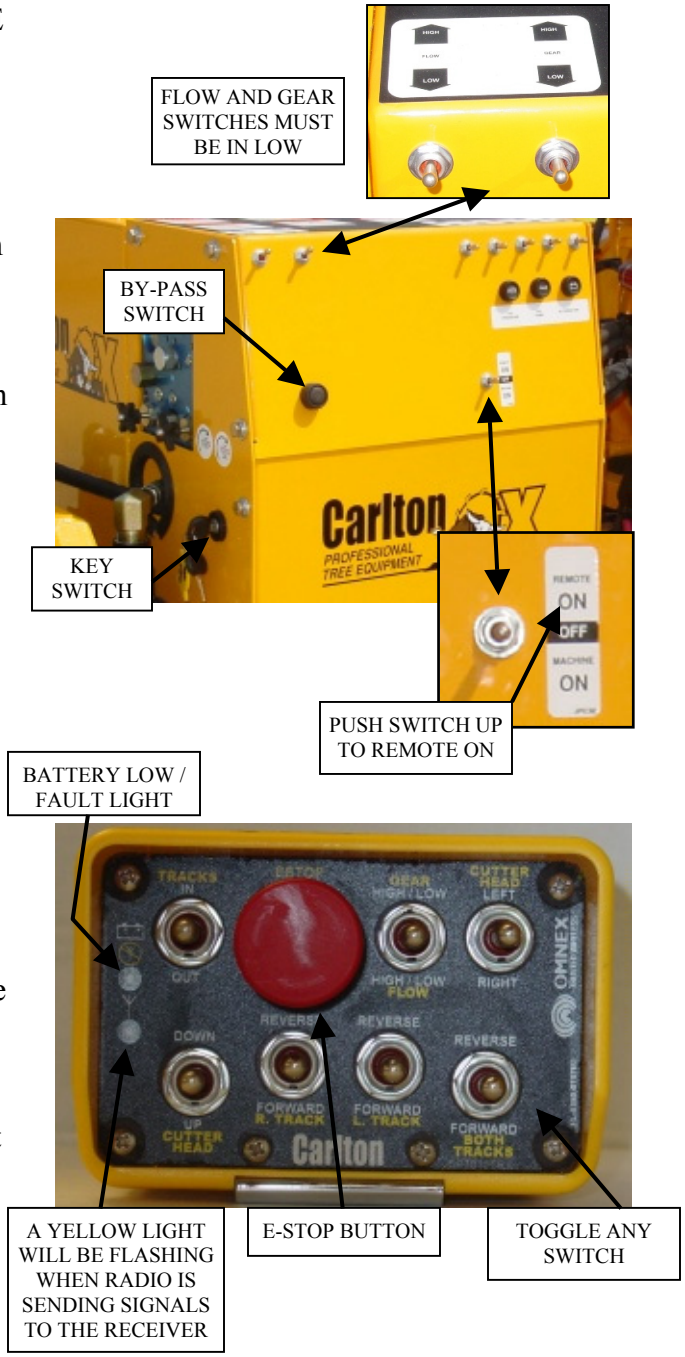

DO NOT OPERATE THE ENGINE AT AN ANGLE GREATER THAN 25° OR SEVERE ENGINE DAMAGE WILL OCCUR. PROPER ENGINE OIL LEVEL MUST BE MAINTAINED TO ACHIEVE MAXIMUM ANGLE OF OPERATION OF 25°. (See Engine Owner's Manual for proper oil level.)

NEVER WELD ON A MACHINE WITH RADIO CONTROLS WITHOUT FIRST DISCONNECTING THE RECEIVER WIRE HARNESS, OTHERWISE THE RADIO RECEIVER WILL BE DESTROYED.

- Use the radio transmitter to operate the machine when positioning the machine at the job site and when grinding the stumps. The five operation and positioning functions operate the same on the machine as on the radio transmitter. The radio transmitter has a sixth control switch that will move both of the tracks at the same time in the forward or reverse directions only. There is also a switch to control the Gear and Flow on the radio transmitter. See Hydraulic Controls listed in this section for more information.
- The E-STOP button turns off the transmitter and the machine when it is pressed down.

- To run the machine by the toggle switches, put the machine switch in the **Machine On** position and turn the key switch while pressing the by-pass switch to start. The machine-mounted controls can now be operated but not the radio control.
- The machine-mounted controls are toggle switches and automatically go back to the off position in the middle when released. These switches can be used for short-term operation to position the machine or to test the operation of the functions. DO NOT GRIND STUMPS USING THE MACHINE MOUNTED CONTROLS, INJURY COULD OCCUR.

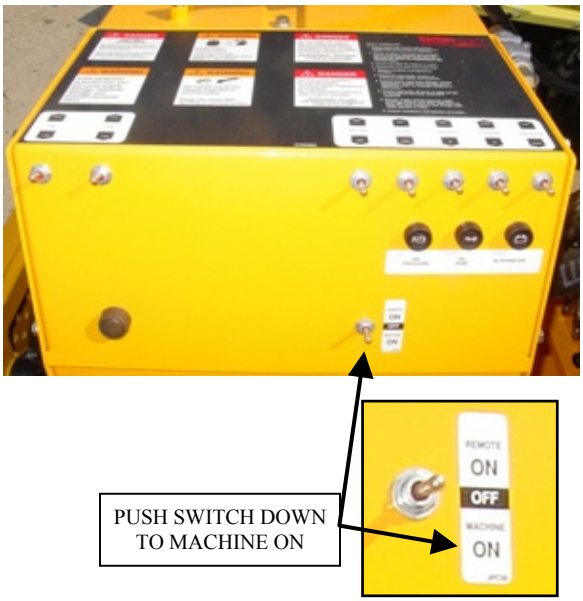

HYDRAULIC CONTROLS

- A series of hydraulic controls are located on the machine and radio transmitter, which are clearly marked for use. There are five operating and positioning functions on the machine and radio transmitter. To operate push the toggle switch in the direction of the command you want to perform, such as Right Track Reverse push the switch up.
- The machine also has four other hydraulic controls to adjust the speed and precision of these five functions; two of which are also on the radio transmitter. These controls are detailed later in this section.

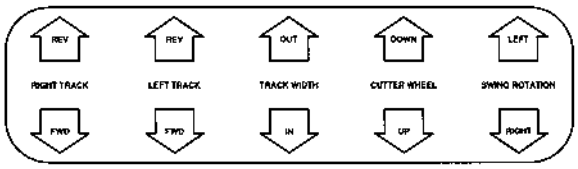

RIGHT TRACK and LEFT TRACK

- Use both controls in the same direction (Fwd/Fwd or Rev/Rev) to move machine forward or reverse. The radio transmitter has a switch (BOTH TRACKS) that will move both tracks at the same time in the forward or reverse directions.
- Use controls opposite (Rev/Fwd or Fwd/Rev) of each other to turn machine either right or left. When rotating the machine, try not to leave one track stationary while rotating the other one around it as this could cause the machine to jump a track. If it is desired to spin the machine, counter-rotate the tracks.

TRACK WIDTH

- Use the Track Width control to **extend** the track width for more stability in positioning and during grinding or to **retract** the track width for maneuvering the machine through tight places.

The **Cutter head** may be moved in two directions; either up and down or side to side:

CUTTER WHEEL (LIFT)
(Shown as CUTTER HEAD –UP/DOWN on transmitter.)

- Raises cutter head (boom) up and down.

SWING ROTATION
(Shown as CUTTER HEAD –RIGHT/LEFT on transmitter.)

- Moves cutter head (boom) back and forth in a right and left rotation.

The following two controls must be operated from the machine controls:

SWING SPEED ADJUSTMENT

- Adjust swing speed for smooth operation. Turn valve clockwise to slow cutter head swing. Close valve by turning counter-clockwise to allow head to move side to side at low RPM.

GROUND SPEED ADJUSTMENT

- Ground speed adjustment only affects travel speed in low flow mode. Turn valve counter-clockwise to increase travel speed and clockwise to reduce travel speed.

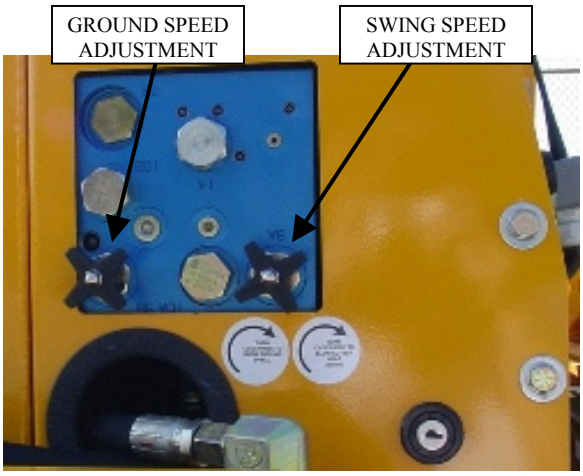

CUTTER WHEEL ENGAGEMENT

- Reduce engine speed to idle and raise cutter wheel clear of stump. Engage cutter wheel drive belt by lifting up the slide lock and slowly pulling engagement handle back.
- **DO NOT ENGAGE OR DISENGAGE BELT AT HIGH ENGINE SPEED; PERSONAL INJURY AND MACHINE DAMAGE MAY OCCUR. ALWAYS DISENGAGE BEFORE TURNING MACHINE ON OR OFF.**

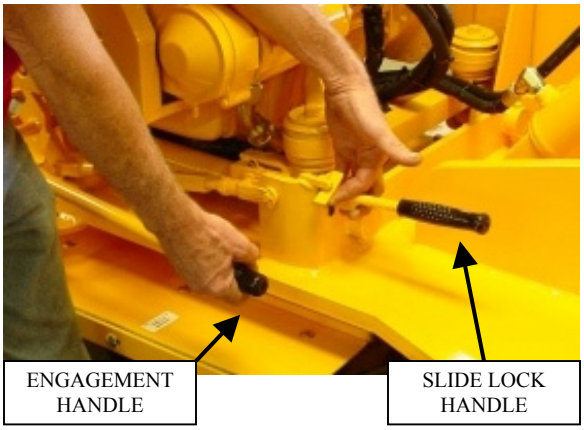

FLOW CONTROL

- Flow control affects how fast the machine travels. High flow is for moving the machine from one place to another very quickly. Low flow is used for more precision in tight places or when positioning the cutter wheel close to the stump. For further control of the ground speed in low flow use the ground speed control knob. The machine must be in low flow for the cutter head positioning functions to operate. The machine flow switch must be in LOW to start the radio transmitter.
- To operate from the radio transmitter, toggle the Gear/Flow switch down once for HIGH Flow and down a second time for LOW Flow.

GEAR CONTROL

- Gear control affects both the travel speed and track motor torque. In high gear the machine moves faster with less track motor torque. In low gear the machine will travel slower with more track motor torque. Use low gear in situations where more climbing power and track motor torque are needed. The machine gear switch must be in LOW to start the radio transmitter.
- To operate from the radio transmitter, toggle the Gear/Flow switch up once for HIGH Gear and up a second time to go to LOW Gear.

- When the transmitter is shut down (E-Stop), the Gear/Flow switch goes to low.

FLOW/GEAR COMBINATIONS		GEAR	
		LOW	HIGH
FLOW	LOW	Slowest Speed High Torque	Medium Speed Low Torque
	HIGH	Medium Speed High Torque	Fastest Speed Low Torque
Use Ground Speed Adjustment control to fine tune travel speed in low flow mode.			

TO OPERATE GEAR FROM TRANSMITTER, TOGGLE THE SWITCH UP ONCE FOR HIGH AND UP A SECOND TIME FOR LOW

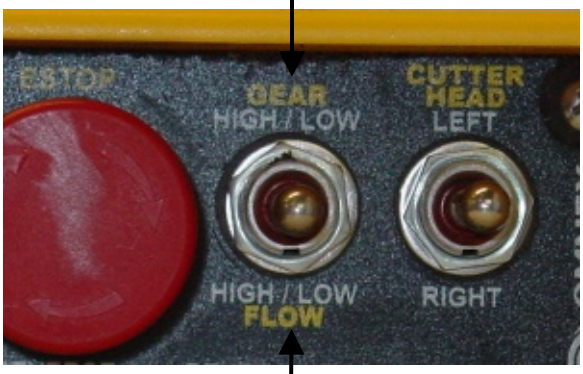

TO OPERATE FLOW FROM TRANSMITTER, TOGGLE THE SWITCH DOWN ONCE FOR HIGH AND DOWN A SECOND TIME FOR LOW

SAFETY

- **NEVER SERVICE A MACHINE WITH THE ENGINE RUNNING, SEVERE PERSONAL INJURY COULD OCCUR. TURN ENGINE OFF THEN REMOVE IGNITION KEY AND DISCONNECT POSITIVE BATTERY CABLE TO AVOID STARTING MACHINE ACCIDENTALLY.**
- **CUTTER WHEEL MUST BE DISENGAGED BEFORE TURNING ENGINE ON/OFF AND BEFORE SERVICING A MACHINE. OTHERWISE SEVERE PERSONAL INJURY COULD OCCUR AS WELL AS MACHINE DAMAGE.**
- **ALL MACHINE PARTS MUST COME TO A COMPLETE STOP AND HAVE TIME TO COOL COMPLETELY BEFORE SERVICING A MACHINE OR SEVERE INJURY COULD OCCUR, POSSIBLY SERIOUS BURNS AND/OR DISMEMBERMENT.**
- **PLACE THE CUTTER WHEEL ON THE GROUND WHEN PERFORMING SERVICE ON A MACHINE.**

PROGRAMMING – RADIO (WIRELESS) TRANSMITTER

- If there is a problem with the receiver or the transmitter and either has to be replaced, you will need to program the new unit to communicate with the existing unit. Or if you have more than one transmitter for this machine, it will need to be programmed to communicate with the existing receiver.
- To program the transmitter and receiver, you have to download the transmitter's unique code into the receiver. There are complete instructions along with colored illustrations in the radio control manual included in the back of this manual.
- To access the receiver, remove the front cover from the machine control box.

- Remove the cover of the remote receiver with the radio receiver attached. This will make it easier to work with the radio receiver. Remove the radio receiver panel by unlatching the plastic tabs on either side of the receiver; see the radio control manual included in this manual at the back. The receiver panel will now slide out of the cap.
- Follow the instructions in the radio control manual, included at the end of this manual, to download the ID Code. There are specific instructions that need to be followed and corresponding illustrations.

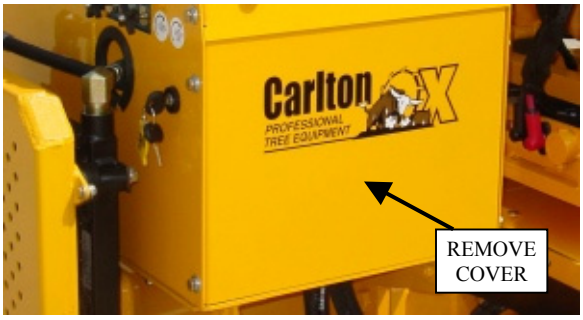

BE SURE TO PUSH THE RECEIVER PANEL BACK UP INTO THE COVER UNTIL THE TABS SNAP BACK INTO PLACE.

TROUBLESHOOTING

SEE THE RADIO CONTROL MANUAL FOR ANY OPERATING PROBLEMS WITH THE RADIO RECEIVER & TRANSMITTER
(Included in the back of this manual)

- Contact your Carlton dealer if you need assistance not the radio control manufacturer.
- First check the batteries to make sure they are providing enough power to operate the transmitter.
- There is a low battery light on the transmitter, when it starts flashing you have approximately 10 hours of operation before the batteries die.
- Remove the back cover on the transmitter. Remove old batteries and replace with new batteries. The transmitter operates using 4 AA alkaline batteries.

- Next, open the cover on the machine control box. You will need to be able to see the lights on the receiver to compare to the trouble indicators on the receiver diagnostic list in the radio control manual. Check the light configuration and compare it to the Receiver Diagnostic list in the radio control manual.

- If status light on radio receiver is flashing red, a fuse is blown. To change a fuse, remove the receiver from the cover and change the fuse. Inspect wiring for short circuits (e.g. bare wires). If problem re-occurs, call for service. Push the receiver panel back up into the cover until the tabs snap back into place.

- Always replace the cover when maintenance or troubleshooting is complete. DO NOT RUN MACHINE WITHOUT ALL GUARDS & COVERS IN PLACE AND SECURED.

REMOVE THE BACK COVER TO ACCESS THE BATTERIES – THERE ARE 4 SCREWS HOLDING IT IN PLACE. THE BATTERY COMPARTMENT IS LABELED FOR CORRECT BATTERY ORIENTATION.

RELEASE THE RADIO RECEIVER CAP BY UNLATCHING THE TABS ON EACH SIDE AND DROP THE RECEIVER UNIT DOWN FOR SERVICE

REFERENCE THE LIGHT CONFIGURATION ON THE RECEIVER TO THE DIAGNOSTIC CHART IN THE RADIO CONTROL MANUAL

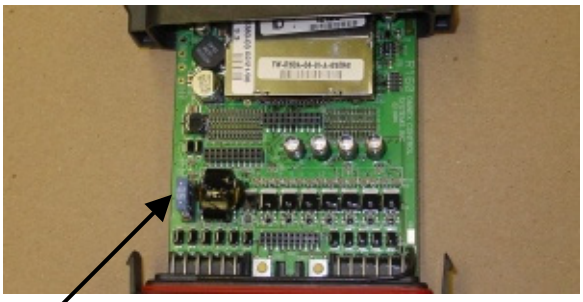

REPLACE FUSE

DO NOT TOW! THE MODEL SP7015 TRX IS DESIGNED TO BE TRANSPORTED TO THE JOB SITE AND WILL MOVE UNDER ITS OWN POWER ONCE ON SITE.

Transport machine in a suitable vehicle designed for a load of these dimensions and weight. A low trailer is recommended due to its decreased entry height, and will be safer all around.

- **THE TRAILER MUST BE SECURELY ATTACHED TO THE TOW VEHICLE BEFORE LOADING OR UNLOADING THE STUMP GRINDER.**
- **LOADING RAMPS MUST BE STURDY AND SECURELY ATTACHED TO THE TRAILER BEFORE ATTEMPTING TO LOAD OR UNLOAD THE MACHINE.**

- **Check trailer for security and make sure chains are properly installed.**
- **Check tires inflation.**
- **Check trailer lights for proper operation.**
- **Never transport the machine with the engine running.**
- **Towing will affect handling. Allow for extra stopping distances.**
- **Start and stop gradually.**
- **Tow at a safe reasonable speed.**

- **THE TRAILER MUST BE SECURELY ATTACHED TO THE TOW VEHICLE BEFORE LOADING OR UNLOADING THE STUMP GRINDER.**
- **DO NOT LOAD OR UNLOAD ON ANYTHING OTHER THAN LEVEL GROUND.**

LOADING

- Start engine as recommended by the engine manufacturers manual.
- Increase engine RPM, raise cutter head just off the ground.
- Position the machine behind the trailer and close to the loading ramps. Push the forward track controls on the remote control and watch closely to make sure both tracks stay on the ramps while loading. KEEP THE MACHINE AS LEVEL AS POSSIBLE.
- Continually adjust the cutter head height as you go up the ramps, keeping the mass as low to the ground as possible.
- When the machine is loaded, lower the cutter head and shut down the engine.
- Secure the machine tightly with sufficient tie downs to prevent any movement in transit.

UNLOADING

- With trailer still securely attached to tow vehicle, remove tie down straps and make sure ramps are securely attached to trailer and positioned correctly to unload the machine.
- Start engine, increase RPM, and raise cutter head to just clear the deck and ramp.
- Continually adjust the cutter head up and down to keep the mass as low to the ground as possible.
- Raise cutter head and proceed to the work site using extreme caution on hills and uneven terrain. Use the gear and flow controls in high position to get to the job site faster and use the gear and flow controls in low to make climbing easier. See the Machine Controls section for more information.

STARTING - READ THIS MANUAL, ALL MACHINE DECALS, AND THE ENGINE MANUAL BEFORE STARTING.

- Check all fluids before starting.
- Drive belts (cutter wheel) must be disengaged before starting.
- Inspect all connections, teeth, tracks, etc. (See Daily Checklist).
- Avoid transversing slopes. Ascend/descend hills straight up & down.

- **DO NOT OPERATE THE ENGINE AT AN ANGLE GREATER THAN 25° OR SEVERE ENGINE DAMAGE WILL OCCUR.** PROPER ENGINE OIL LEVEL MUST BE MAINTAINED TO ACHIEVE MAXIMUM ANGLE OF OPERATION OF 25°. (See Engine Owner's Manual for proper oil level.)
- **DO NOT OPERATE AROUND WATER, GAS, POWER OR PHONE LINES. IF IN DOUBT, CHECK BEFORE GRINDING.**
- **WEAR FACESHIELD AND HEARING PROTECTION.**
- **KEEP CLEAR OF CUTTING WHEEL AND MOVING MACHINE PARTS.**
- **KEEP SPECTATORS AWAY.**

- THE CUTTER WHEEL MUST BE DISENGAGED BEFORE STARTING THE MACHINE.
- The SP7015 *TRX* stump grinder is a radio control machine. To start the engine and radio control transmitter, follow these instructions.
- On the machine, turn the ignition key switch to ON, the machine switch to **Remote On,** and make sure the flow and gear switches are in the LOW position.
- On the transmitter, press the **E-STOP** button down.
- Toggle any switch on the transmitter.
- Twist the **E-STOP** button clockwise to release. Release the E-STOP button within 10 seconds to power up or the unit will power down. When the transmitter is operating there is a yellow light that will be flashing, the light is indicated in the picture at the right. (Read the radio control manual for more information on the meaning of different lights and colors.) If the transmitter doesn't start, check the transmitter for stuck switches; it will not start with a switch in the ON position.

- Now start the engine, turn the key switch while pressing the by-pass switch to start the machine. If the engine doesn't start right away and you have to restart it, turn the key switch OFF and back ON. Make sure the light on the transmitter is still on, and restart the engine by turning the key and pressing the by-pass switch. If you lose the connection (light off), repeat the procedure from the beginning and perform each step exactly as described.
- Start engine at half speed and allow sufficient time for oil to circulate before proceeding. Test controls for proper operation.

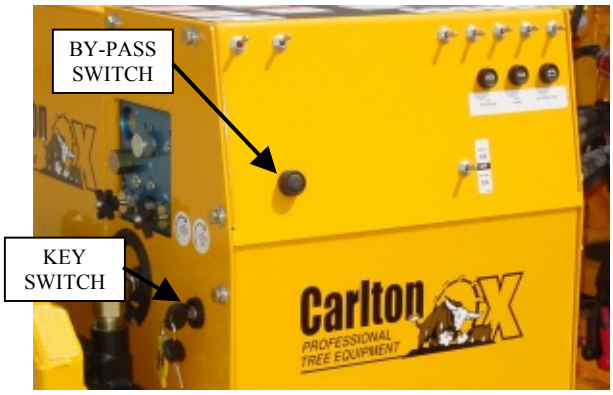

- Position machine at stump with cutter wheel a slight distance away from stump. **Do not engage cutter wheel when positioning machine near stump. Hitting the stump with the cutter wheel running will break the Poly Chain® belt.**

- Reduce engine speed to idle.
- Put machine flow control in low. Cutter head positioning functions only operate in low flow. (See Machine Controls section.)
- Raise cutter head clear of stump.
- Engage cutter head drive belts by lifting the engine slide lock and raising the engagement handle to slide the engine forward and engage the cutter wheel. **DO NOT ENGAGE OR DISENGAGE BELT AT HIGH ENGINE SPEED; PERSONAL INJURY AND MACHINE DAMAGE MAY OCCUR.**
- Increase engine speed to full. Test controls for proper operation, speed, and unobstructed movement.

- Cutter head swing speed should be adjusted to a rate that will allow cutter wheel to pass through stump smoothly. If jerking, bouncing or significant drops in engine speed occur, swing rate is too rapid and must be decreased.
- Swing speed should be determined and adjusted with the controls in the full open position.
- A counter-rotating valve is located within the hydraulic system to adjust this speed. Turning the handle clockwise will open the bypass and slow swing action. Turning it counter-clockwise will increase swing rate.

- Lower spinning cutter wheel to stump and make a few light passes at stump to get a feel for the cutting action.
- Gradually increase cutting action and work away at stump by swinging cutter wheel left- to-right-to-left through stump in a sideways motion. Smooth, effortless cutting lengthens machine life, minimizes downtime and is more profitable in the long run.
- Continue cutting stump by adjusting cutting wheel progressively lower until stump is cut well below ground level.

- Raise and swing cutter wheel clear of stump and position machine closer to stump for next series of passes. Lower and continue cutting.
- Continue in this manner until stump has been removed.
- Larger stumps may require repositioning machine to work at best advantages.

- Raise cutter wheel clear of stump and return to center position.
- Reduce engine speed to idle. DO NOT TURN OFF MOTOR. Engine must be allowed to cool slowly at idle for 3-5 minutes to avoid damage.
- With engine at idle; disengage drive belts by slowly releasing engagement handle.
- **DO NOT ENGAGE OR DISENGAGE BELT AT HIGH ENGINE SPEED; PERSONAL INJURY AND MACHINE DAMAGE MAY OCCUR.**
- Turn off motor. Allow cutter wheel to come to a full stop before inspecting work area.

SAFETY

- **NEVER SERVICE A MACHINE WITH THE ENGINE RUNNING, SEVERE PERSONAL INJURY COULD OCCUR. TURN ENGINE OFF THEN REMOVE IGNITION KEY AND DISCONNECT POSITIVE BATTERY CABLE TO AVOID STARTING MACHINE ACCIDENTALLY.**
- **CUTTER WHEEL MUST BE DISENGAGED BEFORE TURNING ENGINE ON/OFF AND BEFORE SERVICING A MACHINE. OTHERWISE SEVERE PERSONAL INJURY COULD OCCUR AS WELL AS MACHINE DAMAGE.**
- **ALL MACHINE PARTS MUST COME TO A COMPLETE STOP AND HAVE TIME TO COOL COMPLETELY BEFORE SERVICING A MACHINE OR SEVERE INJURY COULD OCCUR, POSSIBLY SERIOUS BURNS AND/OR DISMEMBERMENT.**
- **PLACE THE CUTTER WHEEL ON THE GROUND WHEN PERFORMING SERVICE ON A MACHINE.**

- Check engine oil at dipstick with the engine sitting level. Add recommended oil and changes oil as required per the engine owner's manual.

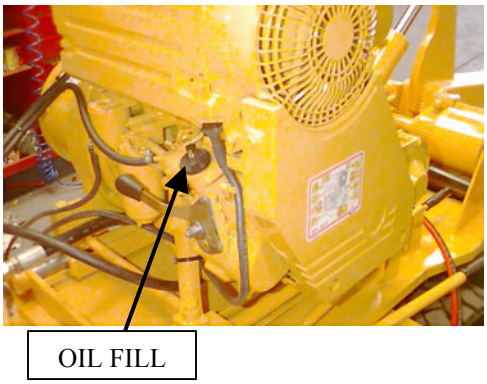

- Check hydraulic oil tank. A sight glass is provided on the tank for easy viewing. If fluid is visible in the sight glass, oil level is good. Keep tank filled to the proper level, approximately 7/8 full, leaving space at the top for expansion as oil gets warm.
- This machine is equipped with Citgo AW 32 hydraulic oil at the time of manufacture. Refill with the same or equivalent oil.

- Clean Poly Chain® belt guard **weekly** by removing the bottom guard. **Chip build-up will wear the Poly Chain® belt.**

- Check cutter wheel, pockets, and teeth for wear **daily**. If any repair is needed, see Servicing Cutter Wheel section for further instruction.

- Check setscrews in cutter wheel bearing collars for tightness weekly.

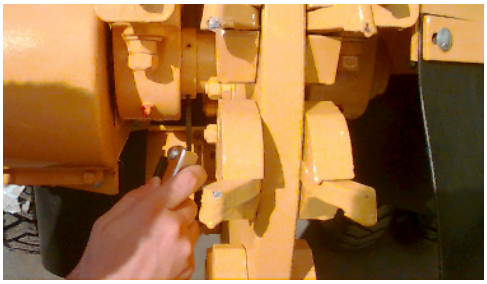

- Check setscrews in jackshaft bearing collars and in boom bearing collars for tightness weekly.

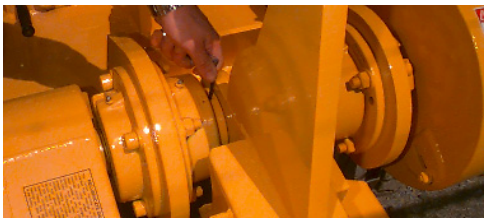

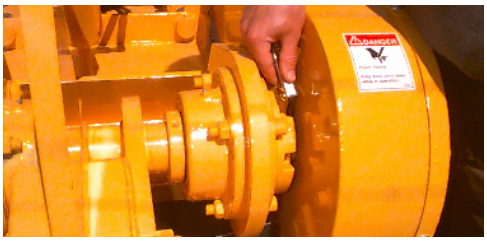

Always clean tip of grease gun fitting and grease fitting on machine before attaching hose to prevent dirt from being forced into machine parts.

- Grease the bearing supported stub shaft every 1000 hours of operation using Texaco® Starplex II grease. The grease fitting is easily accessible behind the V-belt guard. Apply grease using a hand held grease gun until the pin extends from the pressure relief valve (located 180°from grease fitting on the bearing). Wipe off excess grease. **Excess grease will attract dirt.**

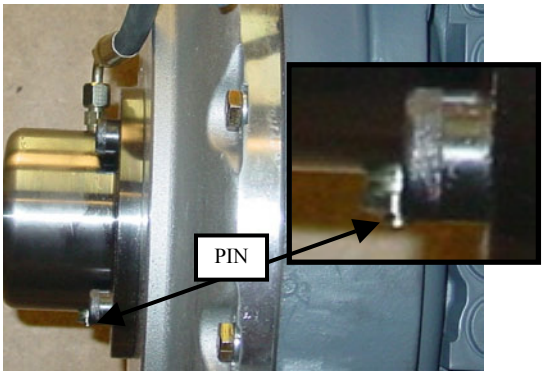

- A grease fitting is on the end of the stub shaft to grease the spline coupling. Apply 2 to 3 shots of grease approximately every 1000 hours of operation. Wipe off excess grease. **Excess grease will attract dirt. DO NOT over grease, over greasing could cause a hydraulic type lift on seals**.

- Grease engine slide and engagement handle **weekly**. Use Texaco® Starplex II grease.

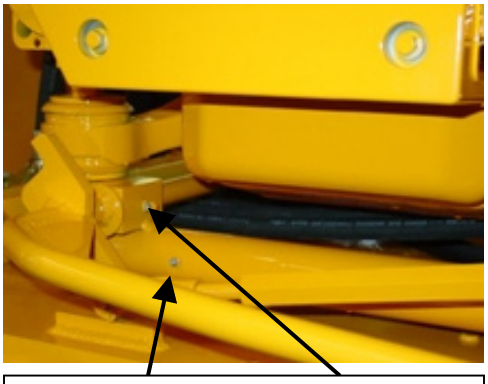

ENGINE SLIDE (6) AND ENGAGEMENT (2) GREASE FITTINGS

TRACK TENSIONING

- The tracks are tensioned by adding grease to the tensioning cylinder. This is accomplished by using a standard hand operated grease gun. Each track has a grease fitting located beneath a cover cap on the side of the track. Remove the cap to access the tensioning grease fitting. Install grease into the tensioning fitting using a standard hand operated grease gun. It should only take a few pumps of grease to tension the tracks.

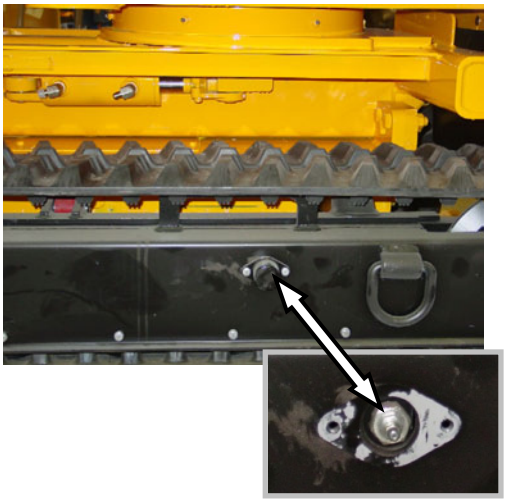

- On the top of the track frame there is an opening in which a washer and socket head cap screw can be felt and examined by hand. At right are pictures showing the location of this slot.
- Check the track tension using your hand to reach in this slot and gauge the distance between the washer and plate.

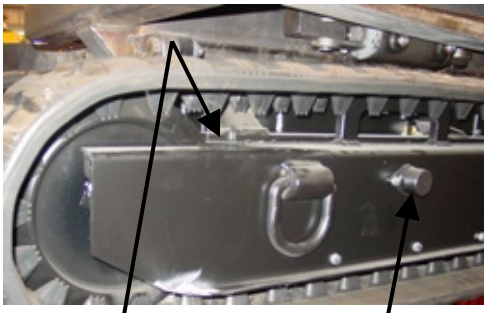

LOCATION OF SLOT FOR CHECKING TRACK TENSION

GREASE FITTING CAP COVER

PLATE

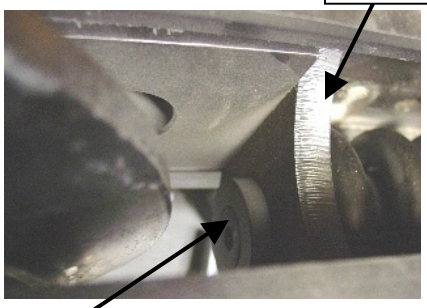

WASHER

CLOSE UP OF SLOT

- The washer shown here should have a gap of 1/2” between it and the plate when the track is tensioned properly. Apply a few pumps of grease and then check the distance between the washer and the plate shown. You will measure the distance using your finger to gauge approximately 1/2”. (The picture at the right was taken with the track removed for clarity. DO NOT remove the track when checking and adjusting tension.)
- Apply grease until the 1/2” distance is achieved and then replace the cap.
- Grease tracks as necessary to keep them from jumping off. DO NOT OVER GREASE OR DAMAGE WILL OCCUR

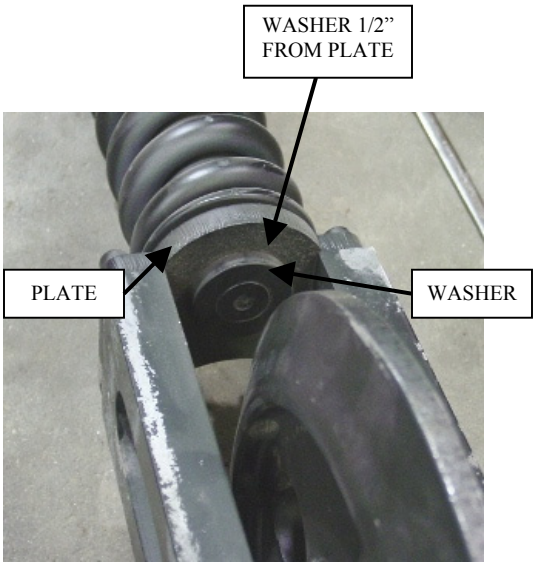

CAUTION

DO NOT OVER-TENSION TRACKS!!

TOO MUCH TRACK TENSION CAN CAUSE TRACK DAMAGE, BEARING DAMAGE, AND/OR FRAME DAMAGE. TENSION TRACKS ACCORDING TO OWNER'S MANUAL.

JPC

- The model SP7015 *TRX*, as well as all of our machines, is built to be a rugged performer. Your new machine is sturdy and our design goals are simplicity and reliability.
- A regularly scheduled maintenance program will pay big dividends in machine life, performance and avoided downtime.

Lubrication Schedule

- **Use Texaco® Starplex II grease.**

CARLTON PROFESSIONAL TREE EQUIPMENT - MODEL SP7015 TRX	DAILY	WEEKLY	2-3 Mon	6 Mon	Special Comments
- ENGINE SLIDE		▨			1-2 shots
- ENGAGEMENT LINKAGE		▨			1-2 shots
- TRACK TENSIONING CYLINDER					Give a few pumps using a standard hand held grease gun when track gets loose. DO NOT OVER GREASE!
- BEARINGS					
- Pivot Table Bearing		▨			Every 100 hours of operation or at least every 6 months when not in use
- Boom Bearings	▨				2-4 shots
- Jack Shaft Bearings	▨				2-4 shots
- Cutter Wheel Bearings	▨				Purge bearings daily
- Bearing Supported Stub Shaft				▨	Every 1000 hrs of operation apply grease until the pin on the opposite side of the stub shaft extends
- Stub Shaft End for Coupling				▨	Grease approximately every 1000 hrs. of operation 2 - 3 shots of grease

ENGINE
REFER TO ENGINE MANUFACTURERS MANUAL FOR PROPER ENGINE SERVICING

44TR-8_C (8/05/AB)

COMPLAINT	CAUSE	CORRECTION
Engine will not start. (See Engine Manufacturer Manual for further information.)	• Loose ground wire. • Loose hot wire. • Dead battery.	• Clean and tighten. • Clean and tighten. • Recharge or replace.
Hydraulic system loss of power.	• Low oil. • Valve set too low. • Missing or sheared key on pump shaft. • Bad cylinder.	• Refill with correct oil. • Adjust relief valve. • Remove pump, replace or repair keyway. • Replace cylinder packing.
Swing cylinder loss of power.	• Cutter head speed adjustment screw turned wide open.	• Screw in speed adjustment screw to close bypass. Re-adjust for "no bounce" cutting.
Belt Squeal.	• Belt tension too loose. • Belt out of line.	• Tighten. • Align Pulleys.
Belt jumping off.	• Engaging or disengaging belt at high engine RPM. • Belt keeper too far from belt.	• Only engage or disengage belts at low engine speeds. • Adjust keeper closer to belt.
Cutter wheel vibration.	• Tooth missing. • Pocket out of balance. • Improper tooth arrangement.	• Replace missing teeth. • Always replace pockets in pairs across from each other. • Install correctly with like pairs of teeth directly across from each other.
Cutter wheel throwing teeth.	• Bad pocket. • Dirt in pocket. • Worn cutter wheel.	• Replace pocket. • Clean pocket and replace missing teeth. • Replace cutter wheel.
Cutter wheel breaking teeth.	• Teeth set too far out of pocket.	• Use gauge to set teeth correctly.
Cutter wheel stops turning.	• Belt not engaged. • Engine belt broke. • Poly chain® belt broke. • Sheared key in shaft. • Broken cutter wheel shaft.	• Adjust yoke assembly. • Replace belt. • Replace belt. • Replace key. • Replace shaft.

COMPLAINT	CAUSE	CORRECTION
Roar in machine when cutter wheel is engaged.	• Belt guards rubbing on jackshaft or cutter wheel shaft. • Jackshaft or cutter wheel bearings going bad.	• Re-position guards away from shafts. • Replace bearings.
Traction loss of power.	• Relief valve set too low. • Hydraulic motor worn.	• Increase relief valve pressure by turning relief valve screw inward. • Replace Hydraulic motor.
Bearing will not take grease.	• Grease fitting clogged.	• Replace fitting
Cutter head swings faster one way than the other.	• Counter balance valve is out of adjustment.	• Adjust counter balance valve to equalize swing speed.
Track too loose.	• Tensioning cylinder too low on grease. DO NOT OVER GREASE TRACKS WILL BOW	• See Maintenance Section on Tensioning Tracks.

For all Radio Transmitter or Receiver problems, see the Radio Control Manual included at the back of this manual.

Replacing Engine Belt

SAFETY

- **NEVER SERVICE A MACHINE WITH THE ENGINE RUNNING, SEVERE PERSONAL INJURY COULD OCCUR. TURN ENGINE OFF THEN REMOVE IGNITION KEY AND DISCONNECT POSITIVE BATTERY CABLE TO AVOID STARTING MACHINE ACCIDENTALLY.**
- **CUTTER WHEEL MUST BE DISENGAGED BEFORE TURNING ENGINE ON/OFF AND BEFORE SERVICING A MACHINE. OTHERWISE SEVERE PERSONAL INJURY COULD OCCUR AS WELL AS MACHINE DAMAGE.**
- **ALL MACHINE PARTS MUST COME TO A COMPLETE STOP AND HAVE TIME TO COOL COMPLETELY BEFORE SERVICING A MACHINE OR SEVERE INJURY COULD OCCUR, POSSIBLY SERIOUS BURNS AND/OR DISMEMBERMENT.**
- **PLACE THE CUTTER WHEEL ON THE GROUND WHEN PERFORMING SERVICE ON A MACHINE.**

- Remove engine belt guard cover, by removing the nine bolts that hold it on.

- When replacing the engine belt, there are two belt keepers around the engine pulley and one behind the jackshaft pulley that need to be loosened. Once these are loosened the belt can be removed and replaced.

Replacing Engine Belt

- Slide the engine back toward the cutter wheel with the engagement handle as far as it will go, then remove the belt and put on the new belt.

- After replacing the belt, check it for tension. Slide the engine forward to engage the belt. **The belt should deflect 3/8" with 25 lbs. of force centered between the pulleys.** New belts will stretch and become loose as machine runs. Check belt tension often when belts are new.
- If any adjustment is required, there is a linkage assembly below the engagement handle on the operator side. Loosen jam nut and adjust clevis with wrench turning up toward machine. This will make engine slide further and will tighten the belt. Make only slight adjustments at a time and recheck tension; repeat as necessary until tension is correct. When proper tension is achieved, tighten jam nut back onto clevis.
- Use this same procedure to tighten loose belts.
- DO NOT OVER TIGHTEN BELT; OVERLY TIGHT BELTS WILL CAUSE BEARING AND ENGINE DAMAGE. Turn the clevis down with a wrench if the belt is too tight.
- Replace belts when worn or when repeated adjustments are necessary. Belts should never get so loose that all of the adjustment capability is used.

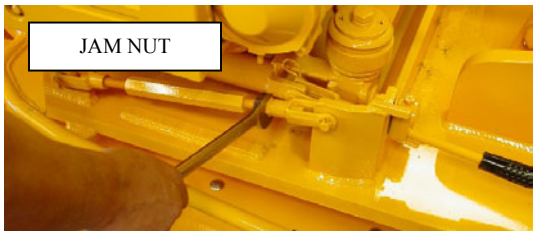

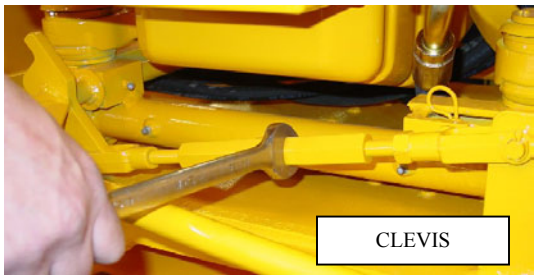

- If the belt tension was adjusted, the engine slide lock will also have to be adjusted. This locks the engine in the disengaged position so that the cutter wheel will not accidentally engage. When adjusting the engine slide lock, turn the clevis clockwise to shorten the length of the engine slide lock when the engagement linkage was lengthened. The engagement linkage would be lengthened to put more tension on the belt. Lengthen the engine slide lock if the engagement linkage was shortened.

Replacing Engine Belt

- Replace and tighten the belt keepers.

- Replace the v-belt guard cover and tighten bolts.
- NEVER RUN MACHINE WITHOUT ALL GUARDS IN PLACE AND SECURED.

GENERAL TENSIONING OF V-BELT DRIVES

A few simple rules about tensioning will satisfy most of your requirements.

1. The best tension for the V-belt drive is the lowest tension at which the belt will not slip under the highest load condition.
2. Check the tension on a new belt frequently during the first day of operation.
3. Thereafter, check the belt tension periodically.
4. Too much tension shortens belt and bearing life.
5. Keep belts and sheaves free from any foreign material that may cause slippage.
6. If a V-belt slips, tighten it.

Replacing Poly Chain® Belt

SAFETY

- **NEVER SERVICE A MACHINE WITH THE ENGINE RUNNING, SEVERE PERSONAL INJURY COULD OCCUR. TURN ENGINE OFF THEN REMOVE IGNITION KEY AND DISCONNECT POSITIVE BATTERY CABLE TO AVOID STARTING MACHINE ACCIDENTALLY.**
- **CUTTER WHEEL MUST BE DISENGAGED BEFORE TURNING ENGINE ON/OFF AND BEFORE SERVICING A MACHINE. OTHERWISE SEVERE PERSONAL INJURY COULD OCCUR AS WELL AS MACHINE DAMAGE.**
- **ALL MACHINE PARTS MUST COME TO A COMPLETE STOP AND HAVE TIME TO COOL COMPLETELY BEFORE SERVICING A MACHINE OR SEVERE INJURY COULD OCCUR, POSSIBLY SERIOUS BURNS AND/OR DISMEMBERMENT.**
- **DO NOT OPERATE A MACHINE WITHOUT A COMPLETE SET OF TEETH PROPERLY INSTALLED. EXCESSIVE MACHINE VIBRATION WILL OCCUR CAUSING PREMATURE BEARING FAILURE AND OTHER EQUIPMENT DAMAGE.**
- **PLACE THE CUTTER WHEEL ON THE GROUND WHEN PERFORMING SERVICE ON A MACHINE.**

Special care needs to be taken with your Poly Chain® belt. **Alignment**, **tension**, and **cleanliness** of this belt are very important. The Poly Chain® belt needs to be checked for tension approximately every 70 to 100 hours of use. The Poly Chain® belt must be running true. If you adjust one bearing more than the other, the belt will run on an angle, which will cause belt failure. A belt broken straight across is the result of a shock load. In a shock load failure, the fibers are broken and over a period of time the belt will break down from the shock load and snap in half. A broken belt with lost teeth indicates that the belt was loose. When replacing the Poly Chain® belt, do not try to pry belt on over pulley this can break the fibers. After you have installed or re-tensioned the Poly Chain® belt, you will have to re-adjust the engine belt for proper tension.

- Remove the Poly Chain® guard cover and bottom cover.

Replacing Poly Chain® Belt

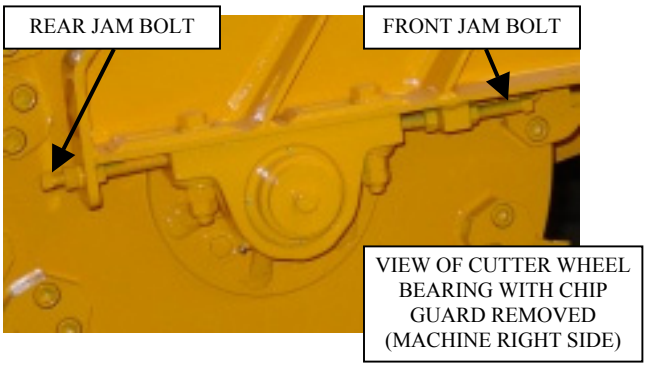

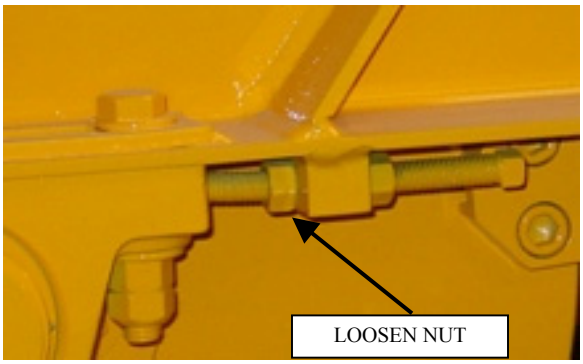

- Loosen the front jam bolts on the underside of the boom box and move the cutter wheel toward the engine as far as possible. This will loosen the Poly Chain® belt. You will need to loosen the same jam bolt on both bearings.
- **NOTE: Keep a count of how many turns you make on the jam bolts when you loosen them, making the same number of turns on both jam bolts. This makes adjusting the Poly Chain® belt easier when you are finished changing it. Tighten the jam bolts the same number of turns as you loosened them to keep the belt running true. Use a straight edge to check pulley alignment when adjustments have been made.**
- **Once the belt has been replaced, reverse the procedure to re-assemble the boom. Use the jam bolts on the cutter wheel bearings to adjust proper tension on the belt making sure to tighten or loosen them equally, keeping the sprockets aligned. See chart that follows for tensioning specifications.**

- If belt tension needs adjusting, tighten belt tension by loosening the jam bolts at the back of the machine. **Adjust both bearings the same amount or belt will run at an angle and cause breakage.** Loosen jam bolts on both sides the same amount and readjust the nuts on opposite side to lock position. Loosen cutter wheel bearing bolts and pull cutter wheel toward back of machine to tighten belt, retighten bolts. Reposition front jam bolts against cutter wheel bearing and tighten.

- Replace the Poly Chain® belt guard cover and the bottom cover.
- NEVER RUN MACHINE WITHOUT BELT GUARDS AND COVERS IN PLACE AND BOLTS TIGHTENED.

Replacing Poly Chain® Belt

Tensioning Procedure for Gates Poly Chain® GT® Belts

Gates Poly Chain GT belt's high performance characteristics dictate a need for correct installation tension. The following tables provide the required minimum and maximum deflection forces based on the belt pitch, pitch length, width and center distance. Deflection values are simplified based on full rated horsepower capacity per belt width. For drives not covered by the simplified tables, or drives not using full rated horsepower capacity, refer to Page 67 in Gates Poly Chain GT Drives Manual #17595.

Step 1: Based on belt pitch and width, locate the correct table.

Step 2: Locate the RPM of your faster shaft (smaller sprocket) in the first column.

Step 3: Locate the number of grooves on your small sprocket in the second column.

Step 4: Locate the correct column for your belt length (belt lengths shown at the top of each column).

Step 5: Under the correct belt length column, locate the center distance for your drive (center of driveR shaft to center of driveN shaft in inches).

Step 6: Read down to the intersection for the recommended minimum and maximum deflection force (pounds) for your drive.

Step 7: Apply that deflection force range for the appropriate deflection (1/64" per inch of span length). See sketch.

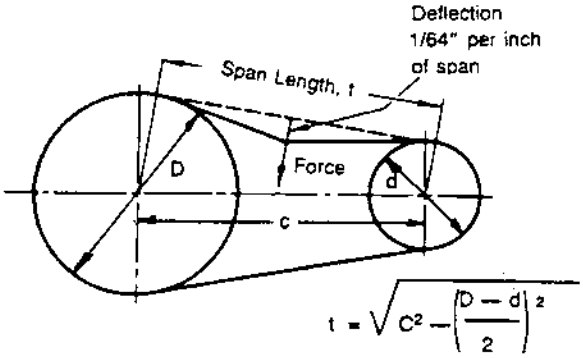

14M-68 Minimum and Maximum Deflection Force (lbs) for 68 mm Wide Poly Chain GT Belts

RPM of Faster Shaft	Number of Grooves on Small Sprocket	Center Distance (inches) for Belt Designation																									
		14M-994, 14M-1120				14M-1190, 14M-1260, 14M-1400				14M-1568, 14M-1750				14M-1960, 14M-2100, 14M-2240				14M-2380, 14M-2520, 14M-2660, 14M-2800				14M-3136, 14M-3304, 14M-3500				14M-3920, 14M-4410			
		CD <= 11.4		CD > 11.4		CD <= 13.7		CD > 13.7		CD <= 15.1		CD > 15.1		CD <= 22.2		CD > 22.2		CD <= 27.6		CD > 27.6		CD <= 40.0		CD > 40.0		CD <= 56.9		CD > 56.9	
	Sprocket	Min.	Max.	Min.	Max.	Min.	Max.	Min.	Max.	Min.	Max.	Min.	Max.	Min.	Max.	Min.	Max.	Min.	Max.	Min.	Max.	Min.	Max.	Min.	Max.	Min.	Max.	Min.	Max.
3200 & Over	28 to 30	43.8	46.7	45.5	46.8	48.1	50.6	49.2	52.0	52.1	53.3	54.5	57.1	57.7	59.3	59.9	63.2	61.7	64.4	64.2	68.0	66.9	70.4	69.6	73.3	73.1	76.6	74.2	78.5
	32 to 43	46.1	49.4	47.4	48.7	50.3	54.8	51.7	55.0	54.9	57.5	56.9	60.4	60.8	65.0	62.5	66.8	64.6	68.3	67.0	71.9	70.4	74.7	72.6	77.3	76.3	80.8	77.4	82.6
Under 3200	28 to 30	44.1	47.2	46.0	47.2	48.7	51.5	49.9	52.9	53.0	54.3	55.4	58.2	59.0	60.7	61.2	64.6	63.2	66.0	65.8	69.7	68.8	72.3	71.5	75.3	75.3	78.9	76.4	80.8
to 2400	32 to 56	46.2	49.0	47.3	48.0	51.0	55.7	52.3	55.4	56.7	60.8	57.9	61.7	62.9	67.6	64.0	68.5	66.9	72.3	68.9	74.0	73.0	77.7	75.0	79.8	79.1	84.3	80.1	85.7
Under 2400	28 to 30	45.1	48.3	47.1	48.3	50.0	52.8	51.2	54.2	54.6	55.7	57.0	59.8	60.9	62.5	63.0	66.5	65.3	68.0	67.9	71.8	71.3	74.6	73.9	77.6	78.0	81.4	79.1	83.3
to 1800	32 to 75	46.8	49.2	48.2	48.8	51.7	55.5	53.2	55.4	58.2	62.3	59.1	61.9	64.9	69.6	65.5	69.6	68.4	74.3	70.7	75.6	75.7	81.1	77.2	81.8	82.0	87.5	82.7	87.9
Under 1800	28 to 30	46.2	49.5	48.2	49.6	51.2	54.2	52.5	55.6	56.0	57.2	58.5	61.4	62.5	64.4	64.7	68.3	67.1	69.9	69.7	73.8	73.3	76.8	76.0	79.6	80.2	83.9	81.3	85.6
to 1400	32 to 60	47.7	50.1	49.2	49.9	52.6	56.3	54.3	56.4	59.0	62.3	60.2	62.7	66.0	68.9	66.8	70.2	70.9	75.1	72.3	76.2	77.4	82.1	79.0	82.7	83.9	88.9	84.7	89.1
Under 1400	28 to 30	47.8	51.3	49.9	51.4	53.0	56.3	54.3	57.7	58.0	59.4	60.5	63.7	64.6	67.0	67.0	70.9	69.6	72.7	72.2	76.6	76.1	79.9	78.8	82.9	83.2	87.2	84.3	89.1
to 1000	32 to 80	49.1	51.8	50.8	51.6	54.2	58.1	56.0	58.2	60.6	63.9	62.0	64.7	67.7	71.4	68.9	72.3	72.8	76.9	74.5	78.6	79.6	84.1	81.5	85.2	86.4	91.2	87.5	91.9
Under 1000	28 to 30	49.1	52.6	51.4	52.7	54.5	57.7	55.9	59.1	59.8	60.9	62.3	65.3	66.8	68.7	69.0	72.7	71.8	74.6	74.4	78.5	78.5	82.0	81.2	85.0	85.6	89.5	86.9	91.4
to 800	32 to 80	50.5	53.0	52.2	52.9	55.6	59.4	57.5	59.6	62.1	65.3	63.7	66.2	69.4	72.8	70.8	74.0	74.6	78.6	76.5	80.4	81.9	85.9	83.7	87.2	88.7	93.1	89.9	94.1
Under 800	28 to 30	50.6	54.3	52.9	54.4	56.2	59.6	57.6	61.0	61.7	62.9	64.2	67.4	68.9	71.1	71.1	75.0	74.1	77.1	76.7	81.1	81.0	84.8	83.7	87.6	88.5	92.5	88.6	94.4
to 600	32 to 80	52.0	54.7	53.7	54.5	57.2	61.3	59.2	61.4	63.9	67.2	65.6	68.2	71.3	75.0	72.9	76.3	76.7	80.9	78.7	82.8	84.3	88.4	86.2	89.9	91.3	95.8	92.6	96.9
Under 600	28 to 30	52.8	56.8	55.2	56.8	58.5	62.4	60.0	63.7	64.3	65.8	66.9	70.4	71.8	74.4	74.1	78.4	77.3	80.7	79.9	84.7	84.5	88.7	87.2	91.7	92.3	96.8	93.4	98.7
to 400	32 to 80	54.1	57.1	56.0	57.0	59.5	63.9	61.6	64.1	66.4	70.0	68.2	71.1	74.1	78.3	75.8	79.6	79.8	84.4	81.9	86.4	87.7	92.1	89.7	93.6	95.0	99.9	96.4	101
Under 400	28 to 30	56.3	61.0	58.8	61.1	62.4	67.1	63.9	68.4	68.6	70.9	71.3	75.5	76.7	80.2	79.0	84.1	82.5	86.8	85.2	91.0	90.3	95.5	93.0	98.5	98.5	104	99.6	106
to 200	32 to 80	57.6	61.3	59.6	61.2	63.4	68.6	65.8	68.8	70.7	75.1	72.6	76.3	78.9	84.0	80.6	85.3	84.9	90.6	87.1	92.6	93.4	98.8	95.4	101	101	107	103	108
Under 200	28 to 30	63.0	68.4	65.8	68.5	69.9	75.3	71.5	76.7	77.0	79.9	79.8	84.6	86.0	90.3	88.3	94.2	92.6	97.5	95.3	102	101	107	104	110	110	117	112	119
to 60	32 to 80	64.5	68.7	66.7	68.6	70.9	76.9	73.4	77.1	79.0	84.2	81.1	85.3	88.1	94.0	90.0	95.4	94.9	101	97.3	103	104	111	106	112	113	120	114	121

SAFETY

- **NEVER SERVICE A MACHINE WITH THE ENGINE RUNNING, SEVERE PERSONAL INJURY COULD OCCUR. TURN ENGINE OFF THEN REMOVE IGNITION KEY AND DISCONNECT POSITIVE BATTERY CABLE TO AVOID STARTING MACHINE ACCIDENTALLY.**
- **CUTTER WHEEL MUST BE DISENGAGED BEFORE TURNING ENGINE ON/OFF AND BEFORE SERVICING A MACHINE. OTHERWISE SEVERE PERSONAL INJURY COULD OCCUR AS WELL AS MACHINE DAMAGE.**
- **ALL MACHINE PARTS MUST COME TO A COMPLETE STOP AND HAVE TIME TO COOL COMPLETELY BEFORE SERVICING A MACHINE OR SEVERE INJURY COULD OCCUR, POSSIBLY SERIOUS BURNS AND/OR DISMEMBERMENT.**
- **PLACE THE CUTTER WHEEL ON THE GROUND WHEN PERFORMING SERVICE ON A MACHINE.**

Always clean tip of grease gun fitting and grease fitting on machine before attaching hose to prevent dirt from being forced into machine parts.

JACKSHAFT BEARINGS

- There are four (4) bearings on the jackshaft; two (2) mounted on the inside of the supports and two (2) mounted on the outside of the supports. These bearings should be greased daily to keep dirt and moisture out. These bearings should not be purged, only use 2 to 4 shots of grease.
  PROPER MAINTENANCE IS CRITICAL TO ENSURE LONG BEARING LIFE.

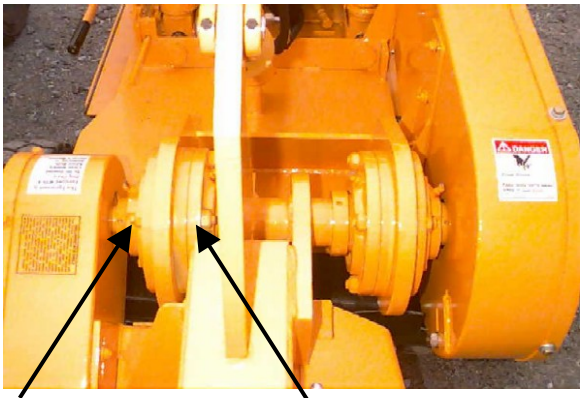

CUTTER WHEEL BEARINGS

- There are two (2) bearings on the cutter wheel shaft. These bearings should be purged using grease **EVERYDAY**. Purge until new grease is seen to keep dirt and moisture out.
  PROPER MAINTENANCE IS CRITICAL TO ENSURE LONG BEARING LIFE.

**** Your machine is lubed with Texaco® Starplex II grease when it is delivered from the factory. Starplex II is lithium complex soap grease, which contains a specially formulated additive package to provide excellent rust protection, resistance to water washout and extreme pressure properties. It is recommended as multipurpose, high performance grease for severe duty industrial applications involving high temperatures, water contamination and shock loading. Operating temperature range is from 450 F to -15 F.**

SERVICING PIVOT TABLE BEARING

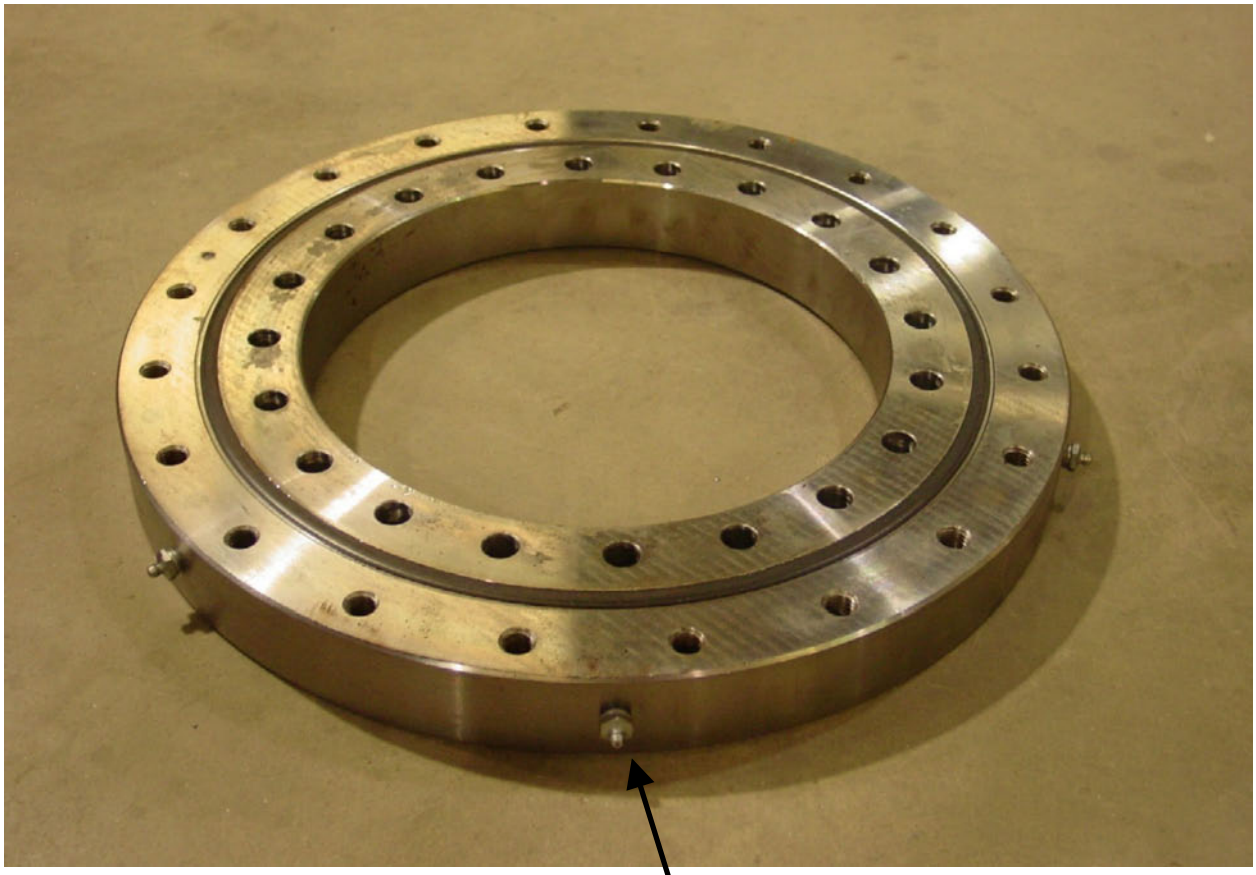

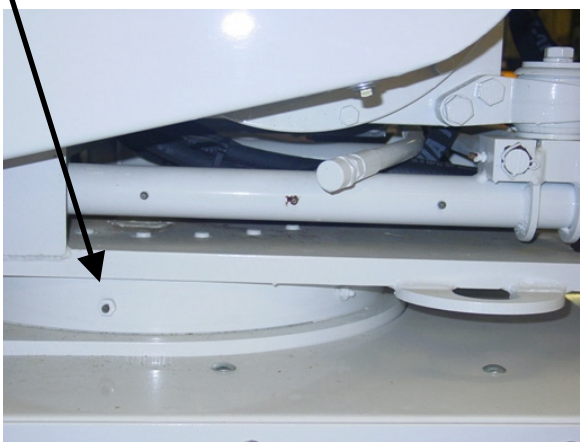

While turntable bearings require almost no attention, what little they are given will pay big dividends in long life, high performance, and trouble free service. Lubricate the bearing every 100 operating hours for relatively slow rotating applications. Idle equipment should not be neglected. Grease dries out and "breathing" due to temperature changes can cause condensation within the bearing. Whether used or not, the bearing should have grease introduced every 6 months. It is always a good idea to rotate the bearing a few turns to coat all surfaces with fresh grease.

Also when greasing bearing, inspect seals, making certain that they are in proper position in grooves and intact. Check tightness of mounting bolts and retighten if needed. Be alert to changes in rotation, unusual sounds, and vibrations.

SAFETY

- **NEVER SERVICE A MACHINE WITH THE ENGINE RUNNING, SEVERE PERSONAL INJURY COULD OCCUR. TURN ENGINE OFF THEN REMOVE IGNITION KEY AND DISCONNECT POSITIVE BATTERY CABLE TO AVOID STARTING MACHINE ACCIDENTALLY.**
- **CUTTER WHEEL MUST BE DISENGAGED BEFORE TURNING ENGINE ON/OFF AND BEFORE SERVICING A MACHINE. OTHERWISE SEVERE PERSONAL INJURY COULD OCCUR AS WELL AS MACHINE DAMAGE.**
- **ALL MACHINE PARTS MUST COME TO A COMPLETE STOP AND HAVE TIME TO COOL COMPLETELY BEFORE SERVICING A MACHINE OR SEVERE INJURY COULD OCCUR, POSSIBLY SERIOUS BURNS AND/OR DISMEMBERMENT.**
- **DO NOT OPERATE A MACHINE WITHOUT A COMPLETE SET OF TEETH PROPERLY INSTALLED. EXCESSIVE MACHINE VIBRATION WILL OCCUR CAUSING PREMATURE BEARING FAILURE AND OTHER EQUIPMENT DAMAGE.**
- **PLACE THE CUTTER WHEEL ON THE GROUND WHEN PERFORMING SERVICE ON A MACHINE.**

- There are thirty-two (32) teeth to a complete set on the model SP7015 *TRX*. Two (2) straight teeth, fifteen (15) left 45° teeth and fifteen (15) right 45° teeth.

- A locking pin is provided to hold cutter wheel in position during tooth removal and re-installation. Locking pin will only lock on outer teeth. **NEVER PLACE HAND ON CUTTER WHEEL TO HOLD IN PLACE WHILE CHANGING TEETH. BE SURE TO REMOVE PIN BEFORE OPERATING.**

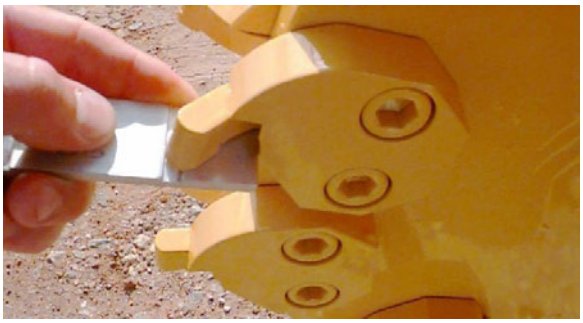

- A Tooth Setting Gauge **(P/N - 0450111)** is provided with each machine for proper tooth installation. Line all teeth up with the inside edge of the groove in the gauge. Set ***ALL*** teeth to this edge with gauge against pocket, not against cutter wheel. All teeth are set 1 1/4" out of the pocket to the edge of the carbide.

TOOTH ARRANGEMENT

- Inspect pockets, teeth, and bolts for damage and replace as required.
- When replacing pockets, always replace new pockets across from each other in order to prevent vibration.
- Replacement teeth must be carbide tipped and of like design as provided with the machine.
- Use anti-seize on threads to prevent bolts from "freezing up" in cutter wheel pockets.
- When replacing complete set of teeth, be sure to duplicate original factory tooth arrangement.
- Torque bolts to 150 ft/lbs.

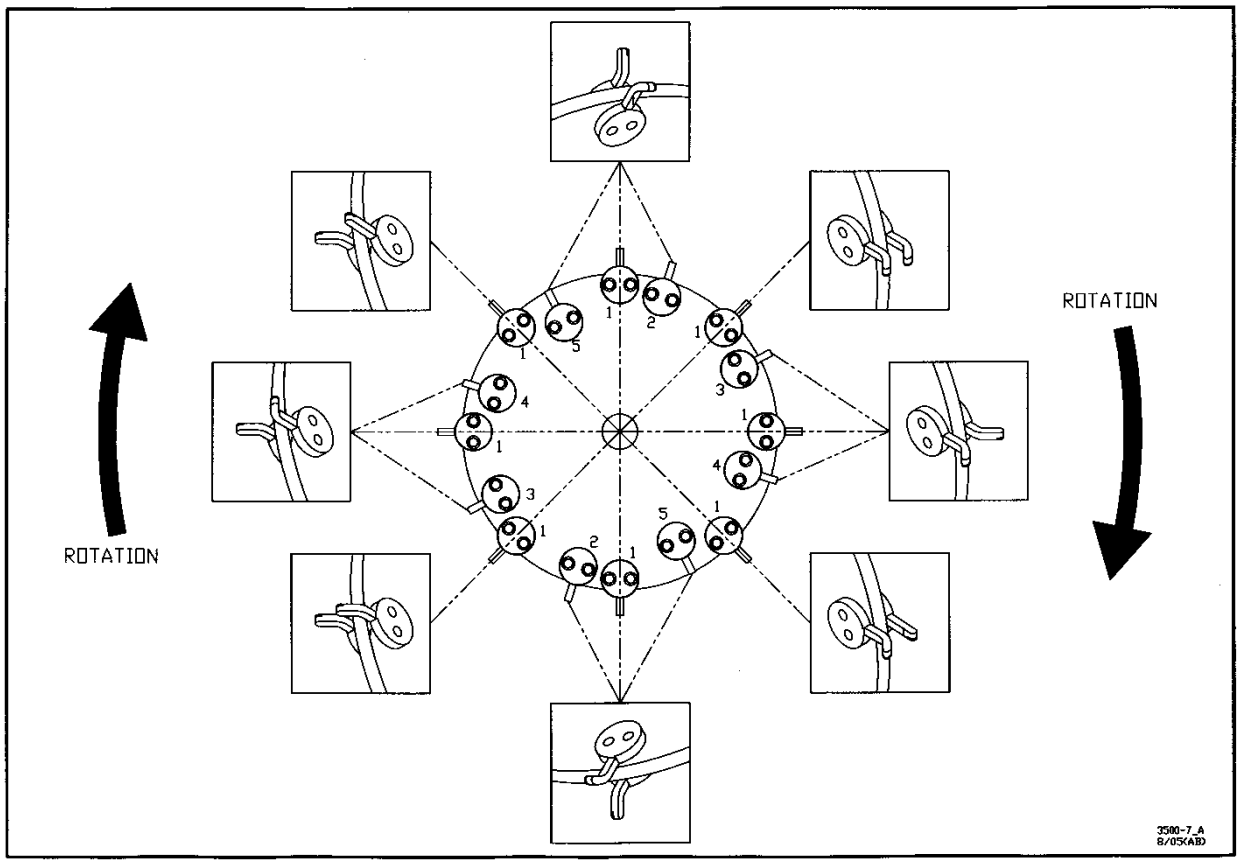

opposing outside pockets carry like arrangements of teeth to cancel vibration.

- Straight teeth are mounted in ***TWO OPPOSING OUTSIDE POCKETS.***
- A straight tooth must have a 45° tooth accompanying it in the same pocket set. The opposite pocket set should have this same combination of straight and 45° teeth, except with positions reversed. Mounting these teeth opposite each other on the cutting wheel cancels damaging vibration.
- Two Other Opposing Outside Pockets, as shown, must have 45° teeth overlapping centerline of wheel to make plunge cuts possible. Mount two left 45° teeth opposite two right 45° teeth.
- All remaining outside pockets and all inside pockets require 45° teeth mounted away from the wheel.
- The second pocket in each group gradually goes back into the cutter wheel for half a rotation and then repeats.

OPTIONAL:
Sandvik® Dura Disk II Cutter Wheel

- If the machine is supplied with the optional Dura Disk II cutter wheel, there are fifty (50) teeth to a complete set. There are ten (10) Short Plow Bolt Bits (Carlton part #0450121) and forty (40) Plow Bolt Bits (Carlton part #0450120).
- **DO NOT OPERATE A MACHINE WITHOUT A COMPLETE NUMBER OF TEETH IN THE CUTTER WHEEL PROPERLY INSTALLED. EXCESSIVE MACHINE VIBRATION WILL OCCUR CAUSING PREMATURE BEARING FAILURE AND EQUIPMENT DAMAGE.**

- A locking pin is provided to hold cutter wheel in position during tooth removal and re-installation.
- The locking pin will only lock in the deep slots of the outer teeth. Line the slot up with the locking pin slot and insert the pin to lock position. The pin will need to be removed and reinserted as wheel is rotated to change remaining teeth.
- **NEVER PLACE YOUR HAND ON THE CUTTER WHEEL TO HOLD IT IN PLACE WHILE CHANGING TEETH.**
- **BE SURE TO REMOVE THE PIN BEFORE OPERATING THE STUMP CUTTER.**

- The teeth do not require a setting gauge. The only requirement is to be installed in the proper direction and tightened to the proper torque as discussed in the next section.
- **When replacing a cutter wheel tooth, replace the tooth and nut as a set and use anti-seize on the threads.**

TOOTH ARRANGEMENT

- Inspect pockets, teeth and bolts for damage and replace as required.
- When replacing a cutter wheel tooth, replace the tooth and nut as a set and use anti-seize on the threads.
- When replacing teeth and pockets, also replace the teeth and pockets across from each other diagonally in order to maintain wheel balance and prevent vibration.
- All teeth and pockets are of a specific design and must be replaced with original manufacturer's replacement parts. Replacement teeth must be carbide tipped.
- When replacing complete set of teeth, be sure to duplicate original factory tooth arrangement. SEE DIAGRAM BELOW.
- The seating surfaces of the tooth and pocket are formed, but make sure the tooth is inserted with the carbide facing the direction of rotation.
- The pictured view is the engraved side of the wheel. The wheel is engraved with outside pocket numbers, outside pocket angle/direction (20 R or 20 L), and wheel rotation. (The engraved side of wheel is marked left side of wheel; this is for manufacturing purposes only. It does not refer to the left side of the machine as described in the General Information section.)
- Outside pocket teeth are Short Plow Bolt Bits. These pockets are angled and welded in place. You can switch teeth from one outside pocket to a pocket that is the opposite direction to prolong tooth life, such as switching a tooth from a 20 R with a tooth from a 20 L pocket. The cutting edge is the corner and this will turn the opposite corner out for use.
- These teeth are tightened with a Stover Lock Nut. Torque on Stover locking nuts is not to exceed 270 ft/lbs.
- All teeth on cutter wheel sides are Plow Bolt Bits. When changing these teeth you must remove both teeth in the same pocket, one on each side of the wheel. When the nuts are torqued, the pocket is jammed and the teeth can only be removed this way.
- These teeth are tightened with a Locking Jam Nut. Torque on locking jam nuts is not to exceed 128 ft/lbs.
- The pocket will receive wear when cutting and can be switched from one side of the cutter wheel to the other to prolong life. Remember the teeth must be replaced in the original position on each side of the wheel.

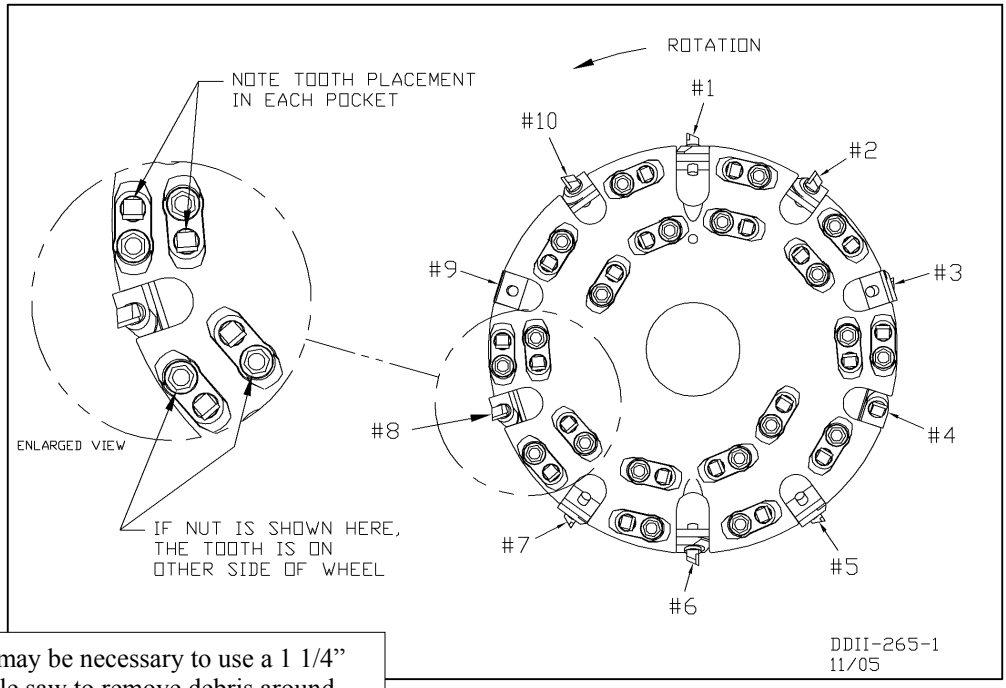

It may be necessary to use a 1 1/4" hole saw to remove debris around nut to make tooth removal easier.

TOOTH SHARPENING

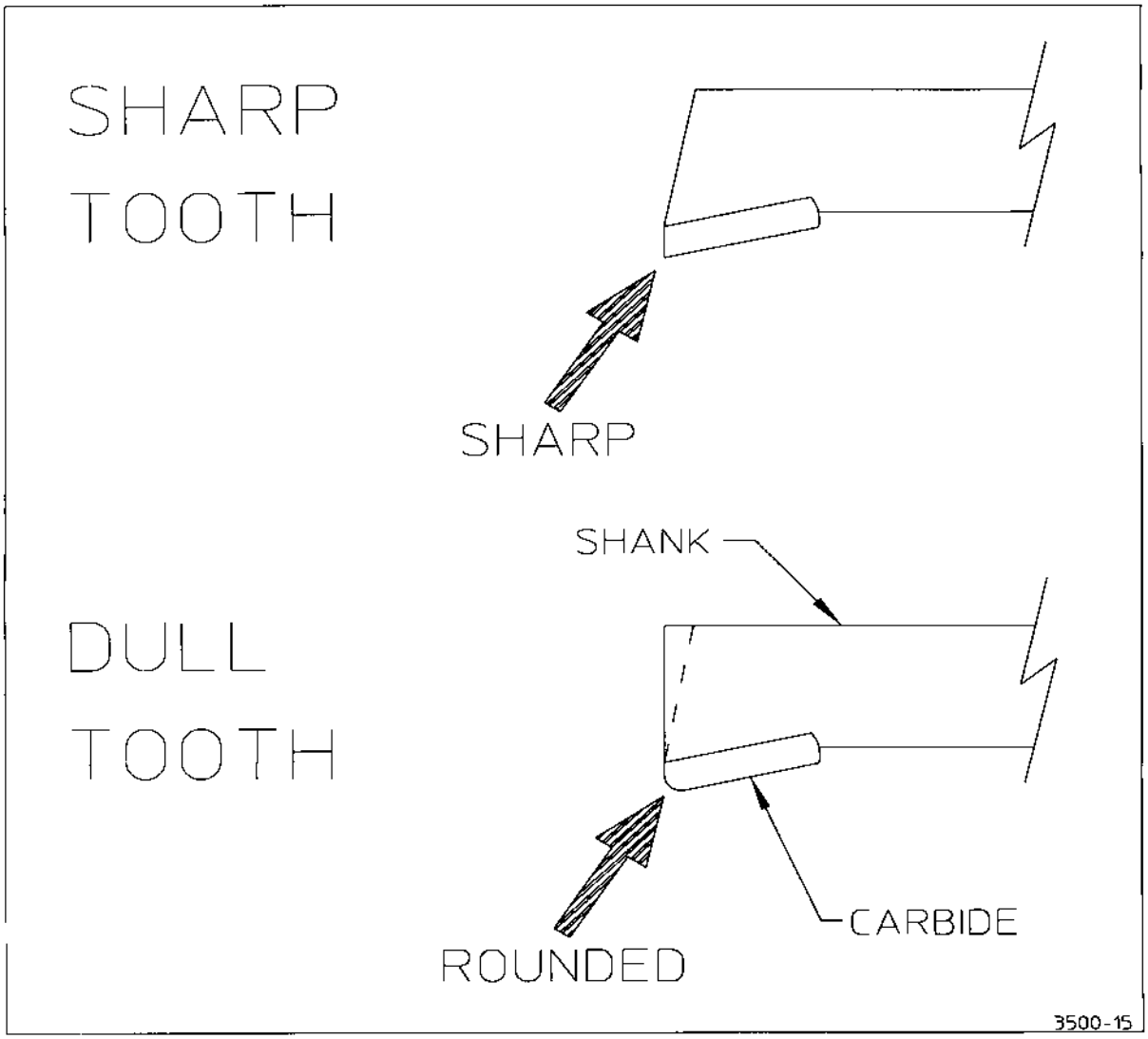

Begin by chamfering shank back past edge of carbide. You do this because if it is not back far enough the shank will hit the stump instead of the carbide, thus causing a lot of vibration. Once the shank is angled far enough back, then begin sharpening carbide.

- **Cut shank with a standard rock and cut carbide with a silicone carbide or diamond rock.**
  CAUTION: GRINDING CARBIDE CAN BE A HEALTH HAZARD. Use facemask to prevent breathing in harmful material while grinding.

SAFETY

- **NEVER SERVICE A MACHINE WITH THE ENGINE RUNNING, SEVERE PERSONAL INJURY COULD OCCUR. TURN ENGINE OFF THEN REMOVE IGNITION KEY AND DISCONNECT POSITIVE BATTERY CABLE TO AVOID STARTING MACHINE ACCIDENTALLY.**
- **CUTTER WHEEL MUST BE DISENGAGED BEFORE TURNING ENGINE ON/OFF AND BEFORE SERVICING A MACHINE. OTHERWISE SEVERE PERSONAL INJURY COULD OCCUR AS WELL AS MACHINE DAMAGE.**
- **ALL MACHINE PARTS MUST COME TO A COMPLETE STOP AND HAVE TIME TO COOL COMPLETELY BEFORE SERVICING A MACHINE OR SEVERE INJURY COULD OCCUR, POSSIBLY SERIOUS BURNS AND/OR DISMEMBERMENT.**
- **DO NOT OPERATE A MACHINE WITHOUT A COMPLETE SET OF TEETH PROPERLY INSTALLED. EXCESSIVE MACHINE VIBRATION WILL OCCUR CAUSING PREMATURE BEARING FAILURE AND OTHER EQUIPMENT DAMAGE.**
- **PLACE THE CUTTER WHEEL ON THE GROUND WHEN PERFORMING SERVICE ON A MACHINE.**

- There are thirty-two (32) teeth to a complete set on the model SP7015 *TRX*. Two (2) straight teeth, fifteen (15) left 45° teeth and fifteen (15) right 45° teeth.

- A locking pin is provided to hold cutter wheel in position during tooth removal and re-installation. Locking pin will only lock on outer teeth. **NEVER PLACE HAND ON CUTTER WHEEL TO HOLD IN PLACE WHILE CHANGING TEETH. BE SURE TO REMOVE PIN BEFORE OPERATING.**

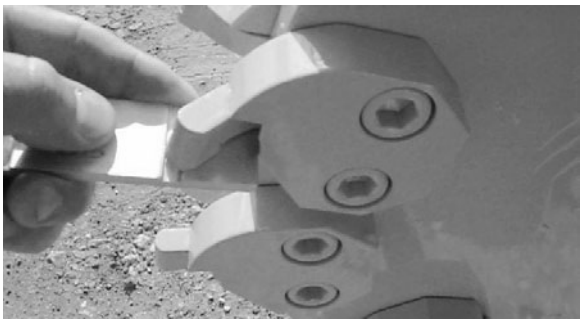

- A Tooth Setting Gauge **(P/N - 0450111)** is provided with each machine for proper tooth installation. Line all teeth up with the inside edge of the groove in the gauge. Set ***ALL*** teeth to this edge with gauge against pocket, not against cutter wheel. All teeth are set 1 1/4" out of the pocket to the edge of the carbide.

TOOTH ARRANGEMENT

- Inspect pockets, teeth, and bolts for damage and replace as required.
- When replacing pockets, always replace new pockets across from each other in order to prevent vibration.
- Replacement teeth must be carbide tipped and of like design as provided with the machine.
- Use anti-seize on threads to prevent bolts from "freezing up" in cutter wheel pockets.
- When replacing complete set of teeth, be sure to duplicate original factory tooth arrangement.
- Torque bolts to 150 ft/lbs.

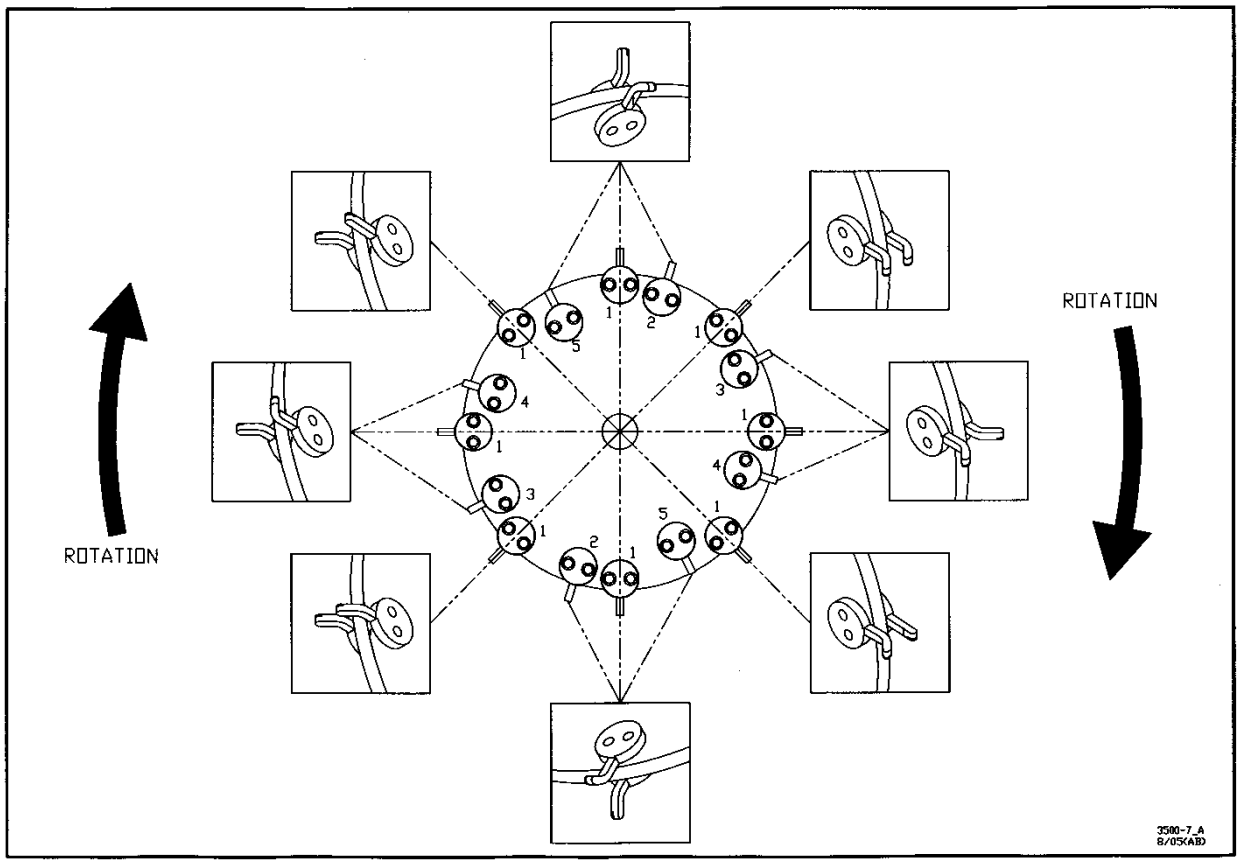

opposing outside pockets carry like arrangements of teeth to cancel vibration.

- Straight teeth are mounted in ***TWO OPPOSING OUTSIDE POCKETS.***
- A straight tooth must have a 45° tooth accompanying it in the same pocket set. The opposite pocket set should have this same combination of straight and 45° teeth, except with positions reversed. Mounting these teeth opposite each other on the cutting wheel cancels damaging vibration.
- Two Other Opposing Outside Pockets, as shown, must have 45° teeth overlapping centerline of wheel to make plunge cuts possible. Mount two left 45° teeth opposite two right 45° teeth.
- All remaining outside pockets and all inside pockets require 45° teeth mounted away from the wheel.
- The second pocket in each group gradually goes back into the cutter wheel for half a rotation and then repeats.

OPTIONAL:
Sandvik® Dura Disk II Cutter Wheel

- If the machine is supplied with the optional Dura Disk II cutter wheel, there are fifty (50) teeth to a complete set. There are ten (10) Short Plow Bolt Bits (Carlton part #0450121) and forty (40) Plow Bolt Bits (Carlton part #0450120).
- **DO NOT OPERATE A MACHINE WITHOUT A COMPLETE NUMBER OF TEETH IN THE CUTTER WHEEL PROPERLY INSTALLED. EXCESSIVE MACHINE VIBRATION WILL OCCUR CAUSING PREMATURE BEARING FAILURE AND EQUIPMENT DAMAGE.**

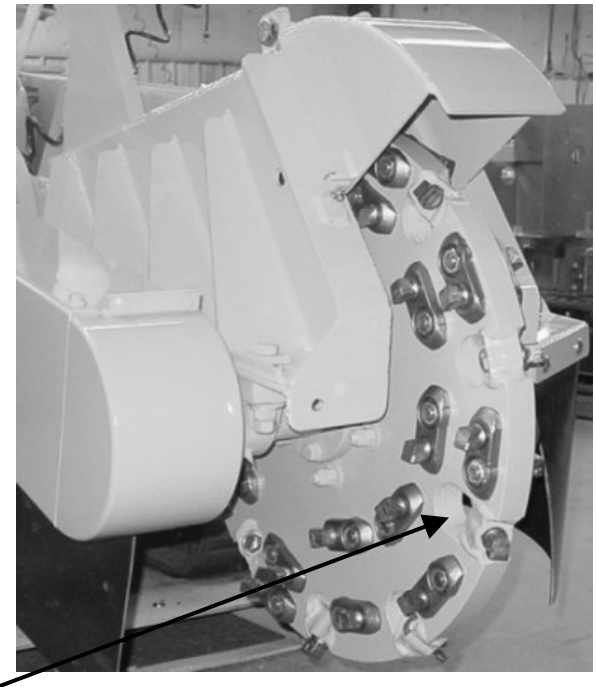

- A locking pin is provided to hold cutter wheel in position during tooth removal and re-installation.
- The locking pin will only lock in the deep slots of the outer teeth. Line the slot up with the locking pin slot and insert the pin to lock position. The pin will need to be removed and reinserted as wheel is rotated to change remaining teeth.
- **NEVER PLACE YOUR HAND ON THE CUTTER WHEEL TO HOLD IT IN PLACE WHILE CHANGING TEETH.**
- **BE SURE TO REMOVE THE PIN BEFORE OPERATING THE STUMP CUTTER.**

- The teeth do not require a setting gauge. The only requirement is to be installed in the proper direction and tightened to the proper torque as discussed in the next section.
- **When replacing a cutter wheel tooth, replace the tooth and nut as a set and use anti-seize on the threads.**

TOOTH ARRANGEMENT

- Inspect pockets, teeth and bolts for damage and replace as required.
- When replacing a cutter wheel tooth, replace the tooth and nut as a set and use anti-seize on the threads.
- When replacing teeth and pockets, also replace the teeth and pockets across from each other diagonally in order to maintain wheel balance and prevent vibration.
- All teeth and pockets are of a specific design and must be replaced with original manufacturer's replacement parts. Replacement teeth must be carbide tipped.
- When replacing complete set of teeth, be sure to duplicate original factory tooth arrangement. SEE DIAGRAM BELOW.
- The seating surfaces of the tooth and pocket are formed, but make sure the tooth is inserted with the carbide facing the direction of rotation.
- The pictured view is the engraved side of the wheel. The wheel is engraved with outside pocket numbers, outside pocket angle/direction (20 R or 20 L), and wheel rotation. (The engraved side of wheel is marked left side of wheel; this is for manufacturing purposes only. It does not refer to the left side of the machine as described in the General Information section.)
- Outside pocket teeth are Short Plow Bolt Bits. These pockets are angled and welded in place. You can switch teeth from one outside pocket to a pocket that is the opposite direction to prolong tooth life, such as switching a tooth from a 20 R with a tooth from a 20 L pocket. The cutting edge is the corner and this will turn the opposite corner out for use.
- These teeth are tightened with a Stover Lock Nut. Torque on Stover locking nuts is not to exceed 270 ft/lbs.
- All teeth on cutter wheel sides are Plow Bolt Bits. When changing these teeth you must remove both teeth in the same pocket, one on each side of the wheel. When the nuts are torqued, the pocket is jammed and the teeth can only be removed this way.
- These teeth are tightened with a Locking Jam Nut. Torque on locking jam nuts is not to exceed 128 ft/lbs.
- The pocket will receive wear when cutting and can be switched from one side of the cutter wheel to the other to prolong life. Remember the teeth must be replaced in the original position on each side of the wheel.

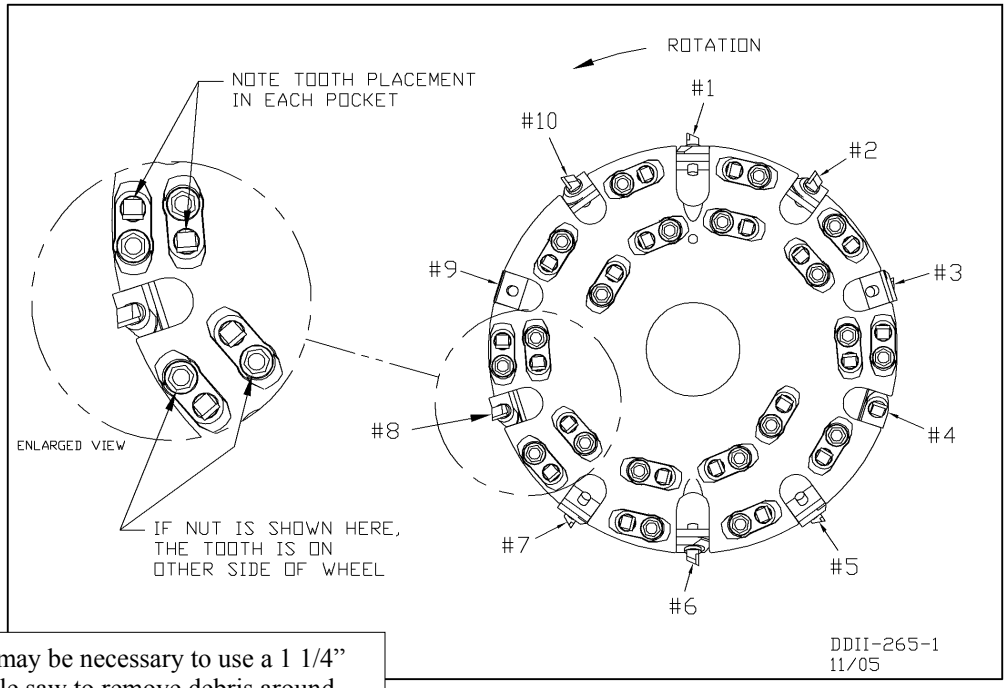

It may be necessary to use a 1 1/4" hole saw to remove debris around nut to make tooth removal easier.

TOOTH SHARPENING

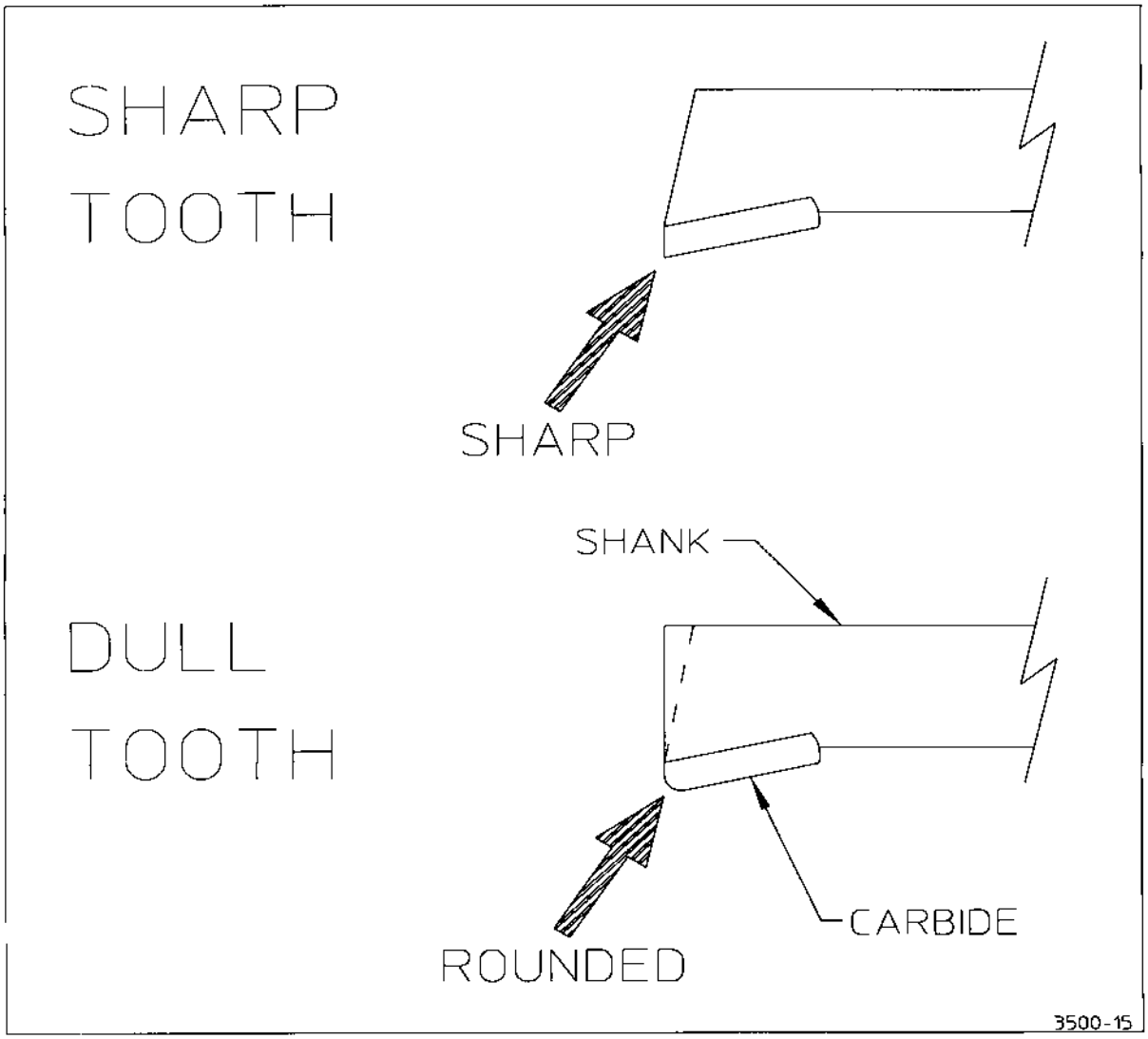

Begin by chamfering shank back past edge of carbide. You do this because if it is not back far enough the shank will hit the stump instead of the carbide, thus causing a lot of vibration. Once the shank is angled far enough back, then begin sharpening carbide.

- **Cut shank with a standard rock and cut carbide with a silicone carbide or diamond rock.**
  CAUTION: GRINDING CARBIDE CAN BE A HEALTH HAZARD. Use facemask to prevent breathing in harmful material while grinding.

SAFETY

- **NEVER SERVICE A MACHINE WITH THE ENGINE RUNNING, SEVERE PERSONAL INJURY COULD OCCUR. TURN ENGINE OFF THEN REMOVE IGNITION KEY AND DISCONNECT POSITIVE BATTERY CABLE TO AVOID STARTING MACHINE ACCIDENTALLY.**
- **CUTTER WHEEL MUST BE DISENGAGED BEFORE TURNING ENGINE ON/OFF AND BEFORE SERVICING A MACHINE. OTHERWISE SEVERE PERSONAL INJURY COULD OCCUR AS WELL AS MACHINE DAMAGE.**
- **ALL MACHINE PARTS MUST COME TO A COMPLETE STOP AND HAVE TIME TO COOL COMPLETELY BEFORE SERVICING A MACHINE OR SEVERE INJURY COULD OCCUR, POSSIBLY SERIOUS BURNS AND/OR DISMEMBERMENT.**
- **PLACE THE CUTTER WHEEL ON THE GROUND WHEN PERFORMING SERVICE ON A MACHINE.**
- **RELEASE HYDRAULIC PRESSURE BEFORE PERFORMING ANY SERVICE TO HYDRAULIC LINES OR OTHER COMPONENTS.**
- **FLUID UNDER PRESSURE CAN PENETRATE THE SKIN AND CAUSE SEVERE INJURY. SEEK IMMEDIATE MEDICAL ATTENTION IF SKIN IS PENETRATED. CHECK HOSES AND FITTINGS USING A BOARD OR CARDBOARD; DO NOT USE HAND OR FINGER. ALWAYS WEAR EYE PROTECTION.**

HYDRAULIC OIL & FILTER

- Check hydraulic oil level **daily**, with engine off and cool, and replenish as necessary. A site glass is provided for easy viewing. If oil can be seen in glass, there is enough oil in the tank. Do not fill the tank more than 7/8 full; operating at high temperature will cause oil to expand and spill over if tank is full. Tank capacity is 9 gallons. Remember to replace and tighten the cap.
- The machine is equipped with Citgo AW32 hydraulic oil at time of manufacture; use the same or equivalent.
- Drain and replace hydraulic oil at least once a year, more often if oil is very dark or smells burnt. Discard used oil properly.

- Replace hydraulic filter every three to four months of normal use. More often if used under severe conditions. Use a 10-micron filter, available at most locations.
- Unscrew old filter and discard properly. Clean filter housing and install new filter, making sure old O-ring has been removed and new filter has a new O-ring in place. Screw in new filter hand tight only. Recheck oil level and refill if needed, as described above.

HYDRAULIC OIL COOLER
(only on remote control machines)

- There is a hydraulic oil cooler on all remote control machines to keep the hydraulic oil from over heating. There is a temp sensor in the bottom of the oil cooler and if the oil temperature rises to 140° or higher the fan comes on to cool the oil. The fan may go on and off as the temperature of the oil changes depending on the environment and the operation of the grinder.
- Keep the fins clean. Use a garden hose and a mild detergent. Do not use a power washer as it may cause the fins to bend. Do not use an industrial strength detergent that may cause the metal to deteriorate.
- Inspect all connections and hoses for leaks and wear. Replace if necessary. Use extra care when inspecting hoses with fluid under pressure. DO NOT use your finger or hand to inspect for leaks, use a board or cardboard. Follow all safety procedures at the beginning of the Servicing Hydraulics section.

REPLACING HYDRAULIC PUMP

- Engine must be shut off.
- Remove key & disconnect battery cable.
- Make sure that hydraulic oil is cool and that pressure is relieved from the lines.
- Disconnect hydraulic lines from pump and cap them, mark which line goes where to reconnect correctly.
- Remove bolts holding pump to engine.
- Replace pump and tighten bolts.
- Uncap and reconnect hydraulic lines paying attention to how they were marked.
- Recheck oil supply in reservoir, replenish if necessary.

HYDRAULIC HOSES & FITTINGS

- Inspect hydraulic hoses and fittings daily for leaks, tightness, wear, or damage. Repair or replace as needed.
- FLUID UNDER PRESSURE CAN PENETRATE THE SKIN AND CAUSE SEVERE INJURY. CHECK HOSES AND FITTINGS USING A BOARD OR CARDBOARD; DO NOT USE HAND OR FINGER. SEEK IMMEDIATE MEDICAL ATTENTION IF SKIN IS PENETRATED. ALWAYS WEAR EYE PROTECTION.

SAFETY

- **NEVER SERVICE A MACHINE WITH THE ENGINE RUNNING, SEVERE PERSONAL INJURY COULD OCCUR. TURN ENGINE OFF THEN REMOVE IGNITION KEY AND DISCONNECT POSITIVE BATTERY CABLE TO AVOID STARTING MACHINE ACCIDENTALLY.**
- **CUTTER WHEEL MUST BE DISENGAGED BEFORE TURNING ENGINE ON/OFF AND BEFORE SERVICING A MACHINE. OTHERWISE SEVERE PERSONAL INJURY COULD OCCUR AS WELL AS MACHINE DAMAGE.**
- **ALL MACHINE PARTS MUST COME TO A COMPLETE STOP AND HAVE TIME TO COOL COMPLETELY BEFORE SERVICING A MACHINE OR SEVERE INJURY COULD OCCUR, POSSIBLY SERIOUS BURNS AND/OR DISMEMBERMENT.**
- **PLACE THE CUTTER WHEEL ON THE GROUND WHEN PERFORMING SERVICE ON A MACHINE.**

- The most service you should have to do for the **bearing supported stub shaft** is to grease it properly. The bearing grease fitting is easily accessible behind the V-belt guard. Another grease fitting is on the end of the stub shaft to grease the splines in the coupling. Follow the instructions in the Machine Maintenance section for frequency and application of grease. Also see the Lubrication Chart.

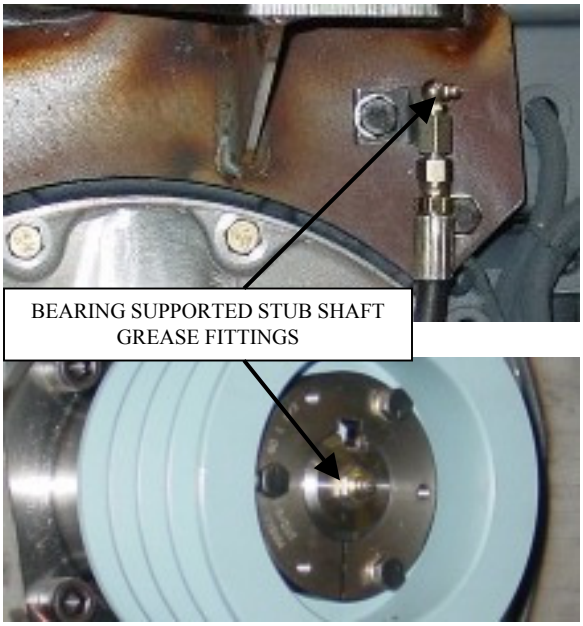

BEARING SUPPORTED STUB SHAFT GREASE FITTINGS

- If the bearing supported stub shaft should fail for any reason, these are the procedures for replacement. First remove the V-belt following the instructions in the Servicing Belt Section of the manual. Remove the engine belt keepers instead of just loosening the bolts and lay aside to put on new stub shaft plate assembly.

REMOVE V-BELT GUARD COVER AND FOLLOW INSTRUCTIONS FOR REMOVING V-BELT.

- Next you will need to remove the jackshaft sheave. Remove the bolts in the jackshaft sheave and screw them back into the empty threaded holes to push the sheave off the bushing and remove the bushing and sheave. Make sure to keep all machine parts and hardware together to make reassembly easier.

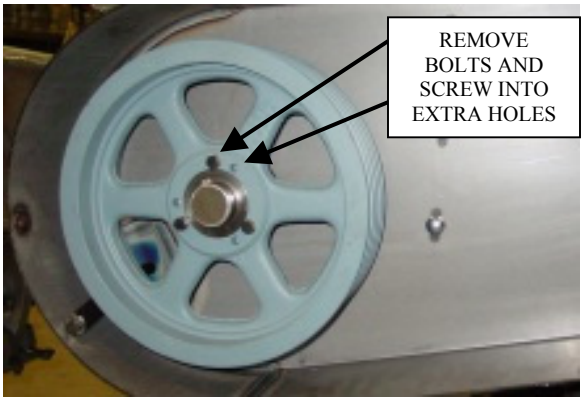

- Remove the bolts holding the belt guard onto the machine and remove the belt guard.

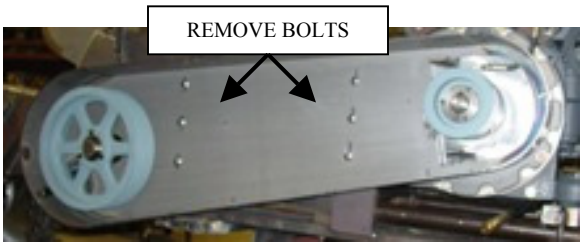

- Then remove the engine sheave. Remove the bolts in the engine sheave bushing and screw them into the extra threaded holes to push the bushing out of the sheave and remove the bushing and sheave.

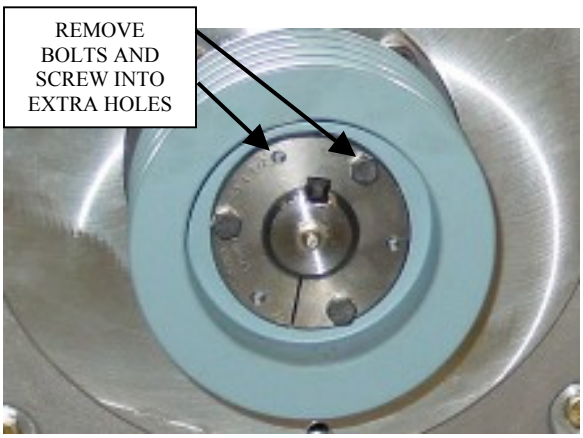

- Remove the bolt holding the extended grease fitting to the air filter bracket and remove the extension from the stub shaft.

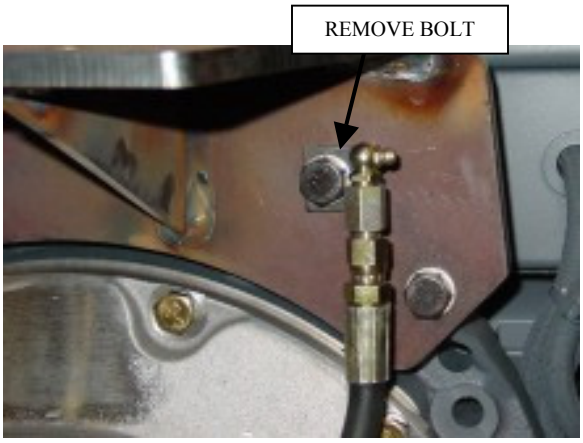

- You can now remove the bearing supported stub shaft plate. Remove the bolts holding the shaft plate to the engine. There are eleven 10MM bolts to remove. Pull the plate straight off.

- There are two threaded holes that can be used to push the shaft plate off the engine mount. Insert two of the bolts that were removed from the stub shaft plate and slowly screw them in until the plate breaks loose. Leaving a couple of bolts screwed in slightly may help to keep the assembly from dropping when separated from the engine.

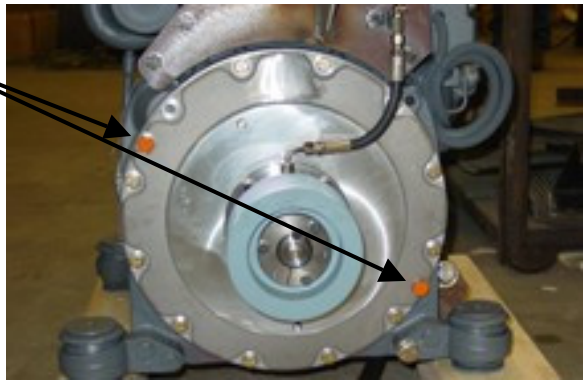

- Remove the coupling plate. There are eight 10MM bolts holding this plate to the flywheel. These bolts had LocTite® blue applied before installation.

- When parts have been removed, clean the engine flywheel with a cleaning solvent and check for burrs around the holes and on the surface of the flywheel. Use a very fine sand paper to remove any burrs.

- Replace any parts found defective or worn. Put stub shaft coupling plate onto the flywheel. The plate is attached using eight 10MM-1.5 x 20MM bolts with a lock washer. Put LocTite® 242 (blue) on the end of the bolt and lightly tighten all bolts. When all bolts have been inserted and lightly tightened, torque all bolts to 35 ft. lbs.

- Put anti-seize (coupling lubricant) on the inside of the coupling. Line up external splines with the coupling ID and slide the stub shaft plate into place.

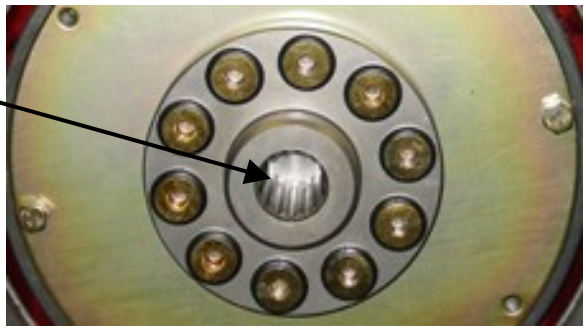

- Make sure the grease fitting is on the top of the assembly. Replace the 10MM-1.5 x 30MM bolts and torque to 35 ft. lbs. There are eleven bolts holding the plate to the engine.

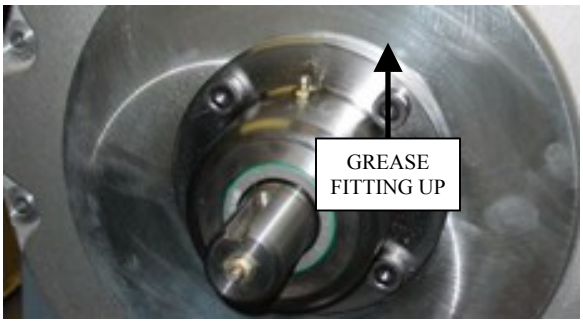

- Remove the grease fitting and replace with the grease fitting extension supplied with the machine.

- Bolt grease fitting to the air filter bracket.
- Before starting the engine, apply grease to the grease fitting until the pin on the opposite side of the stub shaft pops out. This must be done daily to protect the bearing in the stub shaft assembly.

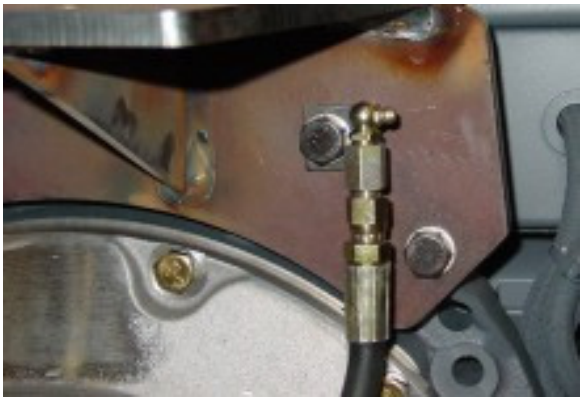

- Start replacing parts in the opposite order in which they were removed. Replace the V-belt guard and then replace the engine and jackshaft sheaves. Torque the bolts in the sheaves to 30 ft. lbs. It will be easier to bolt the belt keepers onto the stub shaft plate before you put the engine sheave on.

- Replace the V-belt and align the sheaves as instructed in the Servicing Belt Section of this manual. Adjust sheaves as necessary to get the proper belt alignment. Check belt tension and set as described in Servicing Belt section. Belt alignment and tension are very important for long bearing life. **Always replace belt guard cover before running the machine.**

RADIO CONTROL MACHINE DIAGRAM

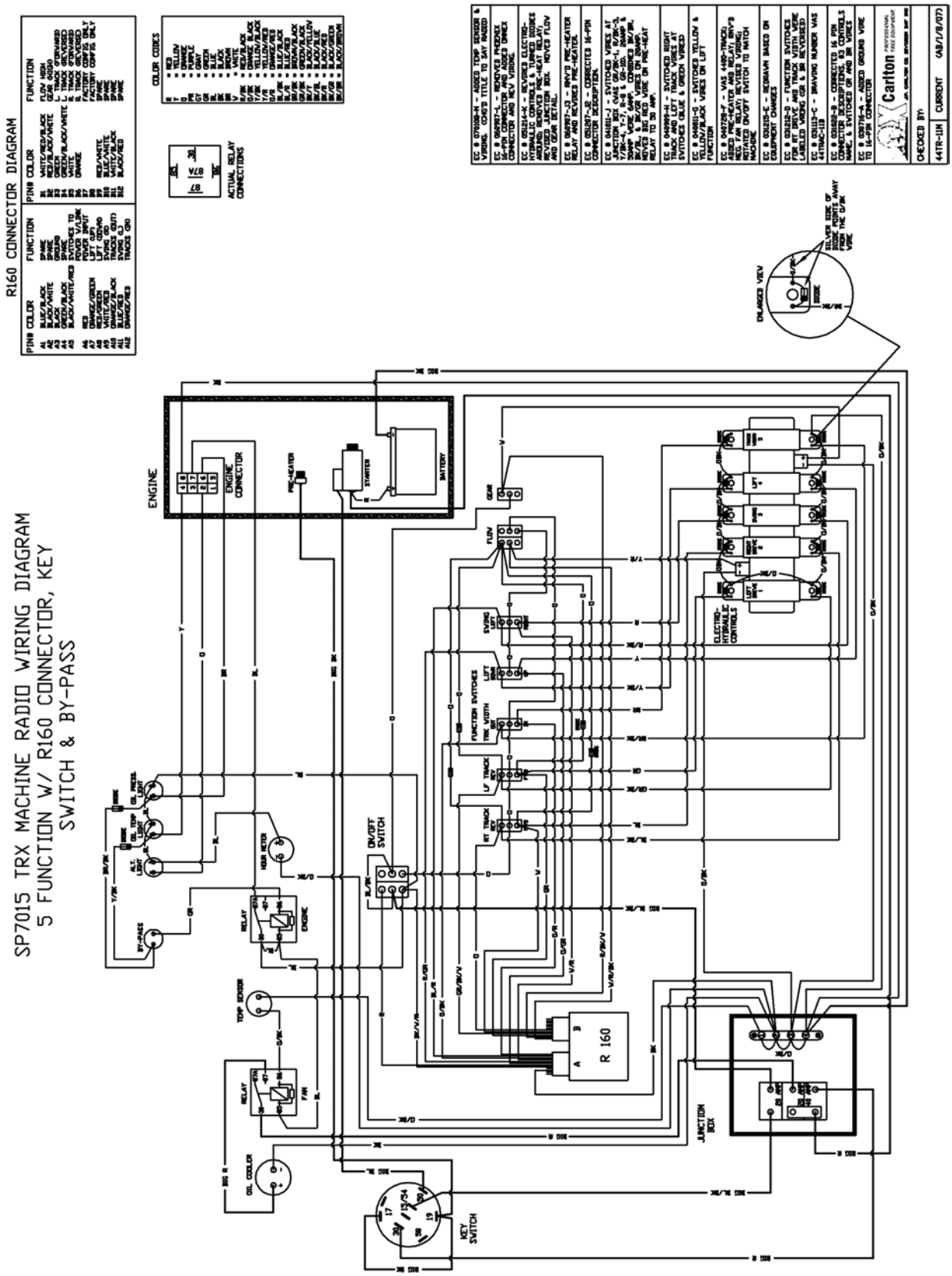

SEE RADIO CONTROL MANUAL,
INCLUDED IN THIS MANUAL,
FOR MORE INFORMATION.

TURNTABLE ASSEMBLY

ITEM NO	PART NO	DESCRIPTION	QTY
1	0500125	Turntable Bearing	1
2		5/8”-18 x 2 1/2” SHCS	18
3		5/8”-18 x 2 1/8” SHCS	2
4	0150156	5/8”-11 x 2 1/2” SHCS	18
5	0300105C	Hydraulic Cylinder - 3x4	2
6	0300105Q	Cylinder Pin - Captured	4
7	0150801	Hardened Bushing - 1”	4
8		1/4”-28 x 2” HHCS	8

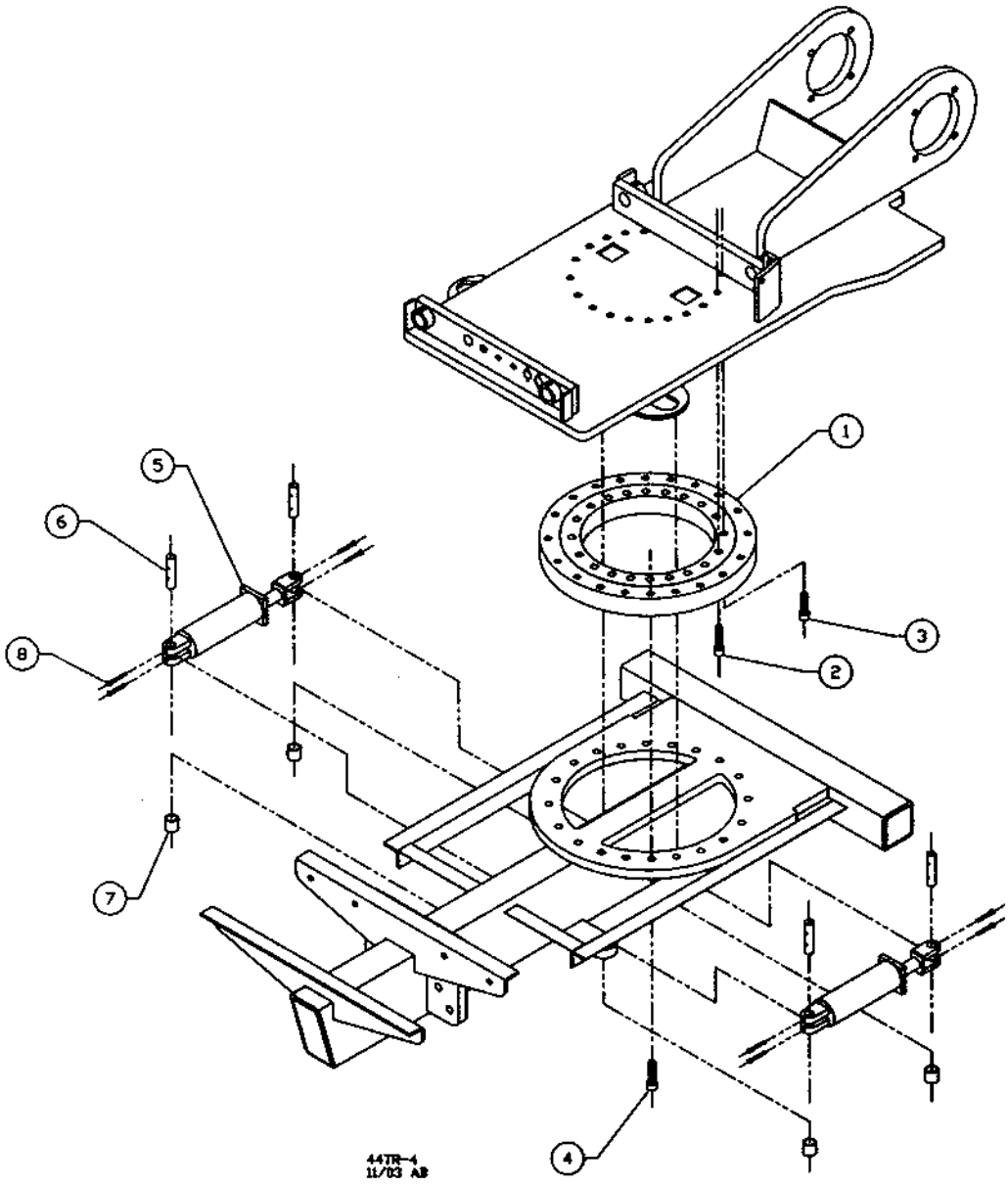

ENGINE SLIDE ASSEMBLY

ITEM NO	PART NO	DESCRIPTION	QTY
1	02001051	Engine - 60 HP Deutz Turbo Diesel	1
2		5/8”-11 x 4” HHCS	4
3	0150407	5/8” Lock Washer	4
4	4404113	Engine Slide Frame	1
5	4404110	Engine Slide Rod	2
6	0150104	3/8”-16 x 2 1/2” HH Bolt	4
7	0150207	3/8”-16 Lock Nut	4
8	4404155	Engine Slide Lock	1
9	0400212	Handle Grip – 1/2”	1
10	0150606A	Clevis – 1/2”-20 - LH	1
11	0150606	Clevis – 1/2”-20 - RH	2
12	4100154	Engagement Linkage	1
13	0150603	Clevis Pin – 1/2” x 1 3/8” (.15 dia. hole)	3
14	0150504	Cotter Pin – 1/8” x 1 1/2”	3
15	4100120	Engagement Handle	1
16	0150313	7/8” Flat Washer	1
17		Cotter Pin – 1/8” x 2 1/8”	1
18	0150618	5/8” Ball Joint – Male	1
19	0150125A	5/8”-11 x 2” HH Bolt	1
20	0150305	5/8” Flat Washer	1
21	0150216	5/8”-11 Lock Nut	1
22	0150619	5/8” Ball Joint – Female	1
23	0150151	14MM x 120MM HH Bolt	1
24		14MM Flat Washer	2
25		14MM Lock Nut	1
26	4404157	Slide Lock Brace	1
27	0150102	1/4”-20 x 1” HH Bolt	1
28	0150218	1/4"-20 Lock Nut	1
29	0150601	Grease Fitting 1/4"-28 - Straight	6
30	0150602	Grease Fitting – 1/4"-28 - 90°	2

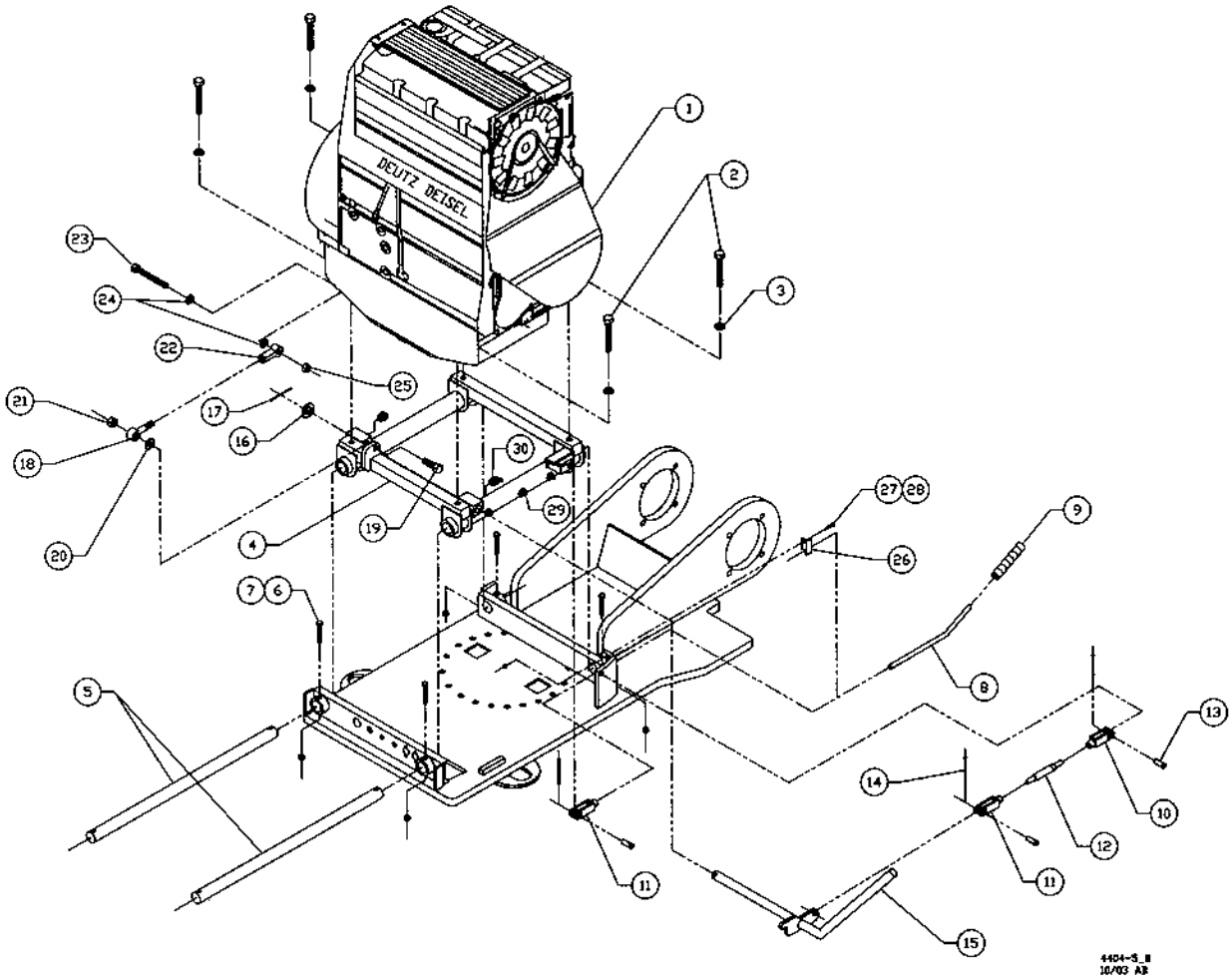
DEUTZ DIESEL
1
2
3
4
5
6
7
8
9
10
11
11
12
13
14
15
16
17
18
19
20
21
22
23
24
25
26
27
28
29
30
4404-5_II
10/03 A2

ENGINE BELT ASSEMBLY

ITEM NO	PART NO	DESCRIPTION	QTY
1	0400131	Engine Belt - 4B105	1
2	0250105	Sheave - 4B5.4	1
3	0250179	Bushing - SD 1 1/2”	1
4	0250104	Sheave - 4B12.4	1
5	0250122	Bushing - SK 1 11/16”	1
6	A160T013	Key - 3/8” Sq. x 1 7/8”	1
7	4404254	Engine Belt Guard	1
8	0150117	3/8”-16 x 1” Carriage Bolt	6
9		3/8” USS Flat Washer	16
10	0150207	3/8”-16 Lock Nut	6
11	4404257	Engine Belt Guard Cover	1
12	0150118	3/8”-16 x 1” HH Bolt	10
13	0150404	3/8” Lock Washer	12
14		V-Belt Keeper – Engine	2
15	—	Round Tubing - 7/8” OD x 1/2” ID x 4 3/4” Long	1
16		1/2”-13 x 6” SQHD	1
17	0150206	1/2”-13 Lock Nut	1
18	0150304	1/2” USS Flat Washer	1
19	0150303	3/8” SAE Flat Washer	6
20	050062	Stub Shaft Coupling Plate	1
21		10 MM-1.5 x 20 MM HHCS	8
22		10 MM Lock Washer	23
23	050061	Bearing Supported Stub Shaft	1
24		10 MM-1.5 x 30 MM HHCS	11
25		Grease Fitting Extension Unit	1
26	4404156	Air Filter Bracket Weldment	1
27		10 MM-1.5 x 35 MM HHCS	4
28	0200105F	Air Filter - Primary	1
29	0200105G	Air Filter - Safety	1
30	0200105H	Air Filter - Assembly	1
31	0150116A	5/16”-18 x 2” HH Bolt	2
32	0150303A	5/16” SAE Flat Washer	4
33	0150212	5/16”-18 Lock Nut	2
34	0150119B	3/8”-16 Hex Nut	2
35		3/8”-16 x 3” U-Bolt	1
36	0200192	2 1/2" Elbow Pipe	2
37		Pipe –2 1/2" ID x 2 1/2” Long	1
38		Clamp – 2 1/2"	2
39		Pipe –2 1/2" ID x 3” Long	1
40		Spacer	3
41		1/2”-13 X 1 1/4” HH Bolt	2
42		1/2” Lock Washer	2
43		1/2” SAE Flat Washer	2

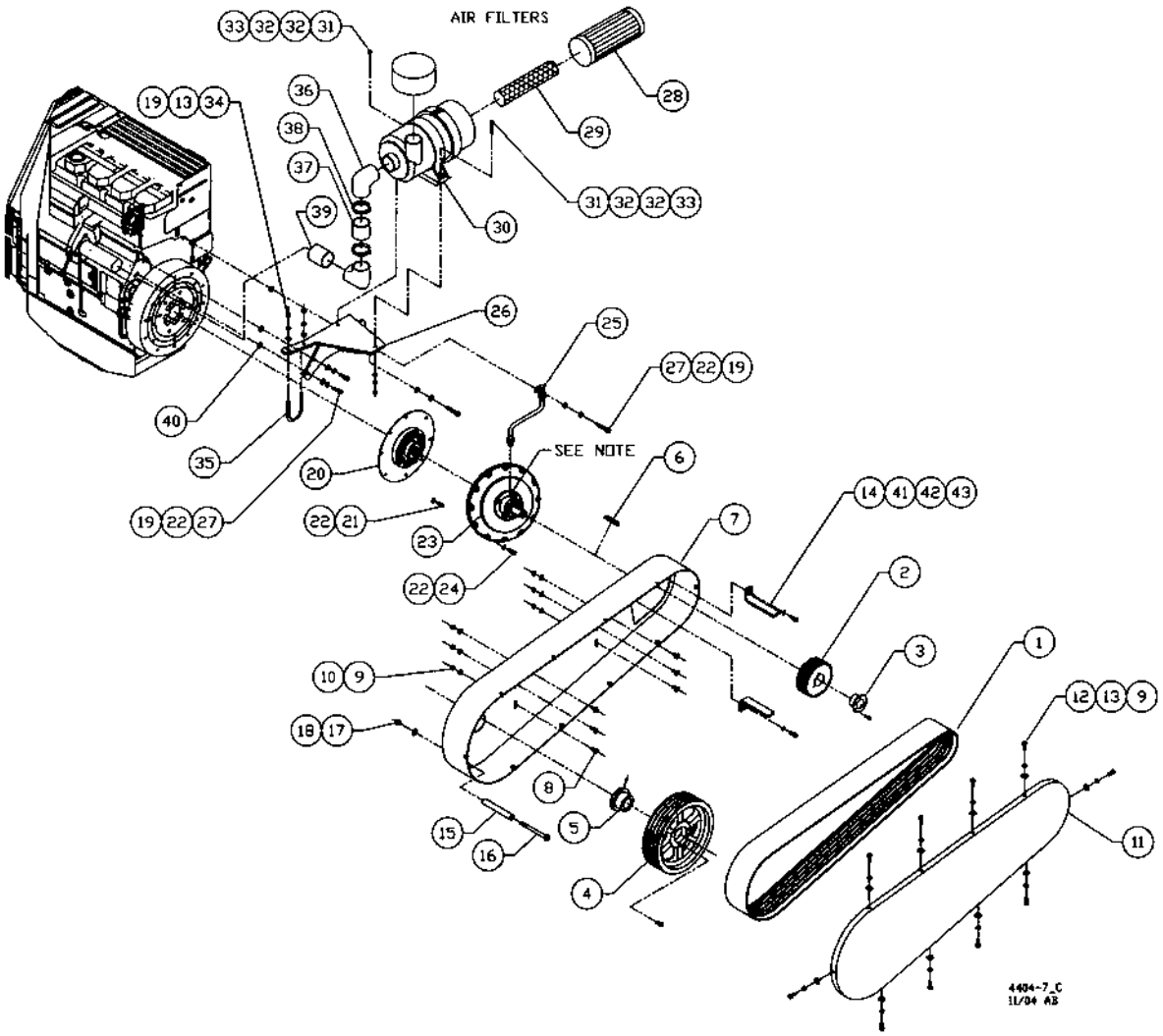

NOTE: Make sure the grease fitting is on top of the stub shaft assembly before bolting the stub shaft plate into place, as illustrated in the Servicing Stub Shaft Section of the manual. Remove the grease fitting on the new stub shaft and replace with the Grease Fitting Extension Unit (#25).

JACKSHAFT ASSEMBLY

ITEM NO	PART NO	DESCRIPTION	QTY
1	4404185A	Jackshaft – 1 11/16”	1
2	0500144	Outer Bearing – 1 11/16”	2
3	0500145	Inner Bearing – 2 15/16”	2
4		5/8”-11 x 3 1/2” SHCS	8
5	0150216	5/8”-11 Lock Nut	8
6	—	Key – 3/8” Square x 3 5/8”	1
7	A160T014	Key – 3/8” Square x 3”	1

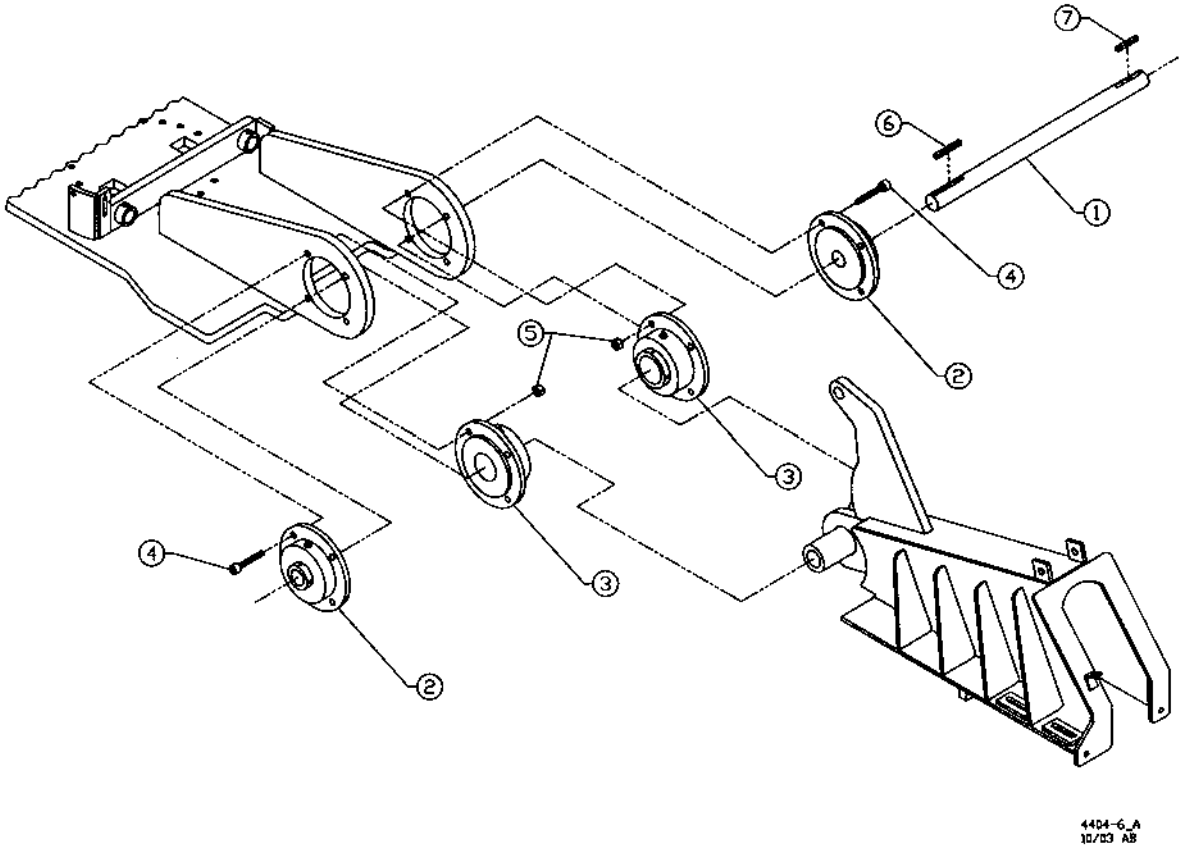

POLY CHAIN® ASSEMBLY

ITEM NO	PART NO	DESCRIPTION	QTY
1	3504196	Poly Chain® Guard	1
2		3/8”-16 X 1 1/2" Carriage Bolt	6
3	0150303	3/8” Flat Washer	15
4	0150207	3/8”-16 Lock Nut	4
5	0250115G	2517 Taper Lock bushing – 1 11/16”	1
6	0250115B	Sprocket – 14M-29S-68T – Jackshaft	1
7	0250115M	3020 Taper Lock Bushing – 2”	1
8	0250115C	Sprocket – 14M-40S-68T – Cutter Wheel	1
9	3504208	Poly Chain® Guard Bottom Cover	1
10	0150116	5/16”-18 x 1” HHCS	4
11	0150212	5/16”-18 Lock Nut	4
12	0400123	Poly Chain® Belt	1
13	3504204	Poly Chain® Guard Cover	1
14	0150103	3/8”-16 x 1” HHCS	9
15	0150404	3/8” Lock Washer	9

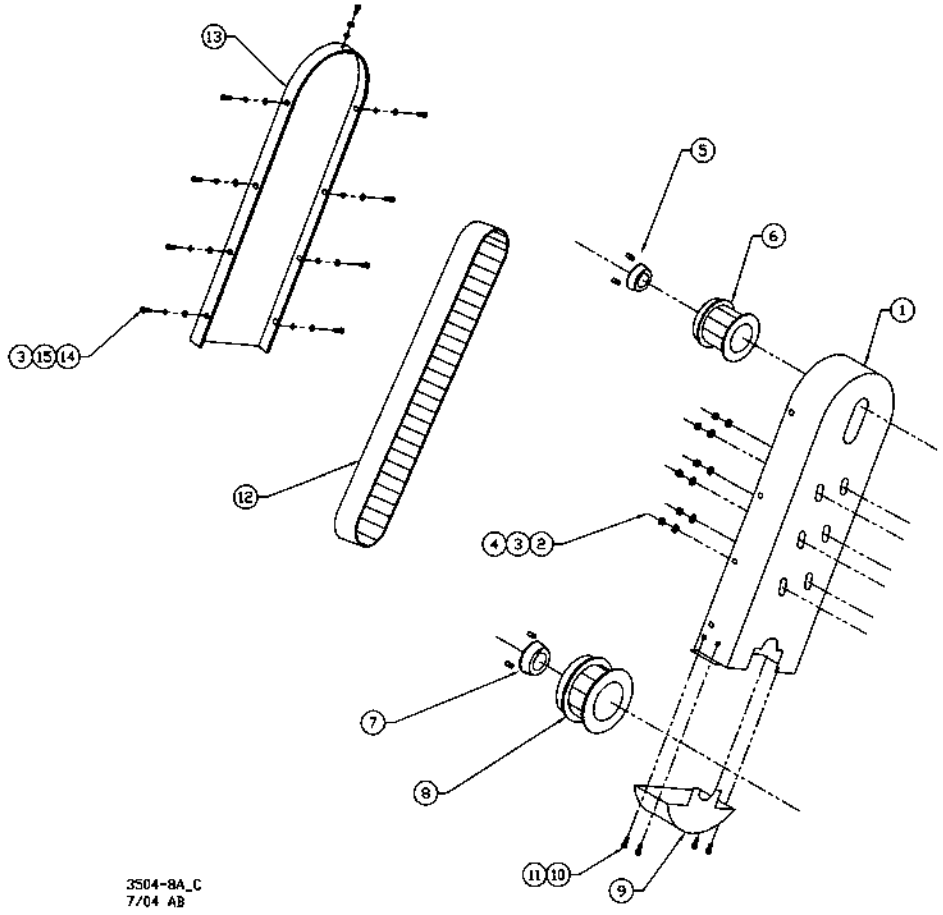

SP7015 *TRX* CUTTER WHEEL ASSEMBLY

ITEM NO	PART NO	DESCRIPTION	QTY
1	0450101	Tooth - Straight	2
2	0450102	Tooth - Right 45°	15
3	0450103	Tooth - Left 45°	15
4	0450109	5/8”-18 x 2 1/8” Tooth Bolt	32
5	0450104	Smart Pocket - C/S	16
6	0450105	Smart Pocket - Threaded	16
7	3500186A	Cutter Wheel	1
8	3500184B	Cutter Wheel Shaft – 35/44-4F	1
9	-	Key – 1/2” Square x 3”	1
10		1/2”-13 x 2 3/4” HH Bolt	6
11	0150314	1/2” Hardened Flat Washer	12
12	0150205	1/2”-13 Hex Nut	12
13	0500114	Bearing - 2”	2
14		5/8”-11 x 3 1/2” HH Bolt	4
15	0150305	5/8” Flat Washer	4
16	0150216	5/8”-11 Lock Nut	8
17	3500197	Shaft Washer	1
18	0150106	1/2”-13 x 1 3/4” HHCS	1
19	3500264A	Cutter Wheel Flap	1
20	0150160	3/4”-10 x 6” HH Bolt	1
21	0150211	3/4”-10 Lock Nut	1
22		1/2”-13 x 5” SQHD Bolt	2
23	0150205	1/2”-13 Hex Nut	8
24	0150406	1/2” Lock Washer	4
25	0150115	1/2”-13 x 4” SQHD Bolt	2
26	0150118	3/8”-16 x 1” HH Bolt	1
27	0150207	3/8”-16 Lock Nut	1

SP7015 *TRX* CUTTER WHEEL ASSEMBLY

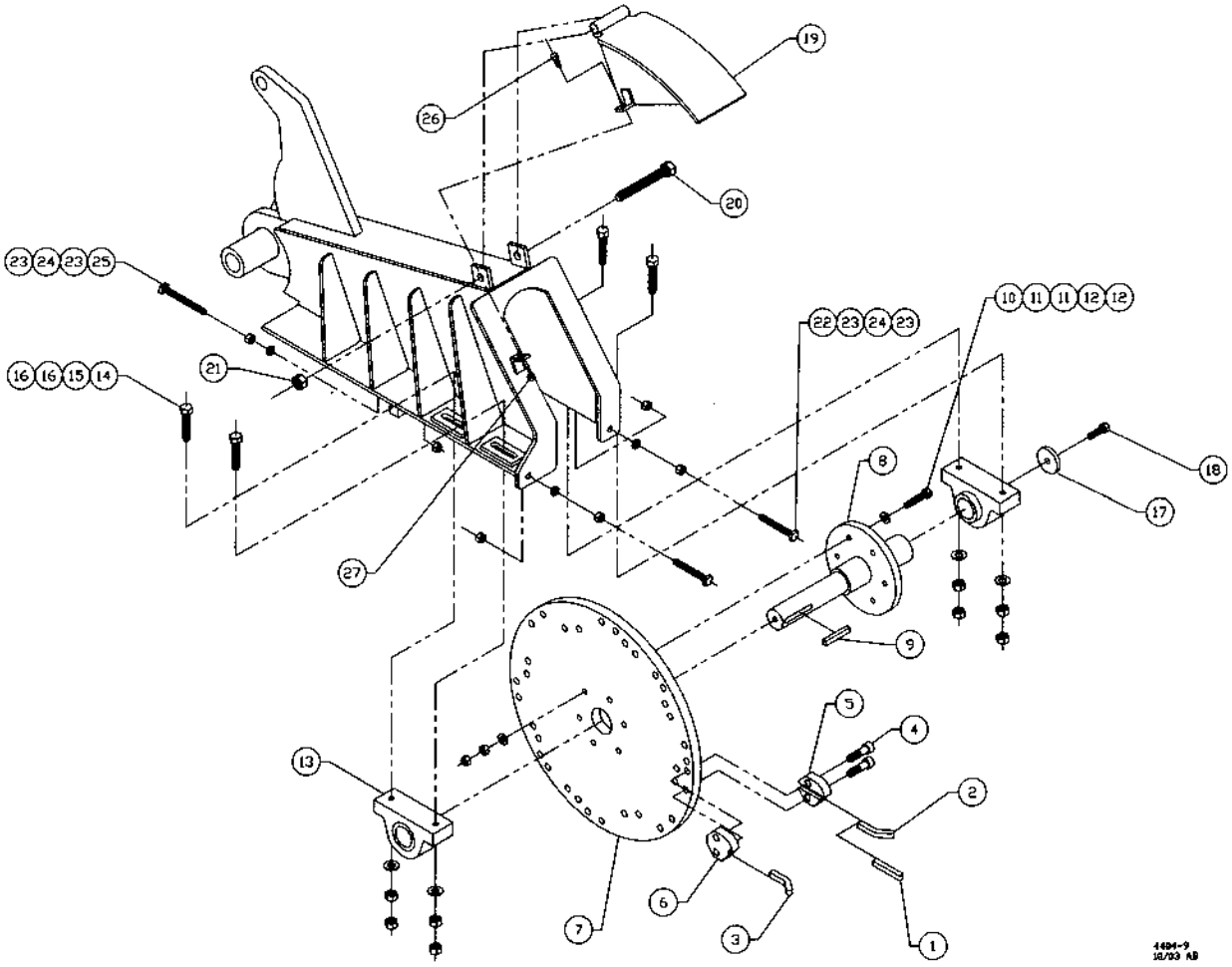

ITEM NO	PART NO	DESCRIPTION	QTY
1	44TR151	Chip Deck – Right Hand	1
2	44TR152	Chip Deck – Left Hand	1
3	4404172	Boom Chip Guard Bracket	1
4	0150117	3/8”-16 x 1” Carriage Bolt	13
5	0150303	3/8” Flat Washer	56
6	0150207	3/8”-16 Lock Nut	56
7		3/8”-16 x 1 1/4” Carriage Bolt	43
8	44TR311	Chip Guard – Chip Deck	2
9	4404313	Chip Guard – Pivot Table Left Side	1
10	4404315	Chip Guard – Pivot Table Under Side	1
11	4404316	Chip Guard – Boom/Pivot Table	1
12	4404314	Chip Guard - Boom Left Side	1
13	4404312	Chip Guard - Boom Right Side	1
14*	44TR321	Chip Guard Bracket Set – Chip Deck	2
15	4404323	Chip Guard Bracket – Pivot Table Left Side	1
16*	4404325	Chip Guard Bracket Set – Pivot Table Under Side	1
17*	4404326	Chip Guard Bracket Set – Boom/Pivot Table	1
18*	4404324	Chip Guard Bracket Set - Boom Left Side	1
19*	4404322	Chip Guard Bracket Set - Boom Right Side	1

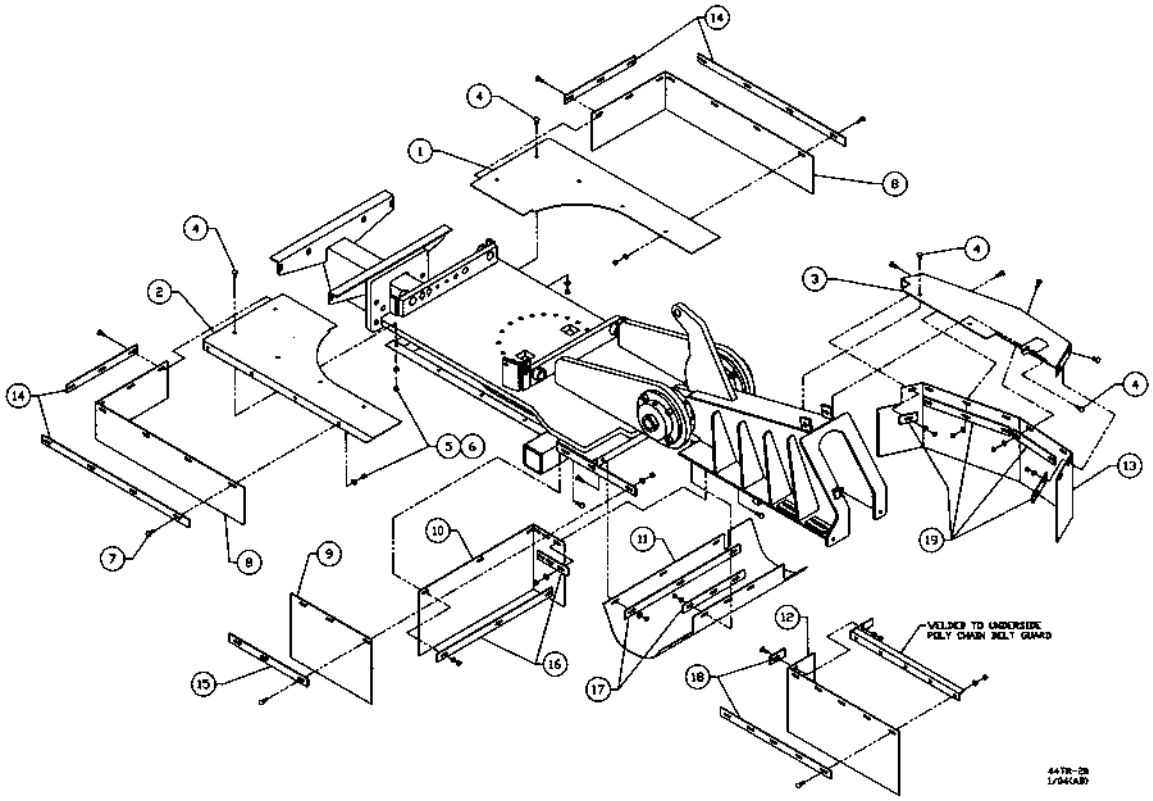

* Chip Guard Bracket Sets # 14, 16, 17, 18, & 19 include all brackets required for the guard as shown.

TRACK ASSEMBLY WITH EXPANSION

ITEM NO	PART NO	DESCRIPTION	QTY
1	0400244B1	PIN,CLEVIS-PINS	8
2	0400244B2	PIN,CYLINDER-CYL.ENDS	4
3	0400244B3	PIN,CYLINDER-ROD ENDS	4
4	0400244B	CYLINDER,HYDRAULIC	4
5		BOLT,M16_50	2
6		PLATE,COVER (fnl dr.)	2
7	0400244A	TRACK GROUP 42 LINKS W 230 WIDTH	2
8		WASHER (16) (c.roller)	2
9	0400244C	ROLLER, CARRIER (BO1)	2
10		VALVE,PROPORTIONING	1
11		SCREW BUTTON HD(1/4"-20 UNC)(SHEILDS)	52
12		FITTING,VALVE-37DEG JIC	1
13		BOLT,HEX HD(1/4-20 UNCX3.25)	2
14		SHIELD,RUBBER	2
15		NUT,FITTING-BULKHEAD	2
16		FITTING BULKHEAD 45DEG-37DEG JIC	2
17		DIRT SHIELD	2
18		CAP PLUG FOR 9/16" FITTING	2
19		BOLT,M14 35	16
20		PLATE,ASSY BACKING L SHAPED	2
21		PLATE,ASSY BACKING L SHAPED	2
22	0400244D	SPROCKET,(801) I=25	2
23	0400241	FINAL DR. PHV3B-35B-P-8480A	2
24		PLATE,ASSY BACKING	4
25	0400244E	SPRING ASSEMBLY COMPL. (B01)	2
26		CARBODY & SIDEFRAME AY & MTG PLTS	1
27		EYE.LIFTING	4
28		IDLER ASSEMBLY COMPL. (B01)	2
29		BOLT,SCKT HD CAP (M12X1.75X35)(sprckt)	4
30		BOLT,SCKT HD CAR(M12X1.75X40)(fnl dr.)	4
31		WASHER (15) (t. roller)	16
32	0400244G	ROLLER ASSEMBLY-TRACK	8
33		WASHER (13) (final dr. ;sprkt)	8
34		SCREW SCHCS. (M8X1.25X20)(cover access)	6
35		PLATE,COVER-ACCESS (carbody)	1
36		BOLT,HEX HD. (M8X16) (cover adj. fnl dr.)	10
37		PLATE,COVER- (adj)	2

TRACK ASSEMBLY WITH EXPANSION

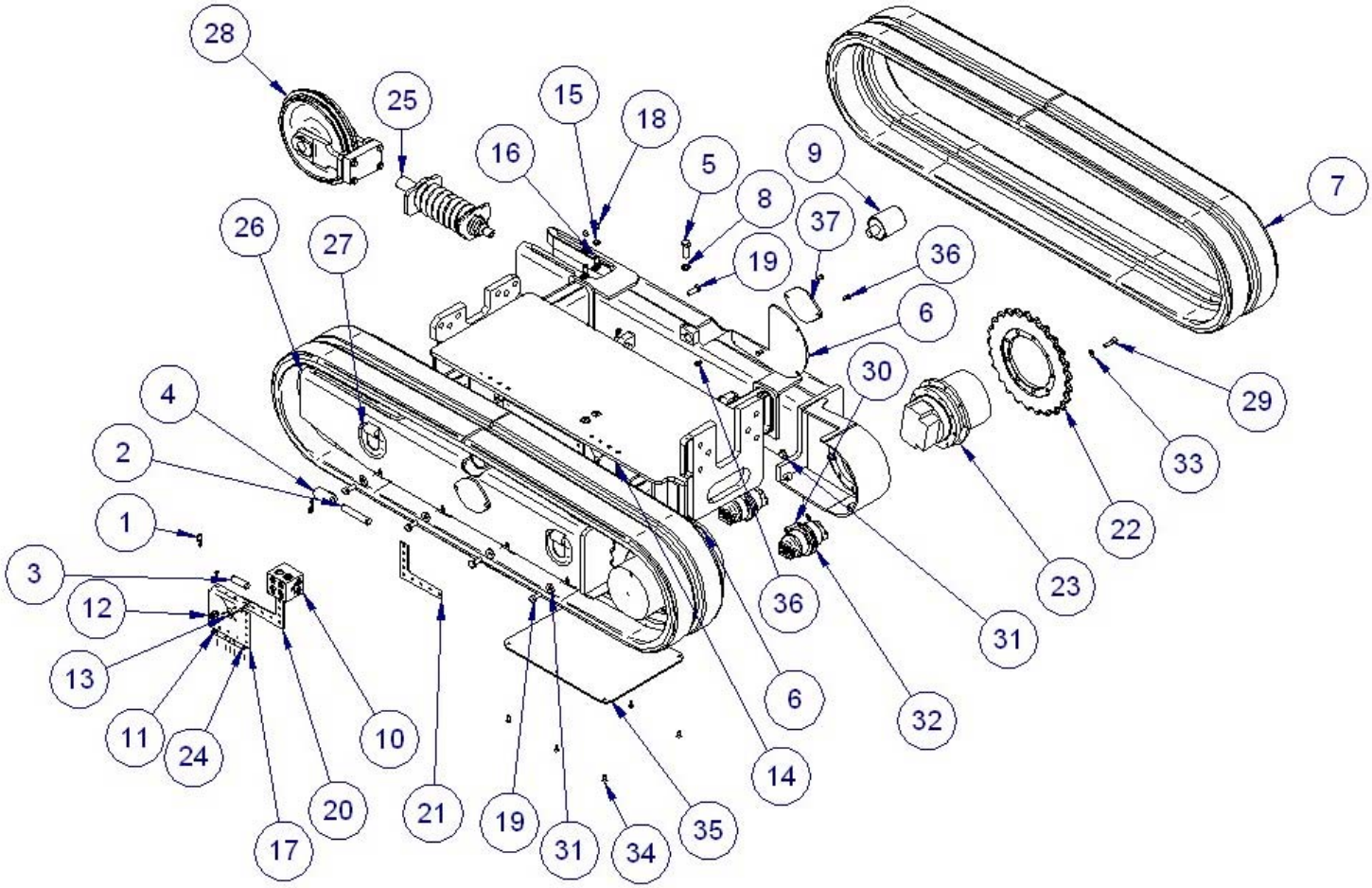

LARGE IDLER ASSEMBLY – 0400244F

ITEM NO	PART NO	DESCRIPTION	QTY
1		BOLT, M12X60	4
2	0400244F2	BRACKET, LARGE IDLER	1
3		WASHER, M12	4
4	0400244F1	IDLER, LARGE	1
5	0400244F3	BRACKET, CENTER, LARGE IDLER	1

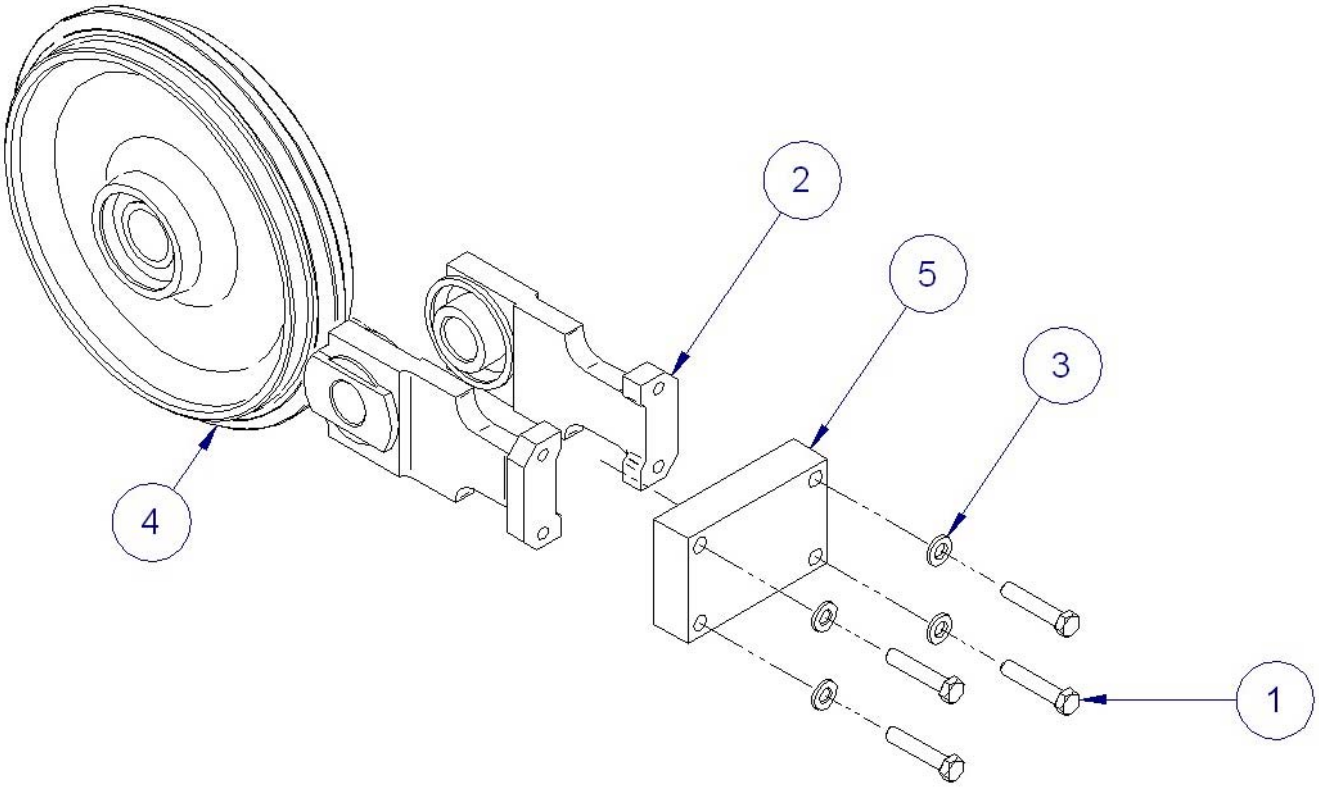

SPRING ADJUST ASSEMBLY- 0400244E

ITEM NO	PART NO	DESCRIPTION	QTY
1	0400244E1	BRACKET,SPRING	1
2		NUT	1
3	0400244E2	SPRING	1
4	0400244E3	WELDMENT,SPRING BRACKET	1
5	0400244E4	ROD,SPRING	1

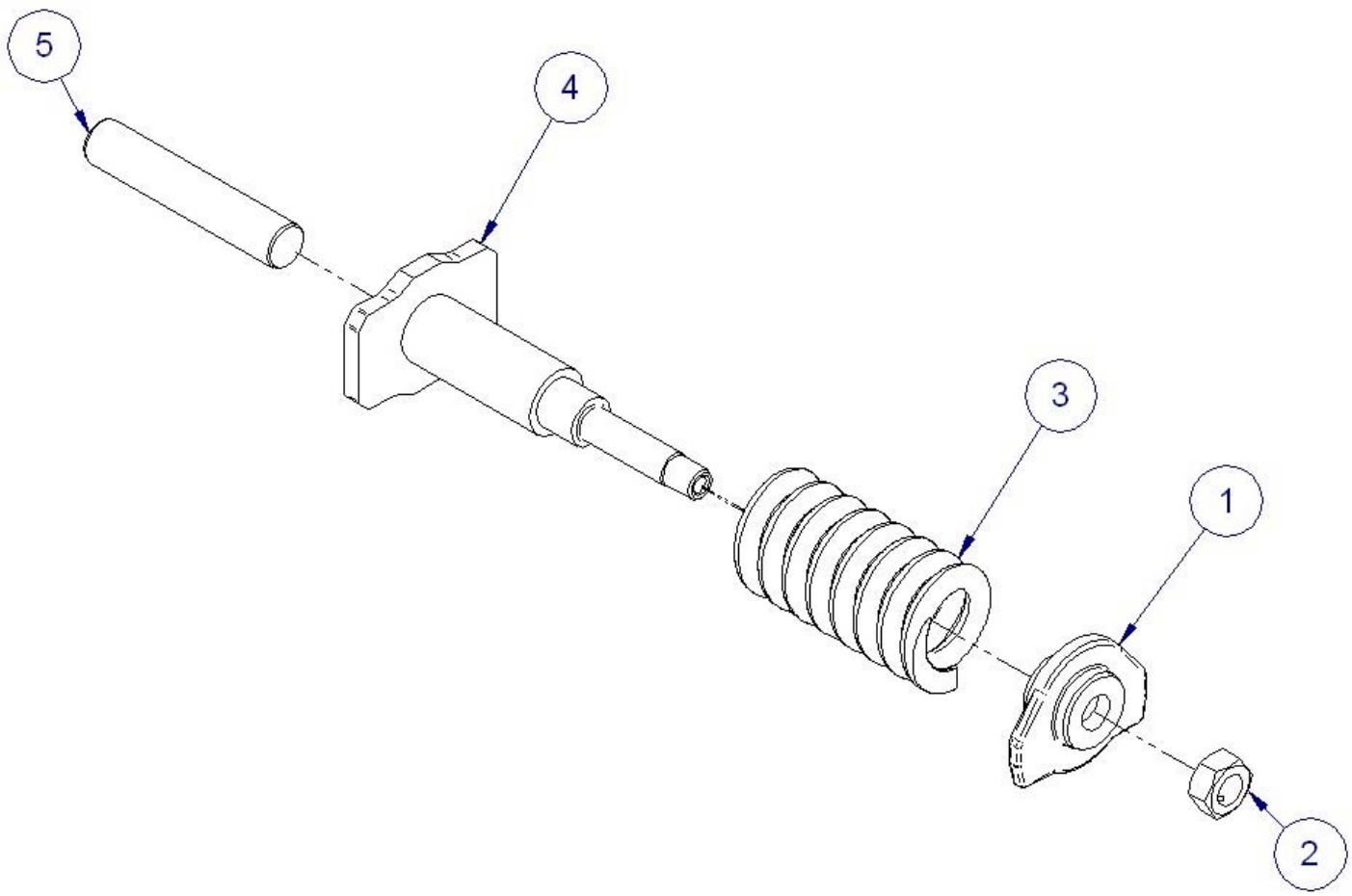

STUMP CUTTERS

MODEL	TYPE	ENGINE	HP	FUEL	CUTTING DEPTH	CUTTING HEIGHT	CUT SWING	NO. TEETH	WHEEL DIA.	WHEEL THICKNESS	TONGUE EXTENSION	WEIGHT (lbs.)
900H	Walk-Behind	Honda	13	Gas	9"	21"	N/A	12	12.25"	.5"	N/A	220
SP2000	Walk-Behind	Kohler	27	Gas	24"	27"	N/A	16	19"	.5"	N/A	695
SP4012	Self-Propelled	Kohler	27	Gas	13"	34"	40" arc	20	21"	1"	30"	1,550
	Self-Propelled	Briggs-Vanguard	35	Gas	13"	34"	40" arc	20	21"	1"	30"	1,650
	Self-Propelled	Lombardini	28.7	Diesel	13"	34"	40" arc	20	21"	1"	30"	1,650
SP7015	Self-Propelled	Deutz Turbo	60	Diesel	15"	43"	70" arc	32	26.5"	1"	N/A	3,500
SP7015TRX	Track-Mounted	Deutz Turbo	60	Diesel	15"	43"	70" arc	32	26.5"	1"	N/A	4,300
SP8018 TRX	Track-Mounted	Deutz Turbo	78	Diesel	18"	43"	80" arc	32	26.5"	1"	N/A	5,420
HURRICANE RS	Track-Mounted	John Deere Turbo	140	Diesel	25"	53"	360°	48	31"	1.5"	N/A	8,500
HURRICANE TRX	Track-Mounted	John Deere Turbo	140	Diesel	25"	72"	360°	64	36"	1.5"	N/A	12,000
	Track-Mounted	John Deere Turbo	175	Diesel	25"	72"	360°	64	36"	1.5"	N/A	12,000
	Track-Mounted	John Deere Turbo	250	Diesel	25"	72"	360°	64	36"	1.5"	N/A	12,000
3500D	Tow-Behind	Deutz Turbo	60	Diesel	15"	40"	80" arc	32	26.5"	1"	48"	2,900
7500	Tow-Behind	Deutz Turbo	78	Diesel	24"	46"	92" arc	48	31"	1.5"	60"	4,400

Call and ask about Carlton's line of Chippers or visit our website: www.stumpcutters.com

CARLTON—QUALITY PRODUCTS AND EXCEPTIONAL SERVICE

J.P. Carlton Company Div. DAF, Inc.
121 John Dodd Road
Spartanburg, South Carolina 29303
864-578-9335 • 800-243-9335 • FAX 864-578-0210

Carlton Owner's Manual
SP7015 TRX
Revised: 11/2007

OMNEX
TRUSTED WIRELESS

JP Carlton
SP8018TRX
SP7015TRX

Installation / Configuration Manual

T151 Transmitter

R161 Receiver

March 28, 2006

DM-R161-0006A

Revision 4

This page is intentionally left blank.

Table of Contents

System Overview 4
Features 4
T151 Dimensions and Controls 4
Installing the Receiver 5
Special Functions 6
Installation Considerations 6
Power the Transmitter 7
Test the Transmitter / Receiver Link 7
Download ID Code 8
Diagnostics—T151 Transmitter 10
Diagnostics—R161 Receiver 11
Trouble Shooting Guide 12
Parts & Accessories 16
Specifications 16
Warranty Information 16

NOTE: *These instructions are intended only for installing and operating the remote control equipment described here. This is not a complete Operator's Manual. For complete operating instructions, please read the Operator's Manual appropriate for your particular machine.*

Safety Precautions

READ ALL INSTRUCTIONS

CAUTION: Changes or modifications not expressly approved by the party responsible for compliance could void the user's authority to operate the equipment.

Failure to follow the SAFETY PRECAUTIONS may result in radio equipment failure and serious personal injury

Installation

PROVIDE A SAFETY CUTOFF SWITCH. If maintenance is required, the radio must be disconnected from power

USE PROPER WIRING. Loose or frayed wires can cause system failure, intermittent operation, machine damage, etc.

DO NOT INSTALL IN HOT AREAS. This apparatus can be damaged by heat in excess of 158° F (70° C)

Personal Safety

MAKE SURE MACHINERY AND SURROUNDING AREA IS CLEAR BEFORE OPERATING. Do not activate the remote system unless it is safe to do so.

TURN OFF THE RECEIVER POWER BEFORE WORKING ON MACHINERY. Always disconnect the remote system before doing any maintenance to prevent accidental operation of the machine

Care

KEEP DRY. Do not clean the transmitter / receiver under high pressure. If water of other liquids get inside the transmitter battery or receiver compartment, immediately dry the unit. Remove the case and let the unit air dry

CLEAN THE UNIT AFTER OPERATION. Remove any mud, dirt, concrete, etc. from the unit to prevent clogging of buttons, switches, etc. by using a damp cloth.

Maintenance / Welding

DISCONNECT THE RADIO RECEIVER BEFORE WELDING on this machine. Failure to disconnect will result in the destruction of the radio receiver.

System Overview

The **ORIGA T151 / R161** is a portable, long range, programmable radio remote control system. Designed as a compact and easy-to-use product, this member of the **ORIGA** family puts complete control of your crane where it's needed most, with the operator. It's robust, easy to install and has complete self-diagnostics. This system can be a simple cable replacement or add intelligence to make it a total crane control package. It's a radio, a PLC and a valve driver all in one.

The **ORIGA T151 / R161** system uses Frequency Hopping Spread Spectrum (FHSS) technology. FHSS devices concentrate their full power into a very narrow signal that randomly hops from frequency to frequency within a designated band. This transmission pattern, along with CRC-16 error-checking techniques, enables signals to overcome interference that commonly affects licensed radios.

The R161 receiver is designed to be powered from a 12VDC or 24VDC system. It features 19 solid state, low-side driver input / output controls and a reliable E-Stop control.

The T151 transmitter comes with 4 to 7 switches. It uses standard, long lasting AA batteries. Each T151 transmitter uses a unique ID code to ensure that no two systems will conflict at a job site.

Features

- FCC, ISC, CE approved
- License free
- 1200 foot range @ 900 MHz (900 ft. @ 2.4 GHz)
- Hand held / weatherproof / ergonomic
- Simple "wire-and-use" installation
- Resilient to impact and shock
- Available in both 900 MHz and 2.4 GHz
- Available with E-Stop for ensured operator safety
- Factory configurable for all custom applications.

R161 Receiver

NOTE: *SP8018TRX Transmitter Shown.*

T151 Transmitter

T151 Dimensions and Controls

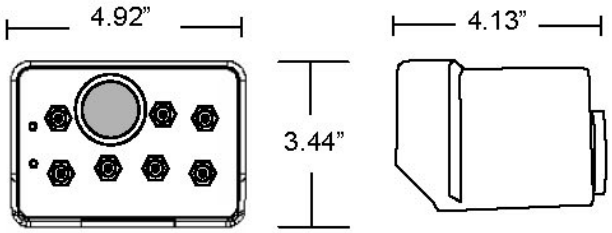

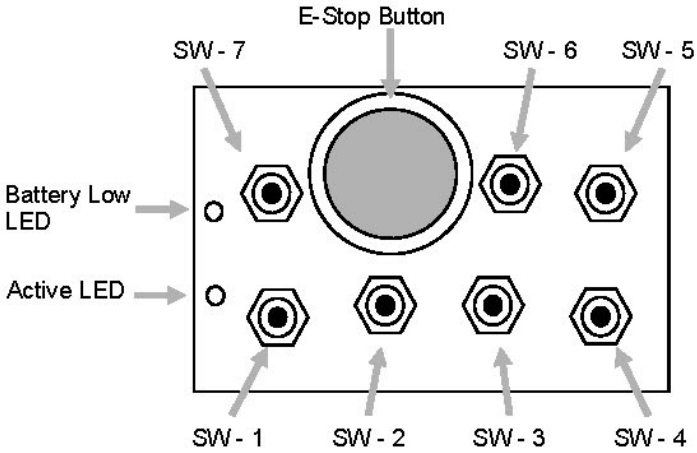

Installing the Receiver

Use the **Wiring Diagram** and the **Connector Diagram** below to connect the receiver pins directly to the appropriate contacts of the machine electronics. R161 Output Cables can be provided with every system to simplify the wiring process. The Wire Color column below only applies to the OMNEX Output Cable configuration. Tips on mounting, power connections and filtering are also provided under **Installation Considerations**.

Wiring Diagram

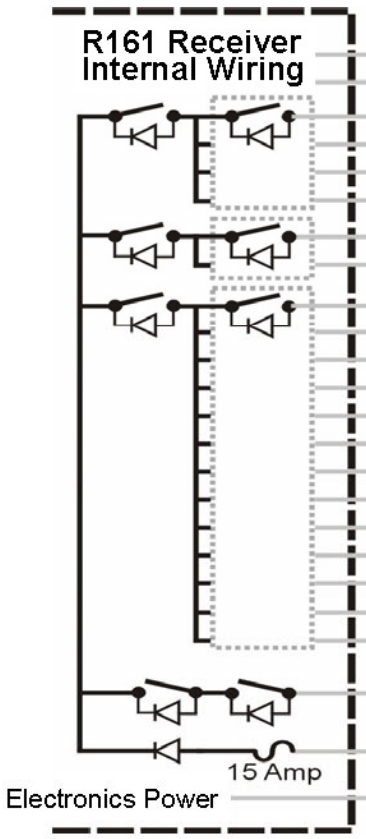

Pin-Output	Wire Colors	Functions
B7		Factory Configurable Only
B8		Factory Configurable Only
B12 - 19	Black/Red	Spare Input/Output
B11 - 18	White/Black	Spare Input/Output
B10 - 17	Blue/White	Spare Input/Output
A1 - 16	Blue/Black	Spare Input/Output
A2 - 15	Black/White	Spare Input/Output
A4 - 14	Green/Black	Spare Input/Output
B9 - 13	Red/White	Spare Input/Output
B6 - 12	Orange	R. Track Reverse
B5 - 11	White	R. Track Forward
B4 - 10	Green/Black/White	L. Track Reverse
B3 - 9	Green	L. Track Forward
B2 - 8	Red/Black/White	Gear High
B1 - 7	White/Red/Black	Flow High
A12 - 6	Orange/Red	Tracks In (7015TRX) / Blade Down (8018TRX)
A10 - 5	Orange/Black	Tracks Out (7015TRX) / Blade Up (8018TRX)
A11 - 4	Blue/Red	Cutter Head Left
A9 - 3	White/Red	Cutter Head Right
A8 - 2	Red/Green	Cutter Head Down
A7 - 1	Orange/Green	Cutter Head Up
A5	Black/White/Red	Switches to Ground with Link
A3	Black	Ground
A6	Red	Power Input (+9V to 30VDC)

Outputs: 19 solid state, high-side driver outputs, 5A max. each, total combined current 15A

Inputs: All output pins can be factory configured as inputs.

Connector Pin Assignments

Connectors as seen from under the receiver

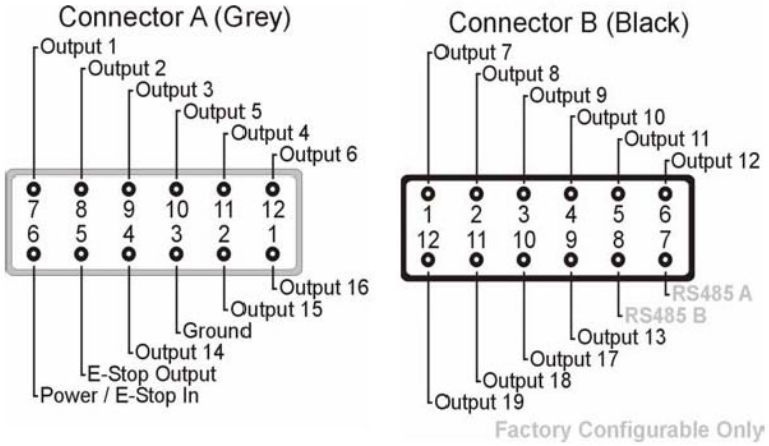

R161 Dimensions

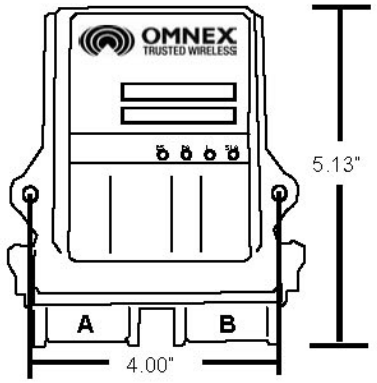

Special Functions

Note: The following functions are operational while the receiver has link with the transmitter. If link is not established, all receiver outputs will be unlatched (turned OFF).

Receiver outputs controlling the following functions turn ON momentarily while the corresponding transmitter switches are toggled:

- L. Track (Forward, Reverse)
- R. Track (Forward, Reverse)
- Tracks (In, Out) *
- Blade (Down, Up) **

Receiver outputs controlling CUTTER functions (Up, Down, Right, Left) turn ON momentarily while the corresponding transmitter switches are toggled and the FLOW mode is set to LOW.

The GEAR (High) output is latched ON when the GEAR switch is toggled once. The GEAR (High) output is unlatched (turned OFF) when the GEAR switch is toggled a second time.

If the FLOW (High) transmitter switch is toggled at any point of operation, the FLOW (High) output will be ON when any L. TRACK or R. TRACK receiver outputs are ON. When the FLOW (Low) switch is toggled, the FLOW (High) output will not be ON at any point of operation.

Pressing E-Stop will turn off the transmitter and immediately turn OFF (unlatch) all outputs.

* Applies to SP7015TRX System.
** Applies to SP8018TRX System.

Installation Considerations

Mounting and Installation

The receiver can be mounted by fastening two ¼" bolts through the two mounting holes in the unit's enclosure. When mounting, ensure that the receiver is oriented so that the text is reading right.

When selecting a mounting point for the receiver, it is recommended that the location require only a minimal length of wiring to connect it to the control panel, that it will be in a visible area where it has good exposure to the operator and that it is mounted on a surface that is protected from the weather and sustains minimal vibration. It is also recommended that the receiver have the best possible line of sight with the transmitter

Power Connections and Wiring

Whenever a power connection is made to an electronic device, it is a good practice to make both the Power (+) and Ground (-) connections directly to the Battery and avoid connecting the power from the charging side of existing wiring or making use of existing "ACC" or other peripheral connection points.

Make sure that wire of sufficient gauge and insulator type is used when connecting the outputs of the receiver to the control panel. Observe any component manufacturer's instructions and recommendations for proper integration of their product. This includes the power ratings and requirements of such components as relays, valves, solenoids, etc.

Be sure to test each of the outputs with a multi-meter prior to connecting the outputs to your end devices. This will ensure that each output has been programmed to operate in the manner required by each end device.

Filtering and Noise Suppression

Whenever a solenoid or electromagnetic switch is controlled by the receiver, it is a good practice to install a Diode across its terminals to ensure that surges and spikes do not continue back into the circuit. Appropriate 36V Bi-directional Diodes kits can be ordered under the OMNEX part number "AKIT-2492-01".

Power the Transmitter

When the receiver has been installed, install batteries into the transmitter and turn it on as explained below.

1. Install Batteries

Remove the battery cover on the back of the transmitter using a slotted screwdriver and insert 4 "AA" alkaline batteries. Orientation of the batteries is embossed inside the battery housing.

T151 Battery

NOTE: *For operation at temperatures below –10° C to –40° C, lithium batteries are recommended. Low temperatures reduce battery performance for both alkaline and lithium types. Refer to the battery manufacturer's specifications for detailed information on low temperature performance.*

2. Turn on the Transmitter

Refer to the **Light Legend** below for diagram details.

WARNING: do not install batteries backwards, charge, put in fire, or mix with other battery types. May explode or leak causing injury. **Replace all batteries at the same time as a fresh set and do not mix and match battery types.**

1. Press [E-Stop]

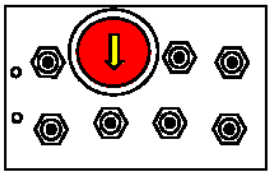

2. Press any switch

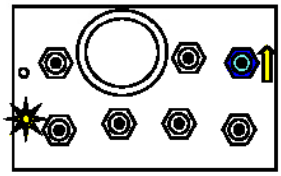

3. Twist Clockwise & Release [E-Stop]

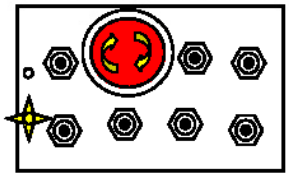

If the transmitter's (Active) light does not flash, check the battery orientation.

To turn off the transmitter, press the [E-Stop] button.

Test the Transmitter / Receiver Link

Follow these steps to ensure that there is a radio link between the transmitter and receiver.
Refer to the **Light Legend** below for diagram details

1. Press [E-Stop]

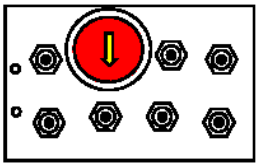

2. Power the R161

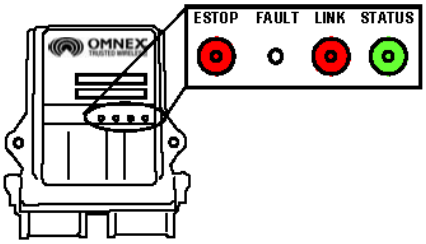

3. Power the T151

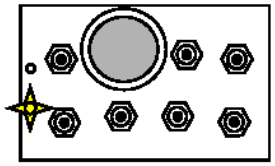

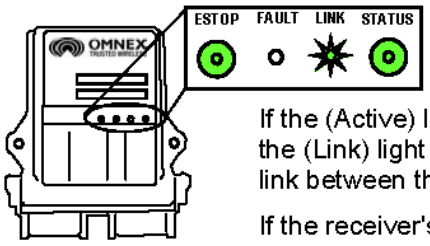

If the (Active) light on the transmitter is flashing and the (Link) light on the receiver is flashing GREEN, a link between the two exists.

If the receiver's (Link) light does not flash GREEN, follow the steps under **Download ID Code** below.

The ORIGA system is now ready for use.

Light Legend	Solid	Slow Flash	Fast Flash	Red Light	Green Light	Yellow Light	Alternating Red & Green Light

Download ID Code (Use in case of Link Test failure)

Follow these steps to download the transmitter's unique ID Code into the receiver. This will allow the receiver to establish a radio link with a specific transmitter or up to four transmitters (used individually). When downloading the first transmitters ID use step 4.1. and not 4.2.; for the remaining three transmitters use step 4.2. and not 4.1.

NOTE: *It is necessary to download the ID Code when replacing either the transmitter or the receiver.*

1. Opening the Receiver Case

The cap is held on by two plastic tabs at opposing sides, which can be unlatched as shown using a screwdriver. Once the cap is free, the R161 can slide open.

Use a small slotted screwdriver to press the Side Tabs inward.

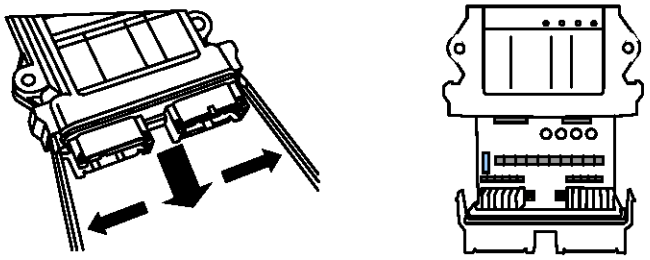

2. Prepare T151, Power R161

A. Press [E-Stop]

B. Twist clockwise & release [E-Stop]

C. Supply power to the receiver

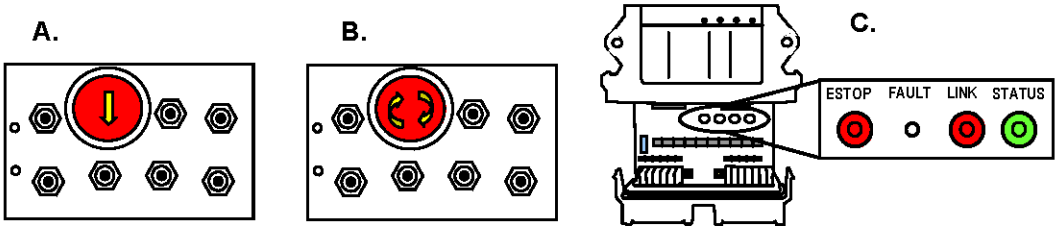

3. Power T151 into Configuration Mode

A. Hold [SW-5] switch UP

B. Press [E-Stop]

C. Twist clockwise & release [E-Stop]

D. Release [SW-5] Switch

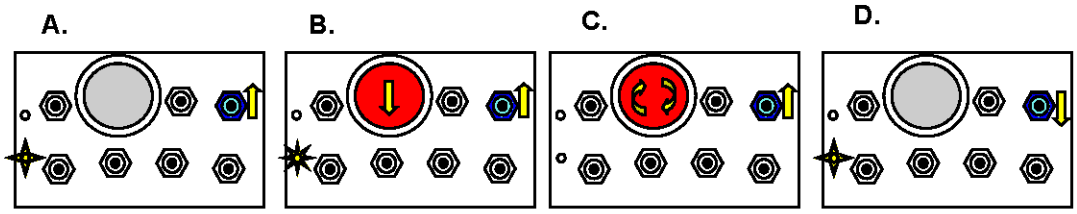

Light Legend	Solid	Slow Flash	Fast Flash	Red Light	Green Light	Yellow Light	Alternating Red & Green Light

Download ID Code (Con't)

4.1. Put Receiver into Setup

A. Press & hold [Setup] button until (Status) light goes from slow flash to fast flash

B. Release [Setup] button. (Status) light goes to solid GREEN, (Link) light turns off

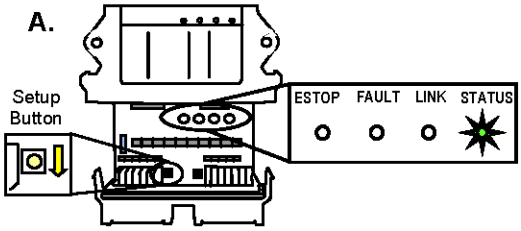

NOTE 1: *Programming the Primary ID will clear all other ID's already programmed into the receiver.*

NOTE 2: *If left idle in Setup Mode for over 30 seconds, the receiver will time out. The (Link) light and (Status) light will flash RED rapidly. To return to Setup Mode, repeat step 4.*

OR

4.2. Put Receiver into Setup Mode for Secondary ID's

A. Press & hold [Setup] button until (Status) light goes from slow flash to fast flash to medium flash (approx. 10 Sec.)

B. Release [Setup] button. (Status) light goes to solid GREEN, (Link) light turns off

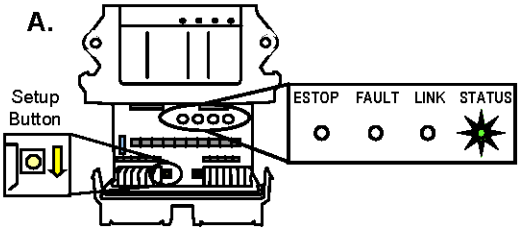

NOTE 1: *The Receiver will hold up to 4 Transmitter ID's. When the 5th Transmitter ID is downloaded, it's ID will replace the ID of the least recently used transmitter (i.e. The receiver will retain the ID's of the three transmitters that have been most recently linked).*

NOTE 2: *If left idle in Setup Mode for over 30 seconds, the receiver will time out. The (Link) light and (Status) light will flash RED rapidly. To return to Setup Mode, repeat step 4.*

5. Download ID Code

A. Press [SW-5] switch UP

B. (Link) light goes to GREEN. Once complete, (Link) light goes to RED as the transmitter turns off

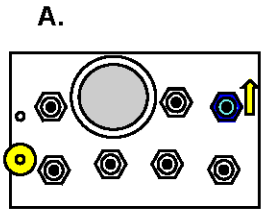

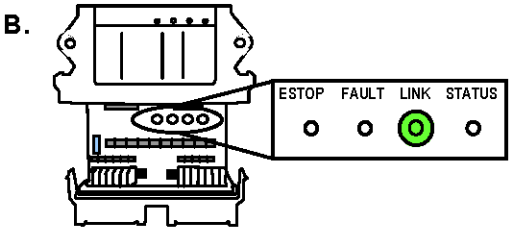

NOTE: *When replacing the receiver cover, ensure the cover snaps completely into place to create a weather proof seal around the base of the receiver.*

6. For multiple ID Downloading

A. Repeat steps 3-5, **using step 4.2. instead of 4.1.** for all remaining Transmitters. Then check the link of all Transmitters one at a time by following the instructions on page 7, Test the Transmitter/Receiver Link.

Light Legend	Solid	Slow Flash	Fast Flash	Red Light	Green Light	Yellow Light	Alternating Red & Green Light

Diagnostics—T151 Transmitter

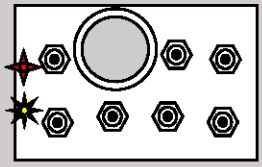	Low battery. Unit will run approximately 10 hours after Battery light starts flashing.
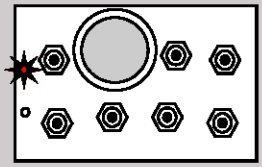	Flashing rapidly for 10 seconds indicates a transmitter failure.
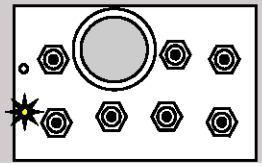	**Normal Operation** The Active light will flash several times per second, indicating that the transmitter is sending signals to the receiver. The Active light will remain on momentarily whenever a function changes
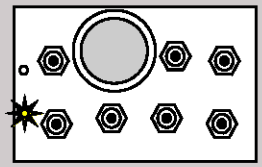	**On Power Up** Release the E-Stop button within 10 seconds to power up the transmitter, or the unit will power down.
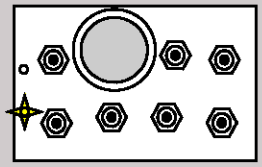	**Normal Operation** The transmitter is in Download Mode.
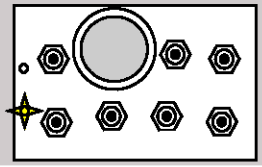	**On Power Up** Press and release the E-Stop button within 10 seconds to power up the transmitter, or the unit will power down.
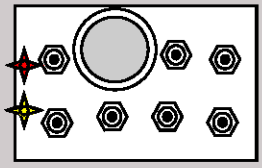	Stuck switch detected. Ensure that all switches are in a centered position. The transmitter will not power up when a function is ON.
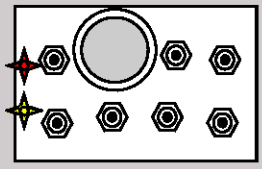	**On Power Down** Unit is still powered. Check for stuck switches, as the transmitter will not power down when a function is ON. Alternating flash means that the transmitter is in Calibration Mode.

Light Legend	Solid	Slow Flash	Fast Flash	Red Light	Green Light	Yellow Light	Alternating Red & Green Light

Diagnostics - R161 Receiver

Normal Operation

ESTOP FAULT LINK STATUS	Transmitter is OFF If the transmitter is off, the receiver is operating properly.
ESTOP FAULT LINK STATUS	Transmitter is ON When the transmitter is turned on, the Link light (fast flashing) and E-Stop (GREEN) indicates the receiver is operating properly
ESTOP FAULT LINK STATUS	Transmitter is in Operation When a function is activated on the transmitter, the Fault light will turn on GREEN. This indicates the receiver is operating properly
ESTOP FAULT LINK STATUS	Transmitter is OFF When a latched function is activated then the transmitter is turned off, the Fault light will stay on GREEN. If the system was intentionally designed this way, the receiver is operating properly, if not call for service.

Trouble Indicators

Note: *In some cases, the indicator lights will be different depending on whether the transmitter is on or off. Please note the transmitter status in the "Description" column for each case.*

Indicator Lights	Description	Solution
ESTOP FAULT LINK STATUS	Transmitter is ON The reason is the transmitter is not communicating with the receiver.	Refer to **Trouble Shooting Chart #3** for solutions
ESTOP FAULT LINK STATUS	Transmitter is ON A low battery condition has been detected.	To detect intermittent conditions caused by poor or corroded ground or power circuits, the GREEN light will continue to flash for 30 seconds after the condition has been removed.
ESTOP FAULT LINK STATUS	Transmitter is ON An internal fault with the E-Stop has been detected.	Inspect E-Stop wiring for short circuit. Disconnect E-Stop wire as close to the receiver output as possible. If the Status light changes to: • GREEN, a short occurs after disconnection point. • Stays flashing RED, send it in for service .
ESTOP FAULT LINK STATUS	Transmitter is ON A short to ground or excessive current draw on an output. It is most likely caused by a wiring fault.	Ensure transmitter is functioning properly, check status of each output connection: Press each function button and observe Fault Light. • If GREEN, everything is OK. • If RED, there is a short in that connection.
ESTOP FAULT LINK STATUS	Transmitter is ON The E-Stop output has been connected with one of the other outputs	Follow the wire and check for connections with other wires, disconnect to see if condition clears. If not, call for service.
ESTOP FAULT LINK STATUS	Transmitter is OFF A wiring short to the battery has been detected.	Refer to **Trouble Shooting Chart #1** for solutions
ESTOP FAULT LINK STATUS	Transmitter is OFF The receiver has detected an internal fault.	Refer to **Trouble Shooting Chart #1** for solutions
ESTOP FAULT LINK STATUS	Transmitter is OFF Blown fuse detected.	Refer to **Page 8** for instructions on how to open the receiver case to access fuse. Check wiring for shorts or bare spots. If fuses continue to blow, call for service.
ESTOP FAULT LINK STATUS	Transmitter is ON A setup failure has occurred.	Either hold the Setup button for 5 seconds to return to Setup mode or cycle power to return to the normal operating mode.
ESTOP FAULT LINK STATUS	Transmitter is OFF The receiver is powered incorrectly.	Most likely cause of this condition is that an output wire or the E-Stop wire has been connected to the power supply while the power wire is disconnected from the power supply.

Light Legend	Solid	Slow Flash	Fast Flash	Red Light	Green Light	Yellow Light	Alternating Red & Green Light

Test the Receiver—R161

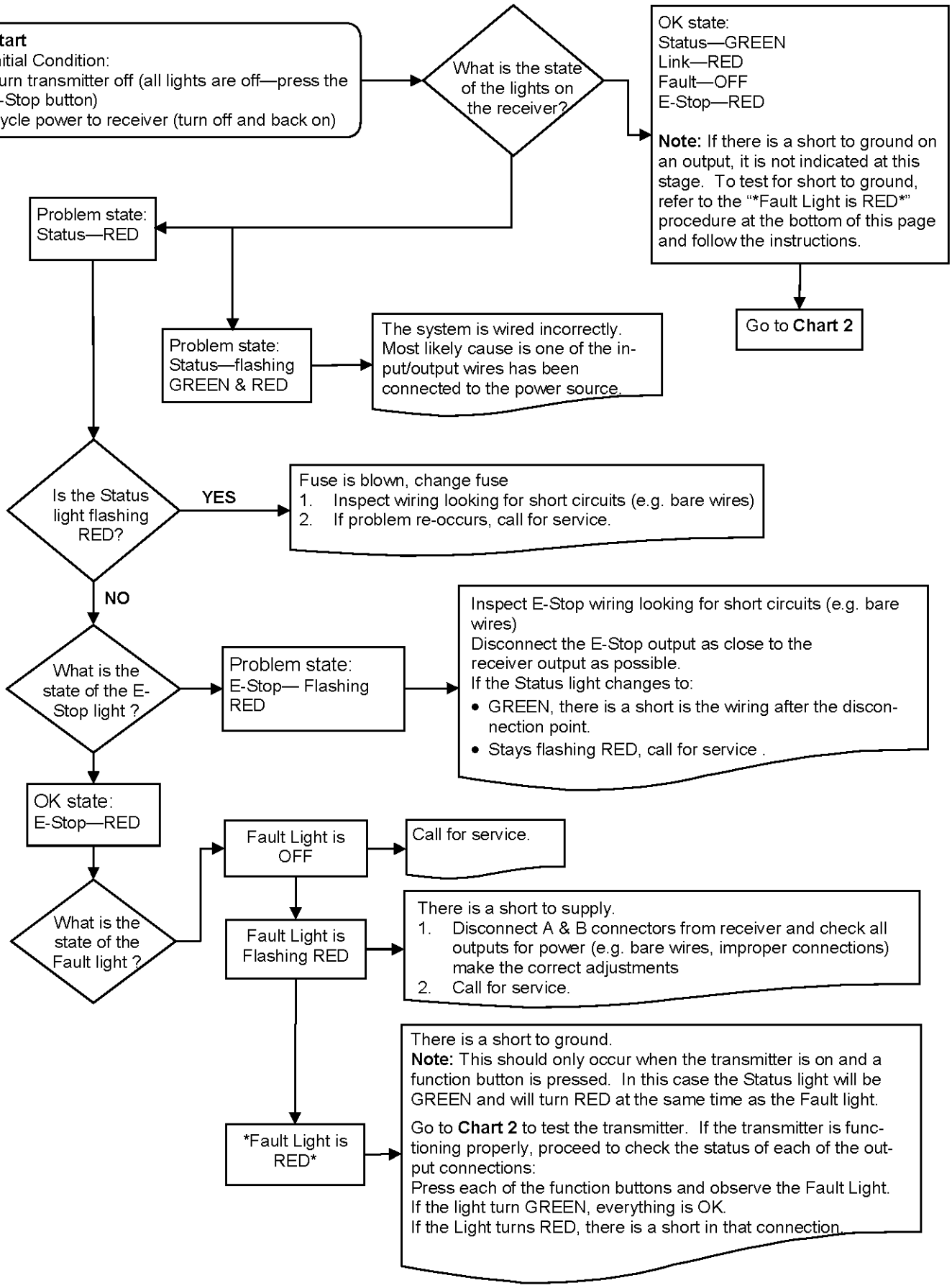

Test the Transmitter—T151

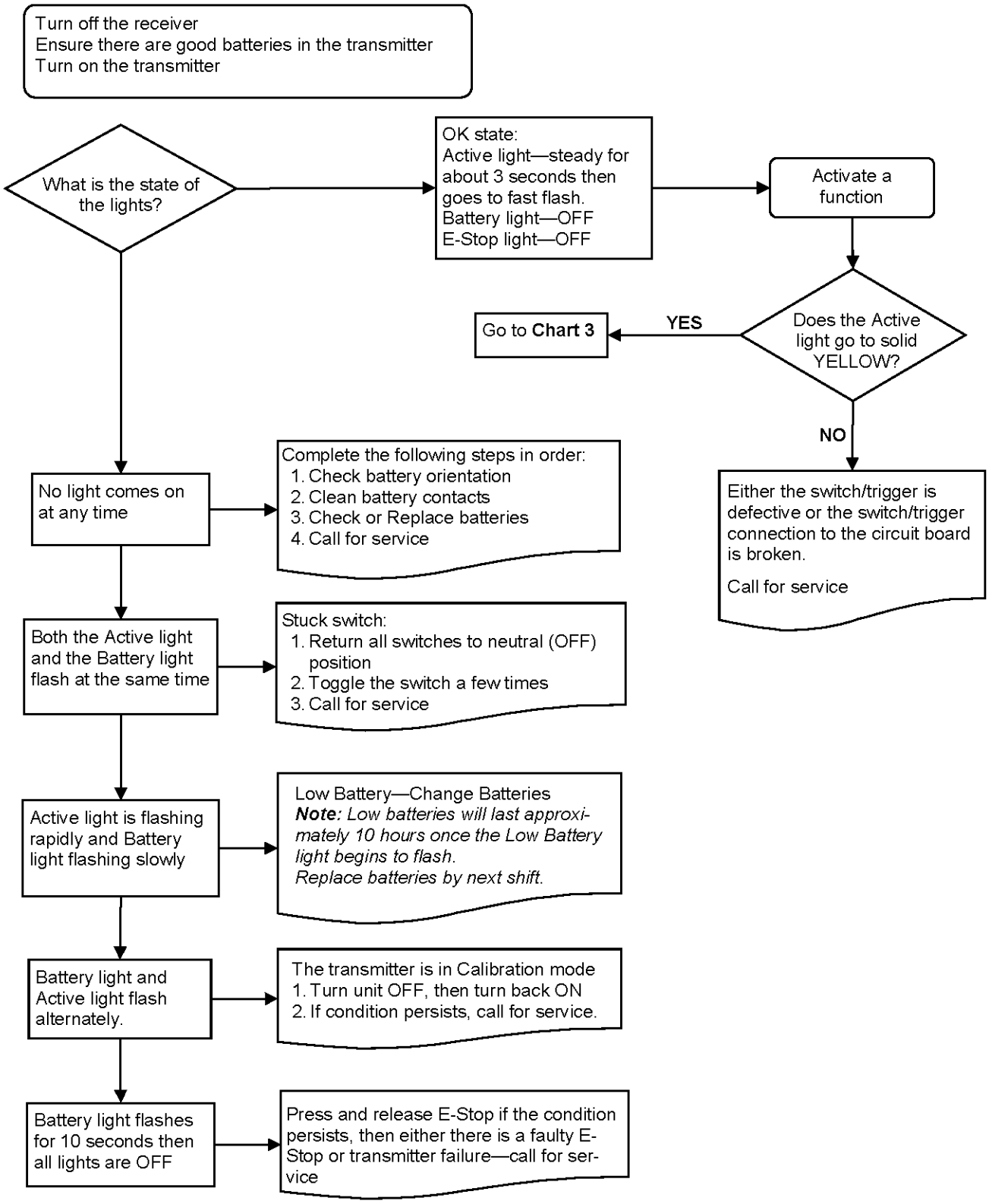

Testing the Transmitter / Receiver Communication

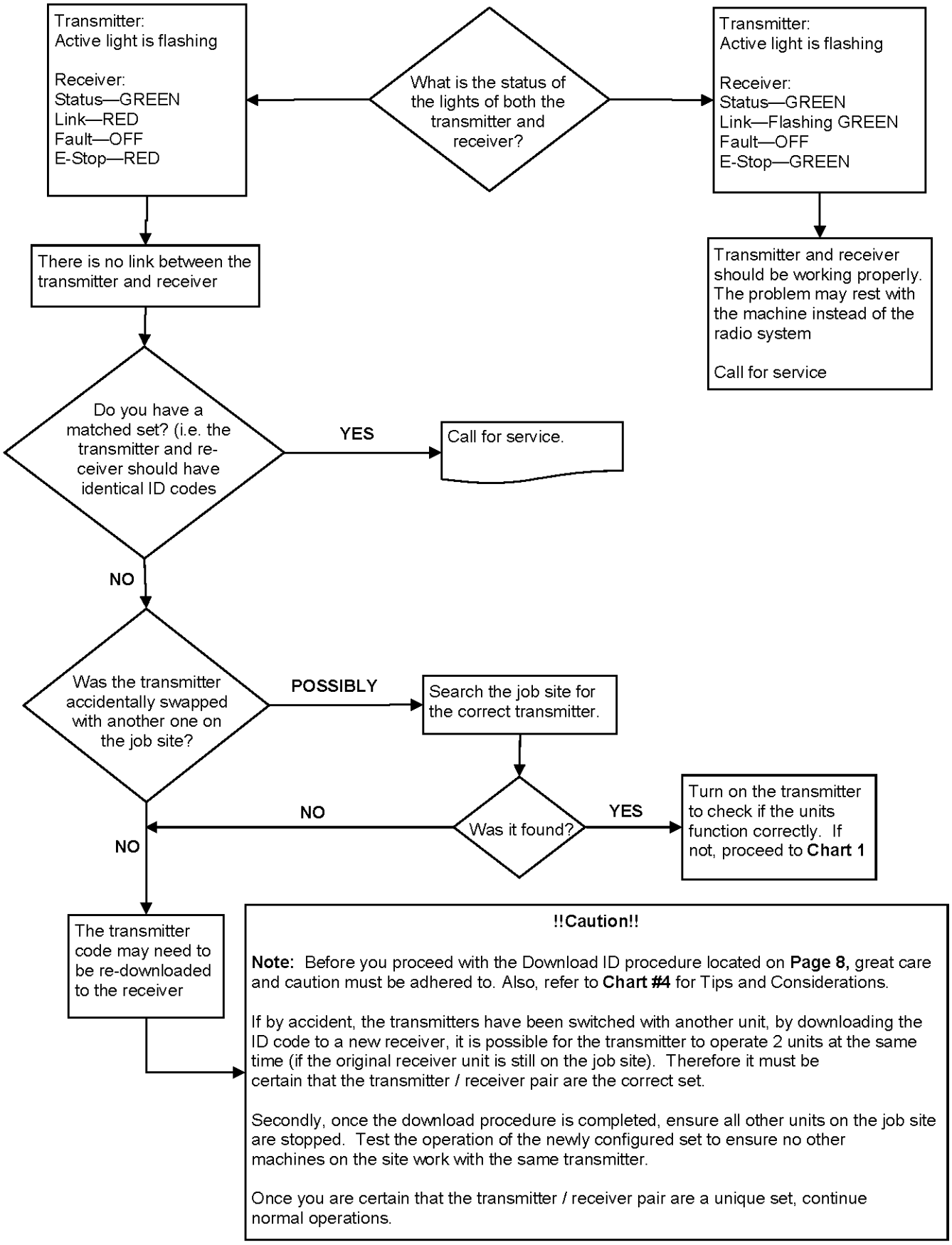

Considerations when Downloading the ID

Potential downloading issues

If testing of the receiver and transmitter both show the system as working (Chart 1 & 2), then the transmitter and receiver will both go into Download/Configuration mode.

Possible issues could arise during Step 4, the download phase of reprogramming. In this case there are 2 symptoms to look for:

1. The Link light on the receiver will not turn GREEN when the power switch is toggled on the transmitter to download
2. The receiver will "time out" indicating that it didn't receive a signal from the transmitter within the 30 seconds from the time the receiver was put into Setup Mode.

If all indications appear normal during the download phase, test the link by turning on the transmitter (note: the transmitter shuts off after transmitting the ID code in Step 4)

1. If the Link light on the receiver doesn't turn GREEN, the receiver didn't receive all of the information that was sent from the transmitter.

Possible Solutions

1. Try the Downloading steps again
2. If this doesn't correct the problem, send both the transmitter and receiver in for service.

Note: *you could try to determine whether the fault lies with the transmitter or receiver by completing the downloading procedure with a different transmitter. If this step works, then the fault lies with the original transmitter. If not, the fault may lie with the receiver.*

!!Caution!!

Note: Before attempting downloading with another transmitter, understand that reprogramming the receiver with another transmitter, could result in two receivers on the job site responding to the one transmitter. If the original transmitter was sent in for repair, Disconnect the receiver (disconnect connector A) to continue using the machine without remote capability and without fear of inadvertently operating the machine with the other transmitter.

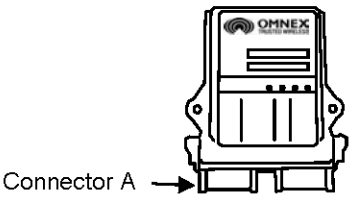

Reprogramming Tips:

1. Use a pointy instrument to depress the Setup button on the receiver (i.e. a pen) as the button is relatively small
2. Follow each step as laid out in the procedure
3. Never lay the receiver circuit board down on anything metallic (there are contact points on the back which could contact the metal and damage the receiver)

Parts & Accessories

Part	Part Number	Description
Batteries	B0010	4 x AA alkaline
Output Cables	ACAB 2493-01	Generic Output Cable- see illustration
Toggle Switch	AKIT-1504-04	Honeywell 1TL1-7
E-Stop Button	AKIT-1821-02	RAFIX16, 25mm, C&K 1.30074.2810300 See illustration
Magnet Back	AKIT-2498-02	see illustration
Bipolar Diode Kit	AKIT-2492-01	36V, Bi-directional, Motorols P6KE36CA
Fuse	F0039	Bussman ATC-15
Socket Connectors	J0418	Grey, 12-pin, Deutsch DTM06-12SA
Socket Connectors	J0419	Black, 12-pin, Deutsch DTM06-12SB
	J0420	12 pos., Deutsch WM12S
Pin	J0417	Female, Size 20, Deutsch 0462-201-20141
Sealing Plug	J0421	Size 20, Deutsch 0413-204-2005
Connector Kit	AKIT-2337-01	Includes Deutsch socket connectors, wedges, pins and sealing plugs.

Output Cable

E-Stop

Magnet Back

Specifications

	R161 Receiver	T151 Transmitter
Size	5.1" x 4.7" x 1.4" (130mm x 119mm x 36mm)	3.44" x 4.9" x 4.13" (87mm x 124mm x 105mm)
Weight	0.65lbs (0.295kg)	1.8lbs (0.817kg)
Construction	High impact plastic, weatherproof	High impact, low temperature plastic, weatherproof
Input Power	+9V to 30VDC	4AA alkaline batteries
Battery Life	N/A	160 hours (continuous use)
Operating Temperature Range	-40F to 158F (-40C to 70C)	-40F to 158F (-40C to 70C)
Outputs	3A (max) each (sourcing), 10A (max) each (combined)	N/A
Antenna	Internal	Internal
Approvals	**USA**- FCC part 15.247 **Canada**- ISC RSS 2210 **Europe**- EN 440 **Australia**- C-Tick	

FCC Rules and Compliance

This device complies with Part 15 of the FCC Rules. Operation is subject to the following two conditions: (1) This device may not cause harmful interference, and (2) this device must accept any interference received, including interference that may cause undesired operation.

FCC Part 15.247
ISC RSS 210

Warranty

OMNEX Control Systems Inc. warrants to the original purchaser that the OMNEX products are free from defects in materials and workmanship under normal use and service for a period of ONE YEAR, parts (EXCLUDING: SWITCHES, CRYSTALS, OR PARTS SUBJECT TO UNAUTHORIZED REPAIR OR MODIFICATION) and labor from the date of delivery as evidenced by a copy of the receipt. OMNEX's entire liability and your exclusive remedy shall be, at OMNEX's option, either the (a) repair or (b) replacement of the OMNEX product which is returned within the warranty period to OMNEX freight collect by the OMNEX APPROVED carrier with a copy of the purchase receipt and with the return authorization of OMNEX. If failure has resulted from accident, abuse or misapplication, OMNEX shall have no responsibility to repair or replace the product under warranty. In no event shall OMNEX be responsible for incidental or consequential damage caused by defects in its products, whether such damage occurs or is discovered before or after replacement or repair and whether or not such damage is caused by the negligence of OMNEX Control Systems Inc.

OMNEX Control Systems Inc.