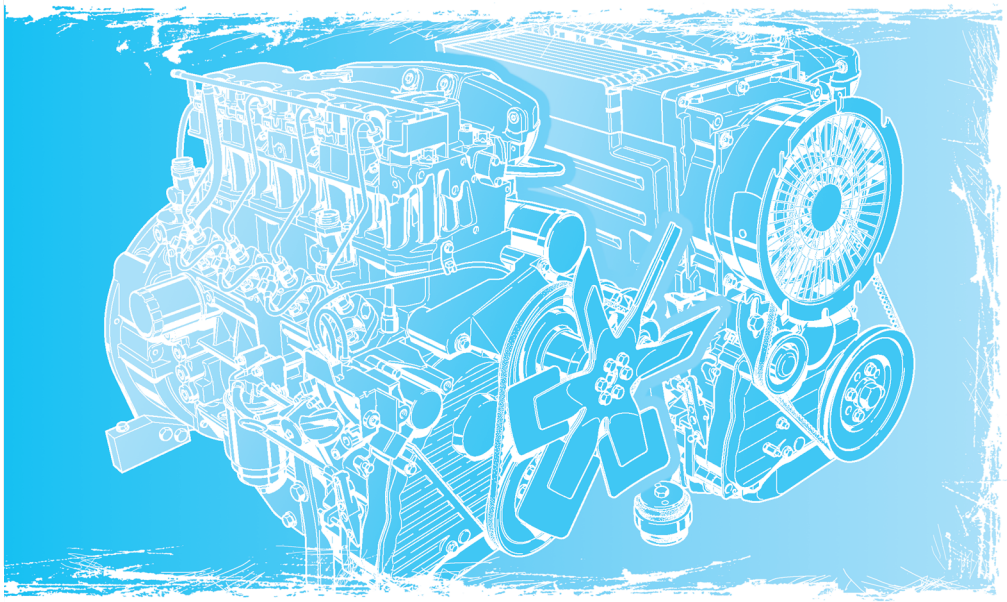

Operation Manual
2011

DEUTZ®

C 2000

9929en

Safety guidelines / Accident prevention

- Please read and observe the information given in this Operation Manual. This will enable you to avoid accidents, preserve the manufacturer's warranty and maintain the engine in peak operating condition.

- This engine has been built exclusively for the application specified in the scope of supply, as described by the equipment manufacturer and is to be used only for the intended purpose. Any use exceeding that scope is considered to be contrary to the intended purpose. The manufacturer will not assume responsibility for any damage resulting therefrom. The risks involved are to be borne solely by the user.

- Use in accordance with the intended purpose also implies compliance with the conditions laid down by the manufacturer for operation, maintenance and servicing. The engine should only be operated by personnel trained in its use and the hazards involved.

- The relevant accident prevention guidelines and other generally accepted safety and industrial hygiene regulations must be observed.

- When the engine is running, there is a risk of injury through:
  - turning/hot components
  - engines with positive ignition
  - ignition systems (high electrical voltage)

  You must avoid contact at all times!

- Unauthorized engine modifications will invalidate any liability claims against the manufacturer for resultant damage.
  Manipulations of the injection and regulating system may also influence the performance of the engine, and its emissions. Adherence to legislation on pollution cannot be guaranteed under such conditions.

- Do not change, convert or adjust the cooling air intake area to the blower.
  The manufacturer shall not be held responsible for any damage which results from such work.

- When carrying out maintenance/repair operations on the engine, the use of DEUTZ original parts is prescribed. These are specially designed for your engine and guarantee perfect operation.
  Non-compliance results in the expiry of the warranty!

- Maintenance and cleaning of the engine should only be carried out when the engine is switched off and has cooled down.
  You must ensure that the electrical systems have been switched off and the ignition key has been removed.
  Accident prevention guidelines concerning electrical systems (e.g. VDE-0100/-0101/-0104/-0105 Electrical protective measures against dangerous touch voltage) are to be observed.
  When cleaning with fluids, all electrical components are to be covered impermeably.

Engine Serial Number: | | | | | | | |

Please enter the engine serial number here. This number should be quoted when inquiring about Customer Service, Repairs or Spare Parts (see Section 2.1).

Technical modifications required to improve our engines are reserved with regard to specification data and other technical information contained in this Operation Manual. No parts of this Manual may be reproduced in any form or by any means without our written approval.

Operation manual
2011

0297 9929 en

DEUTZ®

C 2000

Foreword

Dear Customer,

Liquid-cooled Deutz engines are designed for a large number of applications. Consequently, a wide range of variants is offered to meet the requirements of specific cases.

Your engine is appropriately equipped for the installation concerned, which means that not all of the components described in this Operation Manual are necessarily fitted to your engine.

We have endeavoured to highlight any differences so that you will be able to locate the operating and maintenance instructions relevant to your engine quickly and easily.

Please read this Manual before starting your engine, and always observe the operating and maintenance instructions.

We are available to help with any additional inquiries

Sincerely,

DEUTZ AG

Contents

1. General

2. Engine Description
2.1 Model
2.1.1 Rating Plate
2.1.2 Position of the Rating Plate
2.1.3 Engine Serial Number
2.1.4 Cylinder Numbering
2.1.5 Fuel Delivery Lock
2.2 Engine Illustrations
2.2.1 Operation Side: Example FL 2011
2.2.2 Exhaust Side: Example FL 2011
2.2.3 Operation Side: Example BF4L 2011
2.2.4 Exhaust Side: Example BF4L 2011
2.2.5 Operation Side: Example FM 2011
2.2.6 Exhaust Side: Example FM 2011
2.2.7 Operation Side: Example BFM 2011
2.2.8 Exhaust Side: Example BFM 2011
2.3 Oil Circuit
2.3.1 Lube Oil Circuit Schematic
2.4 Fuel System Schematic
2.4.1 Fuel System
2.5 Coolant System
2.5.1 Coolant Plan

3. Engine Operation
3.1 Commissioning
3.1.1 Adding Engine Oil
3.1.2 Adding Fuel
3.1.3 Other Preperations
3.1.4 Additional Maintenance Work
3.2 Starting
3.2.1 Electric Starting
3.3 Monitoring Operation
3.3.1 Engine Oil Pressure
3.3.2 Engine Temperature
3.4 Shutting Off
3.4.1 Mechanical Shut-Off
3.4.2 Electric Shut-Off
3.5 Operating Conditions
3.5.1 Winter Operation
3.5.2 High Ambient Temperature, High Altitude

4. Operating Media
4.1 Lube Oil
4.1.1 Quality
4.1.2 Viscosity
4.2 Fuel
4.2.1 Quality
4.2.2 Winter-Grade Fuel

5. Service
5.1 Service Plan
5.2 Scheduled Maintenance Plan
5.3 Maintenance Chart
5.4 Maintenance Work Completed

6. Service and Maintenance
6.1 Lubrication System
6.1.1 Oil Change Intervals
6.1.2 Check Oil Level, Change Engine Oil
6.1.3 Changing Oil Filter
6.1.4 Clean/Replace Oil Filter (Cup)
6.2 Fuel System
6.2.1 Replace Fuel Filter
6.2.2 Clean/Replace Fuel Filter (Cup)
6.2.3 Clean Stainer of Fuel Filter
6.2.4 Change Fuel Leakage Line
6.3 Cooling System
6.3.1 Cleaning Intervals
6.4 Combustion Air Filter
6.4.1 Cleaning Intervals
6.4.2 Emptying Cyclone-Type Precleaner
6.4.3 Dry Type Air Cleaner
6.5 Belt Drives
6.5.1 Check V-belt
6.5.2 Tensioning Alternator Belts
6.5.3 Changing Alternator Belts
6.6 Adjustments
6.6.1 Check Valve Clearance, adjust if necessary
6.6.1.1 Valve Clearance Adjustment Schematic
6.7 Accessories
6.7.1 Battery
6.7.2 Rotary Current Alternator
6.7.3 Transportation Shackles
6.8 Engine Cleaning
6.8.1 Engine Cleaning

Contents

7. Faults, Causes and Remedies
7.1 Fault Table

8. Engine Preservation
8.1 Preservation
8.1.1 Preserving Engine
8.1.2 Removing Engine Preservatives

9. Technical Specification
9.1 Engine Specifications and Settings
9.2 Torque Wrench Settings
9.3 Tools

10. Service

C 2000

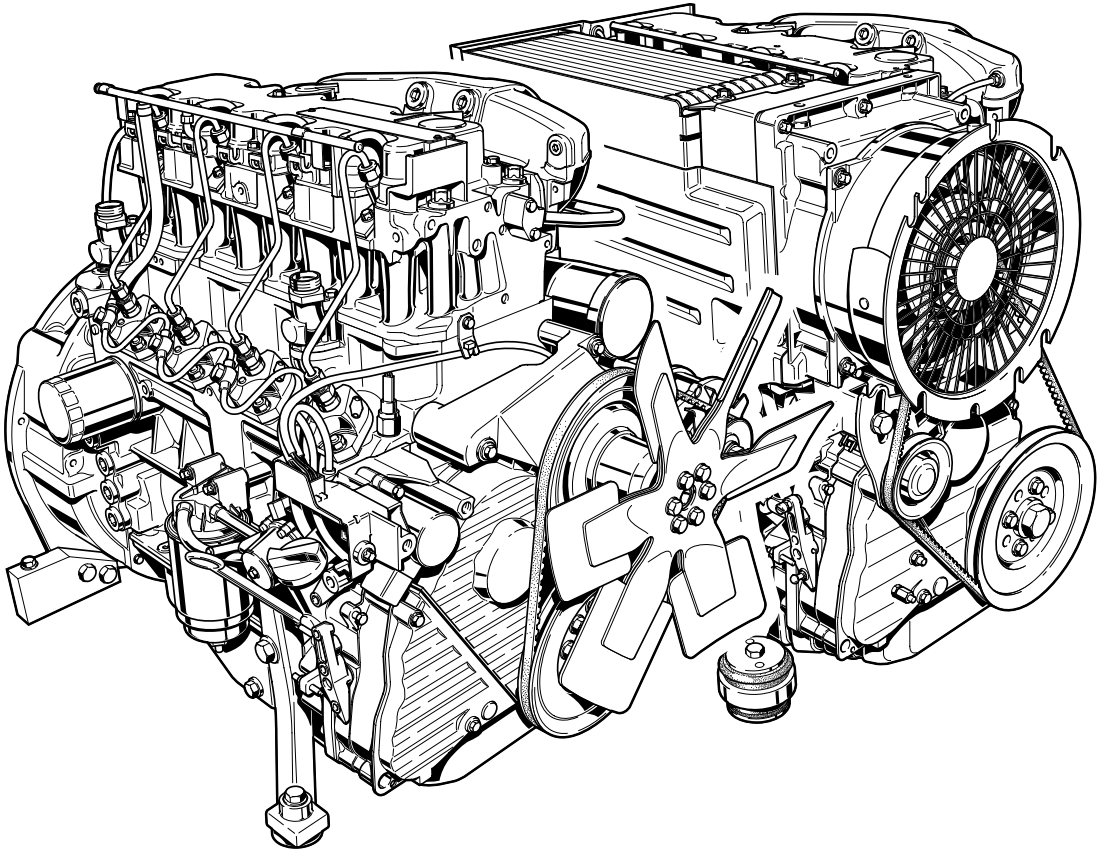

C 2000

DEUTZ Diesel Engines

are the product of many years of research and development. The resulting know-how, coupled with stringent quality standards, guarantee their long service life, high reliability and low fuel consumption.
It goes without saying that DEUTZ Diesel Engines meet the highest standards for environmental protection.

Beware of Running Engine

Shut the engine down before carrying out maintenance or repair work. Ensure that the engine cannot be accidentally started. Risk of accidents.
When the work is complete, be sure to refit any panels and guards that may have been removed.
Never fill the fuel tank while the engine is running.
Observe industrial safety regulations when running the engine in an enclosed space or underground.

Care and Maintenance

Sound care and maintenance practices will ensure that the engine continues to meet the requirements placed on it. Recommended service intervals must be observed and service and maintenance work carried out conscientiously.
Special care should be taken under abnormally demanding operating conditions.

Safety

This symbol is used for all safety warnings. Please follow them carefully. The attention of operating personnel should be drawn to these safety instructions. General safety and accident prevention regulations laid down by law must also be observed.

Asbestos

DEUTZ original parts are asbestos-free.

Service

Please contact one of our authorized service representatives in the event of breakdowns or for spare parts inquiries. Our trained specialists will carry out repairs quickly and professionally, using only genuine spare parts.
Original parts from DEUTZ AG are always produced in accordance with state-of-the-art technology.
Please turn to the end of this manual for further service information.

California
Proposition 65 Warning

Diesel engine exhaust and some of its constituents are known to the State of California to cause cancer, birth defects, and other reproductive harm.

1

Engine Description

2

2.1 Model
2.2 Engine Illustrations
2.3 Lube Oil Circuit Schematic
2.4 Fuel System Schematic

C 2001

2.1.1 Rating Plate

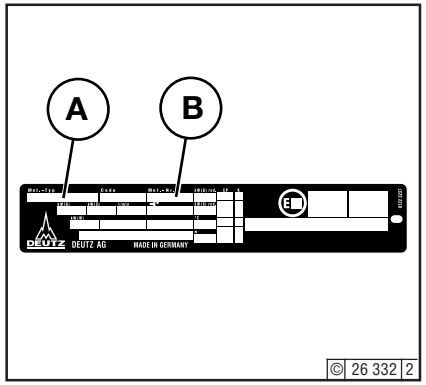

The model **A**, the engine serial number **B** and the performance data are stamped on the rating plate. The model and engine serial number must be given when ordering parts.

2.1.2 Position of the Rating Plate

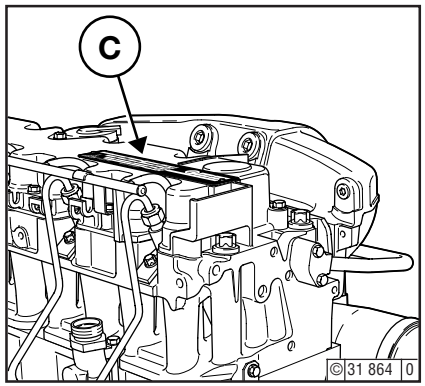

The rating plate **C** is attached to the valve cover.

2.1.3 Engine Serial Number

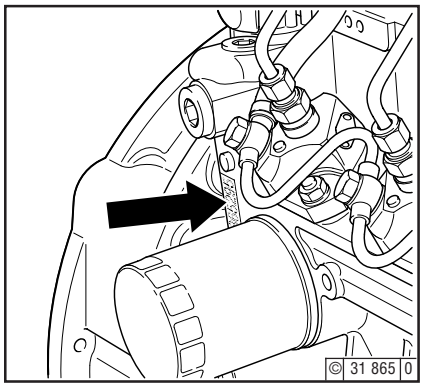

The engine serial number **B** is stamped on the crankcase **D** as well as the rating plate.

2.1.4 Cylinder Numbering

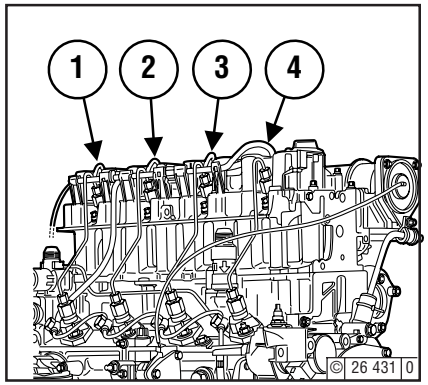

Cylinders are numbered consecutively, beginning at the flywheel.

2.1.5 Fuel Delivery Lock

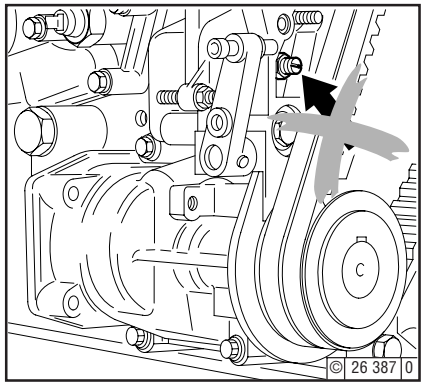

The manufacturer shall not be held liable for damages resulting from adjustments made to the regulator by the operator.
The lock screws are protected in order to prevent this:

1. with locking paint on model:
   with torque balancer
2. with plastic protective cap on model:
   without torque balancer.

Adjustments to the regulator are to be carried out only by authorised DEUTZ SERVICE specialists

2.2.1 Operation Side FL 2011

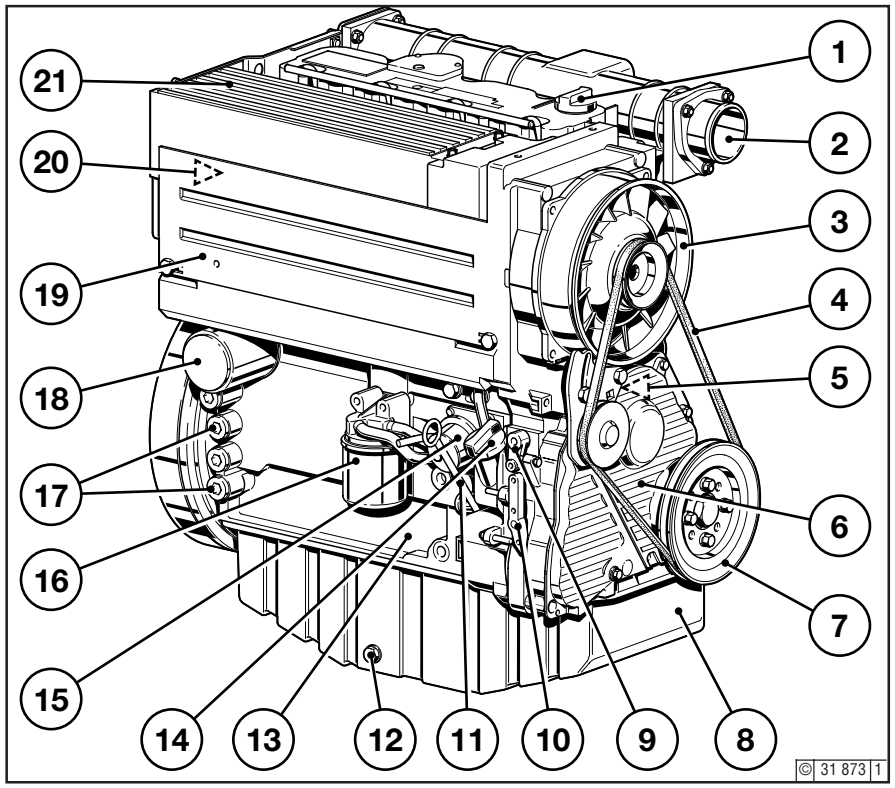

C 2001

1 Oil filler neck (valve-gear housing cover)
2 Charge-air line / air-intake line
3 Fan with integrated generator
4 Narrow V-belt
5 Tractive electromagnet
6 Wheel-house cover
7 V-belt pulley on crankshaft
8 Oil pan
9 Shut-off lever
10 Speed control lever
11 Oil dipstick
12 Oil drain plug
13 Crankcase
14 Oil fill point (on side of crankcase)
15 Fuel pump
16 Easy-change fuel filter
17 Connecting facility for oil heater
18 Lube oil replacement filter
19 Removable coolant intake hood
20 Injection pumps
21 Oil cooler

2.2.2 Exhaust Side
FL 2011

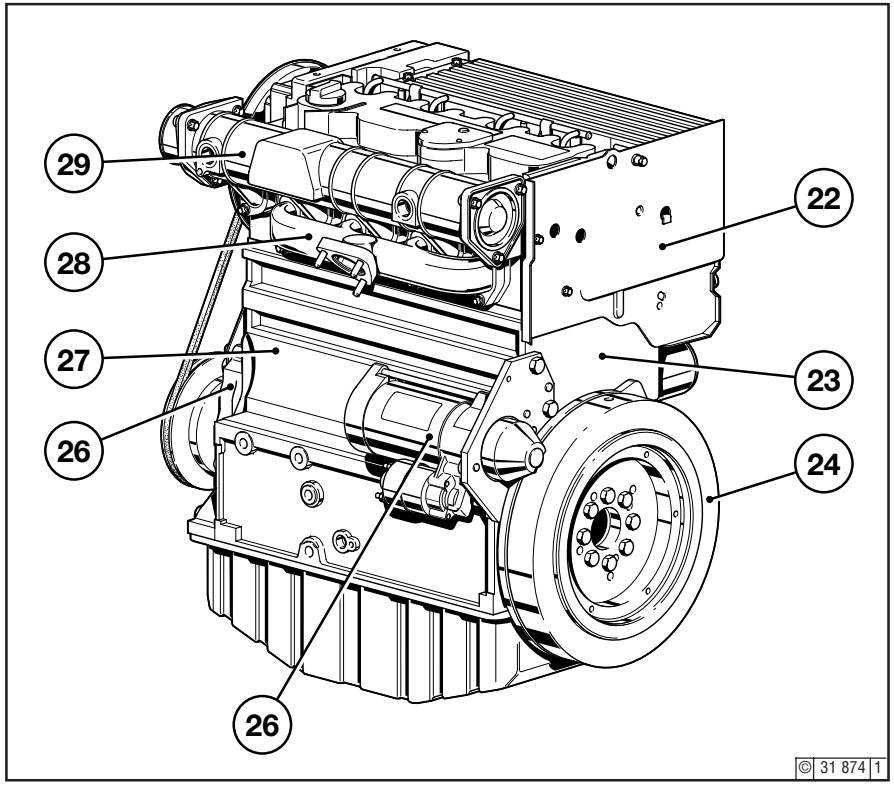

22 Date plate
23 Optional attachment of an SAE housing
24 Flywheel with ring gear
25 Starter
26 Front cover
27 Crankcase
28 Exhaust manifold
29 Air intake pipe

C 2001

2.2.3 Operation Side
Example: BF4L 2011

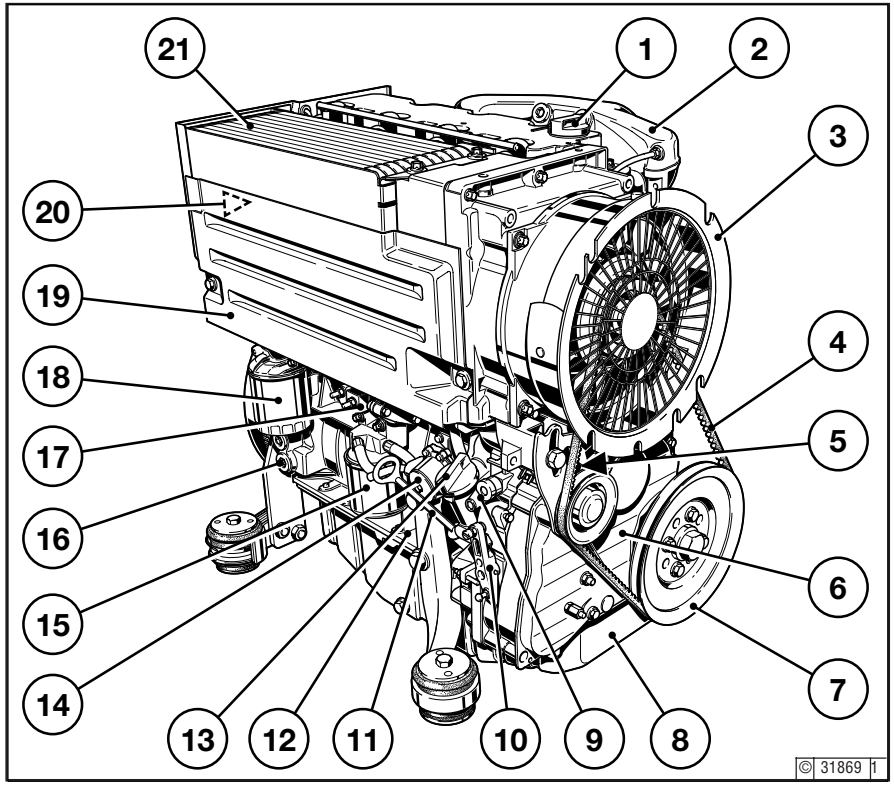

C 2001

1 Oil filler neck (valve-gear housing cover)
2 Charge-air line / air-intake line
3 Fan with integrated generator
4 Narrow V-belt
5 Tractive electromagnet
6 Wheel-house cover
7 V-belt pulley on crankshaft
8 Oil pan
9 Shut-off lever
10 Speed control lever
11 Oil dipstick
12 Crankcase
13 Oil fill point (on side of crankcase)
14 Fuel pump
15 Easy-change fuel filter
16 Connecting facility for oil heater
17 Charge-pressure-dependent full-load stop (CPD)
18 Lube oil replacement filter
19 Removable coolant intake hood
20 Injection pumps
21 Oil cooler

2.2.4 Exhaust Side
Example: BF4L 2011

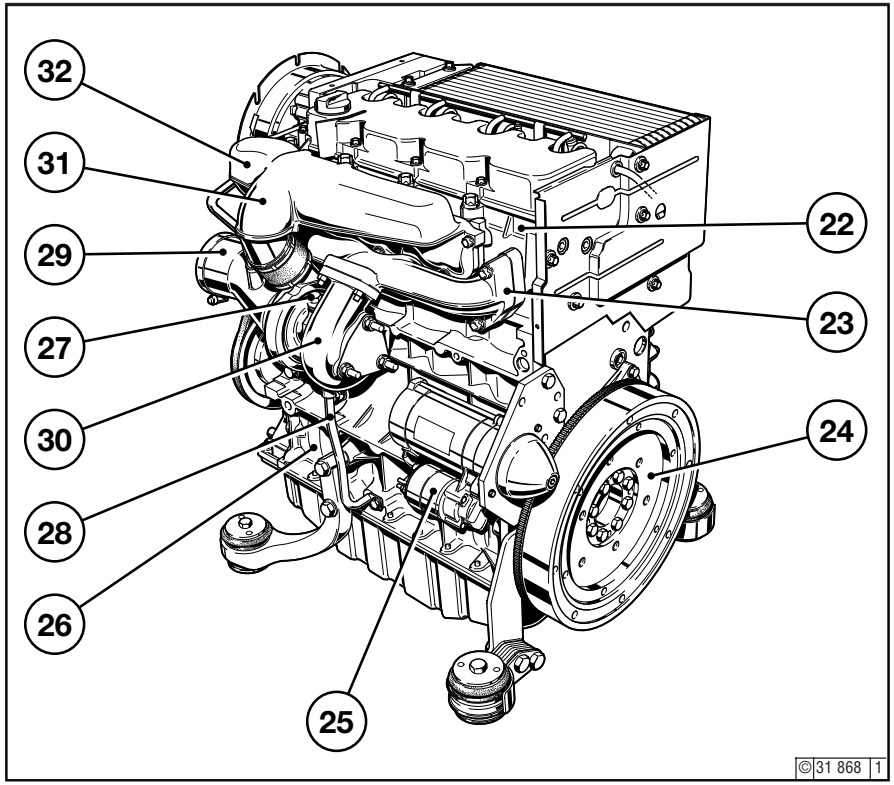

22 Cylinder head
23 Exhaust manifold line
24 Flywheel with ring gear
25 Starter
26 Crankcase
27 Lube oil feed line to turbocharger
28 Lube oil return line from turbocharger
29 Induction pipe
30 Turbocharger (TC)
31 Intake manifold
32 Charge-air line

C 2001

2.2.5 Operation Side FM 2011

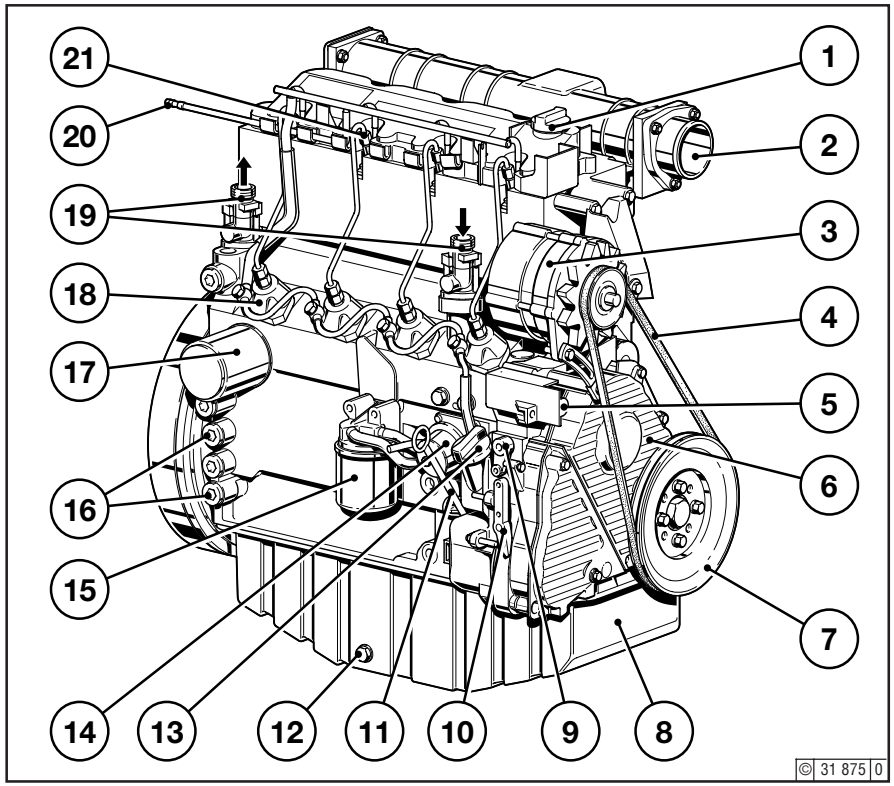

C 2001

1 Oil filler neck (valve-gear housing cover)
2 Charge-air line / air-intake line
3 Alternator
4 Narrow V-belt
5 Tractive electromagnet
6 Timing belt cover
7 V-belt pulley on crankshaft
8 Oil pan
9 Shut-off lever
10 Speed control lever
11 Oil dipstick
12 Oil drain plug
13 Oil fill point (on side of crankcase)
12 Crankcase
14 Fuel pump
15 Easy-change fuel filter
16 Connecting facility for oil heater
17 Lube oil replacement filter
18 Injection pump(s)
19 Oil cooler connection
20 Fuel leakage line
21 Injection valve(s)

2.2.6 Exhaust Side FM 2011

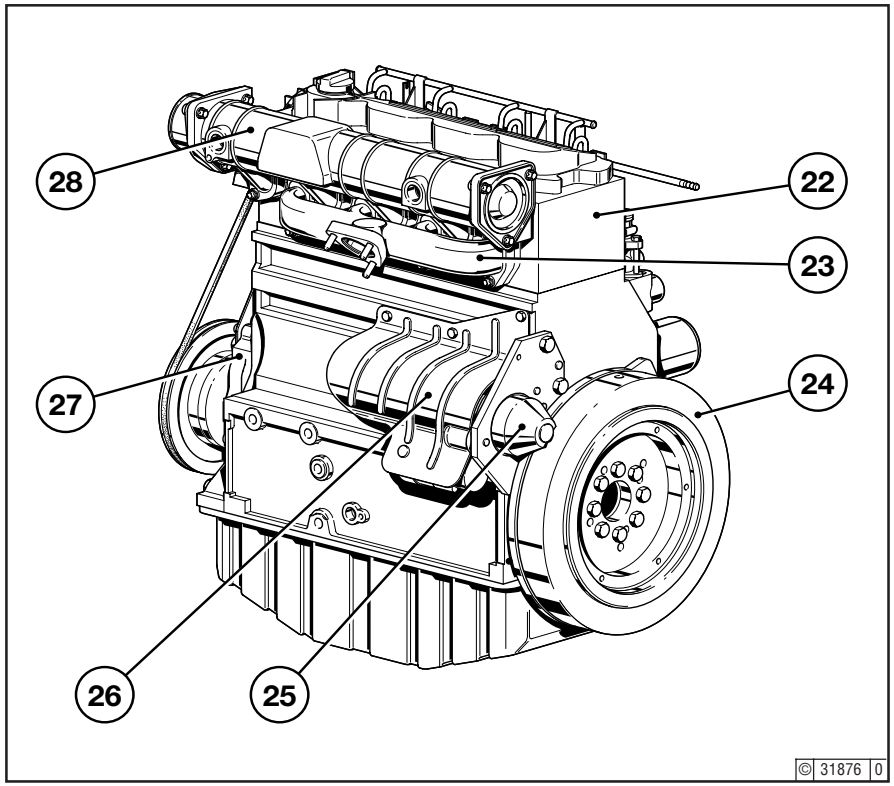

22 Cylinder head
23 Exhaust manifold
24 Flywheel with ring gear
25 Starter
26 Starter guard (optional)
27 Crankcase
28 Air intake pipe

C 2001

2.2.7 Operation Side BFM 2011

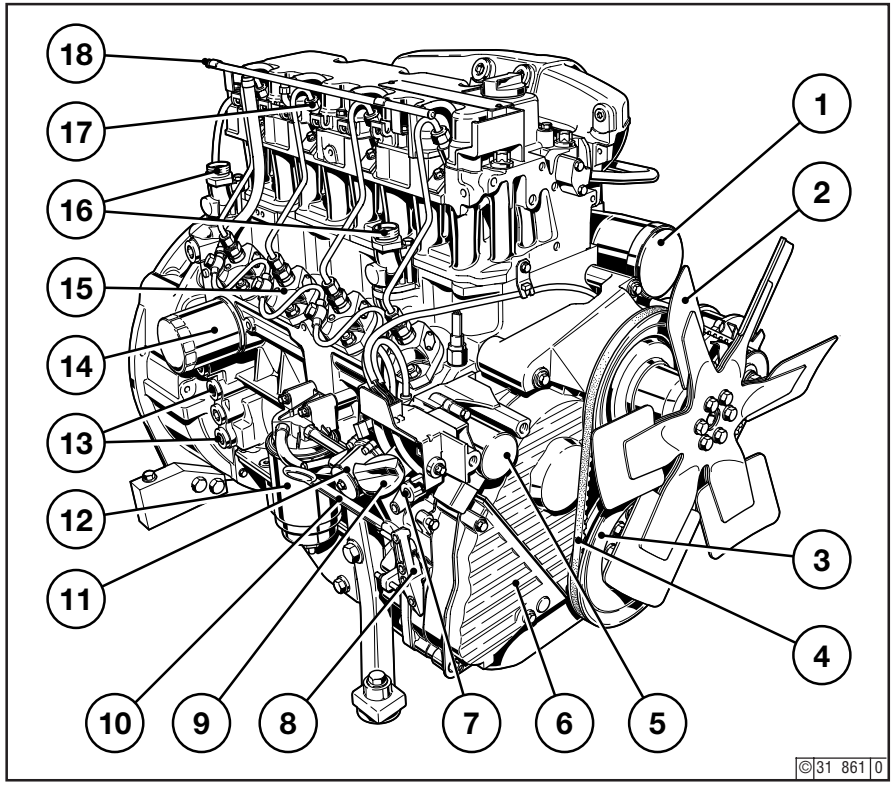

C 2001

1 Air-intake pipe
2 Fan wheel
3 V-belt pulley on crankshaft
4 Narrow V-belt
5 Tractive electromagnet
6 Timing belt cover
7 Shut-off lever
8 Speed control lever
9 Oil fill point (on side of crankcase)
10 Oil dipstick
11 Fuel pump
12 Easy-change fuel filter
13 Connecting facility for oil heater
14 Lube oil replacement filter
15 Injection pump(s)
16 Oil cooler connection
17 Injection valve(s)
18 Fuel leakage line

2.2.8 Exhaust Side BFM 2011

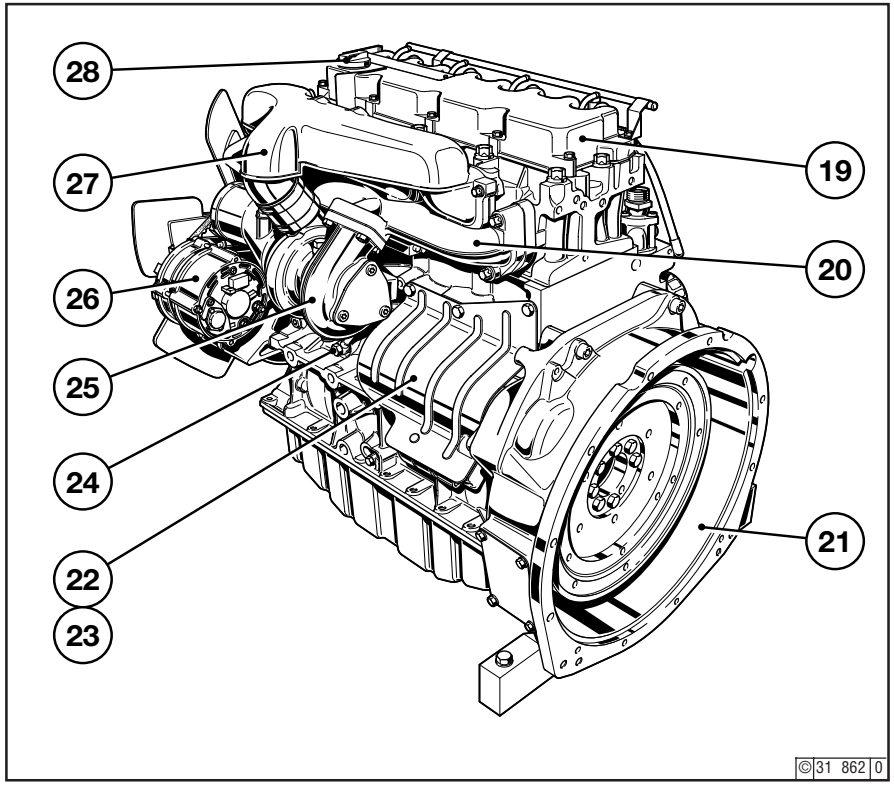

19 Crankcase ventilation (optional)
20 Cylinder head cover
21 Exhaust manifold
22 SAE housing
23 Starter
24 Crankcase
25 Turbocharger
26 Generator with cover
27 Charge-air line
28 Oil filler neck

C 2001

2.3.1 Lube Oil Circuit Schematic

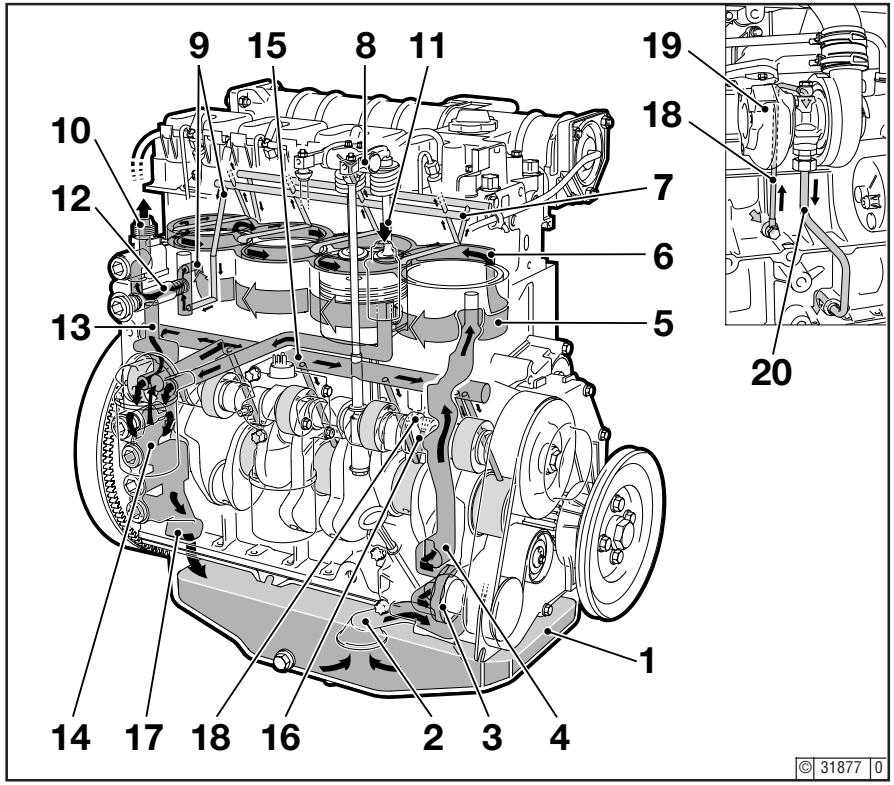

C 2001

1 Oil pan
2 Oil-intake pipe
3 Oil pump
4 Main oil duct
5 Oil-cooled cylinders
6 Cylinder head cooling neck
7 Oil duct for rocker arm lubrication
8 Rocker arm
9 Oil manifold for the thermostat
10 Intake to external engine oil cooler
11 Return from external engine oil cooler
12 Thermostat housing with slide thermostat
13 Oil duct to oil filter
14 Oil filter
15 Oil duct to cam, con-rod and crankshaft bear ings
16 Spray nozzle for piston cooling
17 Oil return via crankcase to oil pan
18 Lube oil intake to turbocharger
19 Turbocharger
20 Return from turbocharger to oil pan

2.4.1 Fuel System

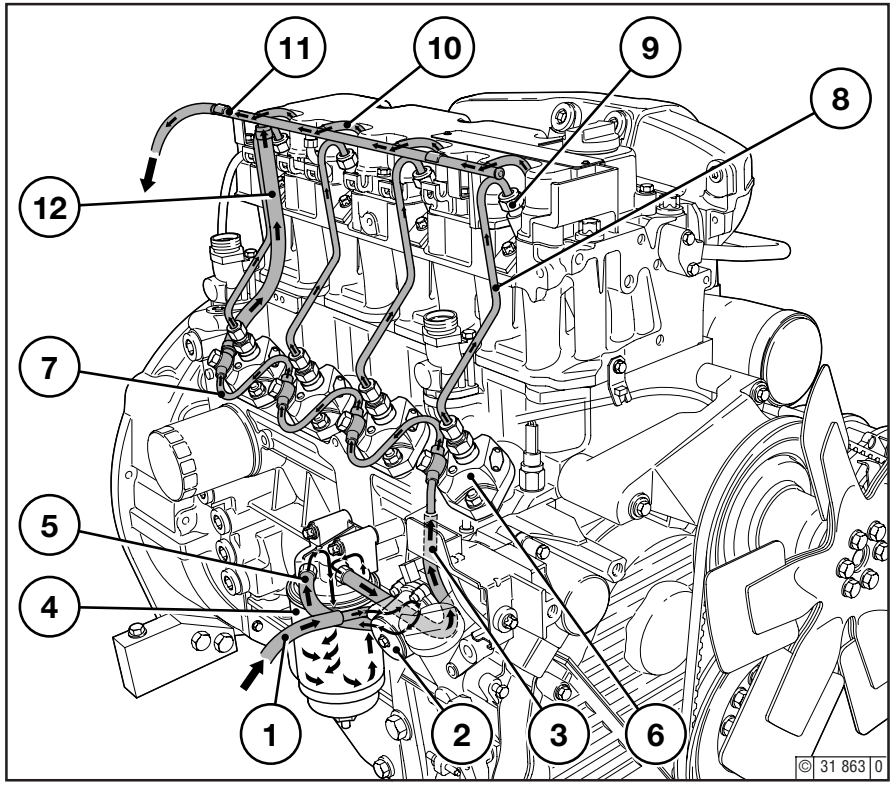

1 Fuel line from tank to fuel pump
2 Fuel pump
3 Fuel line from fuel pump to easy-change fuel filter
4 Easy-change fuel filter
5 Fuel line from filter to injection pump
6 Injection pump
7 Fuel distributor line
8 Injection line
9 Injection valves
10 Fuel leakage line
11 Fuel overflow pipe
12 Fuel return line to tank

The installation of a fuel pre-filter/ hand pump between the fuel tank and the engine is prescribed to protect the engines against dirt in the fuel.

C 2001

C 2001

Engine Operation

3

3.1 Commissioning
3.2 Starting
3.3 Monitoring Operation
3.4 Shutting Off
3.5 Operating Conditions

3.1.1 Adding Engine Oil

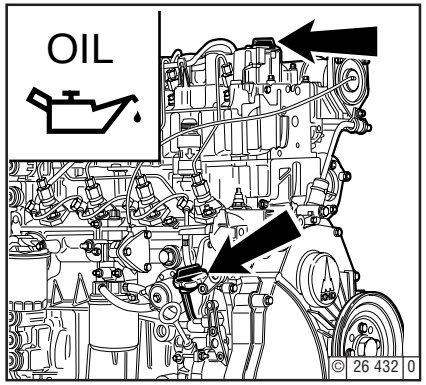

As a rule, engines are delivered without oil.
Pour lube oil into the oil filler neck (arrow).
For oil grade and viscosity, see 4.1.

3.1.1.1 Initial Engine Oil Fill-Up for B/FL 2011

- Fill oil into oil pan up to **"Max."** mark on engine dipstick (for oil quantity see 9.1).
- Start engine and allow to run at low idling speed for approx. 2 mins.
- Switch off engine.
- Check oil level, if necessary, top up oil to **"Max."** mark.

3.1.1.2 Initial Engine Oil Fill-Up B/FM 2011

- Fill oil into oil pan up to **"Min."** mark on engine dipstick.
- In addition, top up oil quantity of supply hoses and of external oil cooler (according to manufacturer's specifications).
- Allow engine to run warm until thermostat opens (at approx. 95°C).
- Allow engine to run for approx. 2 mins.
- Switch off engine.
- Check oil level, and if necessary, top up oil to **"Max."** mark.

If the person operating the engine does not run up the engine until the thermostat opens, the oil level may lie above the **"Max."** mark on the engine dipstick when delivered. The level can then only be assessed after the engine has been run up.

3.1.1.3 Initial Engine Oil Fill-Up B/FM 2011 Genset Engine

- Fill oil into oil pan up to **"Max."** mark on engine dipstick (for oil quantity see 9.1).
- Start engine and allow to run at low idling speed for approx. 2 mins.
- Switch off engine.
- Check oil level and fill up with oil up to upper **"Max."** mark.

3.1.2 Adding Fuel

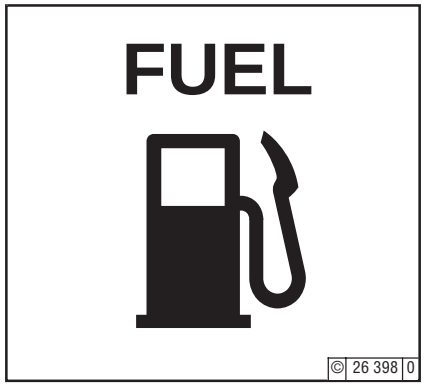

Use only commercial-grade diesel fuel. For fuel grade, see 4.2. Use summer or winter-grade fuel, depending on the ambient temperature.

Never fill the tank while the engine is running.
Ensure cleanliness!
Do not spill fuel!

3.1.3 Other Preparations

- Check battery and cable connectors, see 6.7.1.
- Transport hooks
  Remove if fitted (see 6.7.3)
- Trial run
  After engine has been prepared, let it run for about 10 minutes without being loaded.

  During and after trial run
  - Check engine for leaks.
  After engine has been turned off
  - Check oil level,
    see 6.1.2.
    Top up with oil, if necessary,
    see 3.1.1.
  - Retension V-belt,
    see 6.5).

3.1.4 Additional Maintenance Work

When commissioning new and reconditioned engines, the following additional maintenance work must be carried out:

- Change lube oil, see 6.1.1. + 6.1.2.
- Change oil filter cartridge, see 6.1.3.
- Change fuel filter cartridge, see 6.2.1.
- Check V-belts and retension as necessary, see 6.5.
- Check engine for leaks
- Check engine mounts, retighten if necessary, see 9.2.
- Check valve clearance, adjust if necessary, see 5.1. + 6.6.1.

3.2.1 Electric starting

Before starting, make sure that nobody is standing in the immediate vicinity of the engine or driven machine.
After repair work:
Check that all guards have been replaced and that all tools have been removed from the engine.
When starting with glow plugs, do not use any other starter substance (e.g. injection with start pilot). Risk of accident!
Caution: If the speed regulator has been removed, the engine must not be tested under any circumstances.

Disconnect the battery!

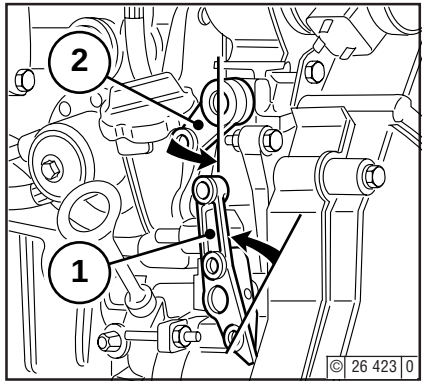

- Where possible, disengage clutch to separate engine from any driven parts.
- Move speed control lever 1 into idle position.
- Move shut-off handle 2 into operating position.

Without cold start assistance

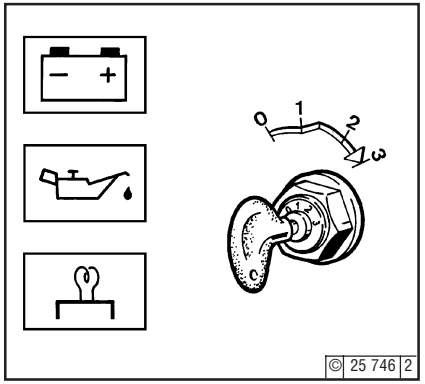

- Insert key
  - Position 0 = no operating voltage
- Turn key clockwise
  - Position 1 = operating voltage
  - Pilot lights come on
- Push key in and turn further clockwise against spring pressure.
  - Position 2 = no function
  - Position 3 = start
- Release key as soon as engine fires
  - Pilot lights go out.

Do not actuate the starter for more than 20 seconds. If the engine does not catch, wait a minute then try again.
If the engine does not catch after two attempts, refer to the Fault Table (see 7.1).

With cold start assistance
- Glow plug

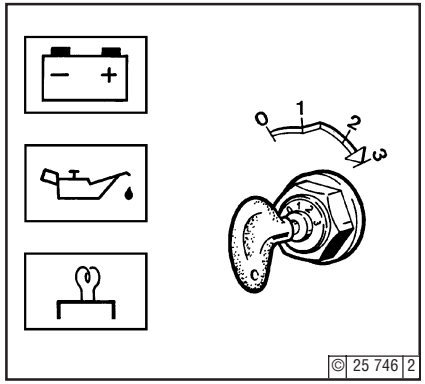

- Insert key
  - Position 0 = no operating voltage
- Turn key clockwise
  - Position 1 = operating voltage
  - Pilot lights come on
- Push key in and turn further clockwise against spring pressure.
  - Position 2 = preheat, hold for approx. 1 minute.
  - Preheat lamp comes on
  - Position 3 = start
- Release key as soon as engine fires
  - Pilot lights go out

3.3.1 Engine Oil Pressure

Oil Pressure Pilot Light

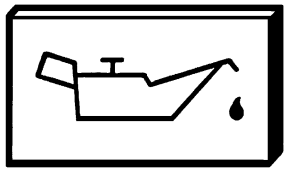

© 25 752 1

- Oil pressure pilot light comes on with operating voltage on and engine off.
- Oil pressure pilot light should go out when engine is running.

Oil Pressure Indicator

© 25 753 0

- Pointer must remain in green sector over entire operating range.

Oil Pressure Gauge

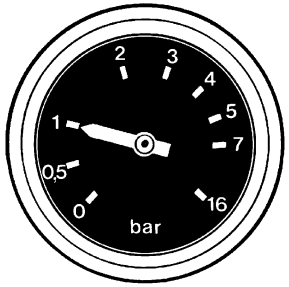

© 25 754 0

- Pointer must indicate minimum oil pressure (see 9.1).

3.3.2 Engine Temperature
Engine Temperature Gauge

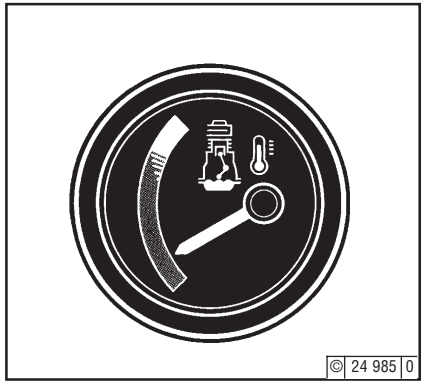

- Engine temperature gauge pointer should remain in green sector most of time. It should rarely enter yellow-green sector. If pointer enters orange sector, engine is overheating. Turn off and establish cause from Fault Table (see 7.1).

3.4.1 Mechanical Shut-Off

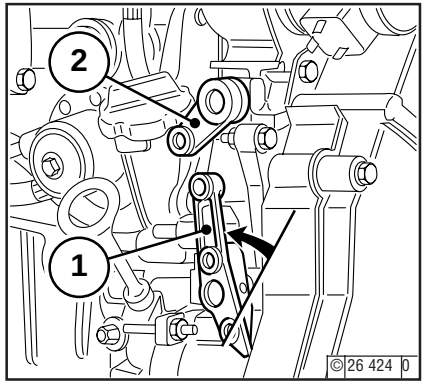

- Move speed adjustment lever 1 to low idle.
- Move shut-off lever 2 until engine comes to a stop.
  Charge pilot light and oil pressure pilot light will come on when engine stops.
- Turn key anticlockwise (to position 0) and remove. Pilot lights will go out.

3.4.2 Electric Shut-Off (Ignition Key)

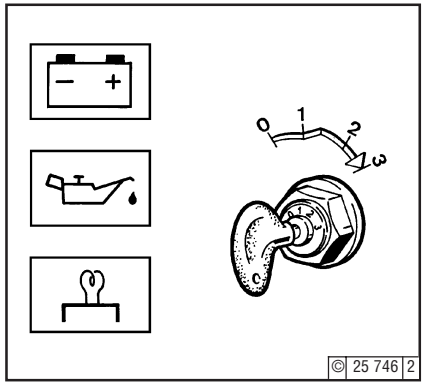

- Turn key anticlockwise (to position 0) and remove. Pilot lights will go out.

If possible, do not suddenly switch off engine when under full load.

3.5.1 Winter Operation

- Lube Oil Viscosity
  - Select oil viscosity (SAE grade) according to ambient temperature before starting engine, see 4.1.2.
  - Increase oil change frequency when operating below -10°C, see 6.1.1.

- Diesel Fuel
  - Use winter-grade diesel fuel for operation be low 0°C, see 4.2.2.

- Additional Maintenance Work
  - Drain sludge from fuel tank once a week (undo sludge drain screw).
  - If necessary, allow oil in oil bath air cleaner and engine oil to settle at ambient temperature.
  - Below -20°C, after removing starter if neces sary, smear ring gear on flywheel via pinion bore from time to time with cold-resistant grease.
    (e.g. Bosch grease FT 1 V 31).

- Cold Start Assistance
  - At temperatures near or below freezing point, use glow plugs if necessary, see 3.2.1.
    This not only lowers starting limit temperature, but provides easier starting at temperatures normally not requiring a starting aid.

- Battery
  - Efficient cold starting requires that battery is well-charged, see 6.7.1.
  - Starting limit temperatures can be lowered by 4-5°C by heating battery up to about +20°C. (To do so, remove battery and store in warm place).

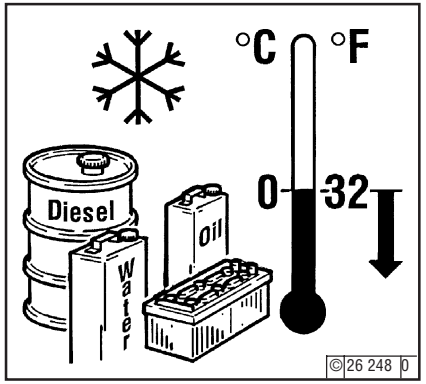

3.5.2 High Ambient Temperature, High Altitude

- Air density decreases as altitude or ambient temperature increases. As a result of this, the engine's maximum output, quality of exhaust gas, temperature level and, in extreme cases, starting behaviour, are impaired. Engine can be used at altitudes up to 1000 m and temperatures up to 30°C for mobile operations. If the engine is to operate under more severe conditions (at higher altitudes or temperatures), it will be necessary to reduce the injected fuel quantity and thus engine power.

- If you have any doubts about engine operation under these or similar conditions, ask your engine or equipment supplier whether the engine has been derated in the interests of reliability, service life and exhaust gas quality (smoke). Otherwise contact DEUTZ SERVICE.

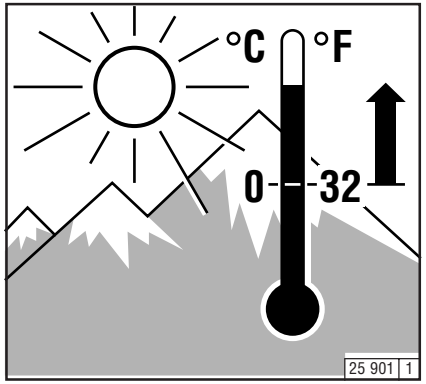

4.1 Lube Oil
4.2 Fuel

C 2000

4

4.1.1 Quality

Lube oils are differentiated according to their performance and quality class. In common use are specifications named after the **API** (American Petroleum Institute) and **ACEA** European Engine Oil Sequences.

Approved API Oils:
Minimum: CF-4

Approved ACEA Oils:
Minimum: E1-96

*Oil change intervals, see 6.1.1
Oil capacities, see 9.1

4.1.2 Viscosity

As the viscosity of the lube oil is dependent on temperature, the choice of SAE grade should be governed by the ambient temperature prevailing at the engine operating site. Optimum operating behaviour will be attained if you take the accompanying oil viscosity diagram as a guide.
Should the temperature fall temporarily below the limits of SAE grade selected, cold starting may be affected but the engine will not be damaged. In order to keep wear to a minimum, do not exceed application limits for extended periods of time.
Oil changes dictated by the seasons can be avoided by using multi-grade lube oils. Multi-grade oils, particularly light-flowing oils, also reduce fuel consumption.

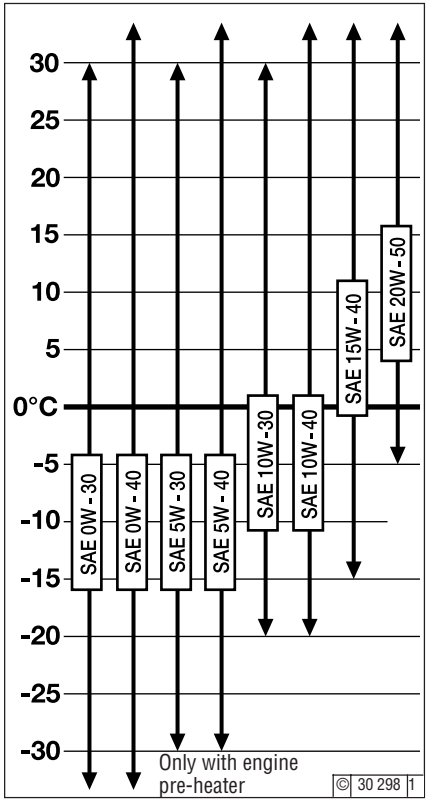

C 2001

4.2 Fuel

4.2.1 Quality

Use commercially available diesel fuel with less than 0.5% sulphur content. If the sulphur content is higher, oil change intervals should be reduced (see 6.1.1).

The following fuel specifications / standards are approved:

- DIN EN 590
- BS 2869
- ASTM D 975-96; 1-D and 2-D
- NATO Code F-54 / F-34 / F-44 and XF 63

Exhaust emission values which may be determined in the case of type approval tests always refer to the reference fuel prescribed by the authorities for the type approval test.

4.2.2 Winter-Grade Fuel

Waxing may occur at low temperatures, clogging the fuel system and reducing engine efficiency. If the ambient temperature is less than 0°C, winter-grade fuel (suitable down to -15°C) should be used. (This fuel is usually available from filling stations well in advance of the cold months). Diesel fuel containing additives (Super diesel) is often on sale as well, for use down to -20°C.

- At temperatures below -15°C to -20°C, kerosene should be added to the diesel fuel. The relevant percentages are given in the adjacent diagram.

If summer-grade diesel fuel must be used at temperatures below 0°C, up to 60% kerosene can be added (see diagram).

In most cases, adequate resistance to cold can also be obtained by adding a flow improver (additive). Please inquire at DEUTZ SERVICE.

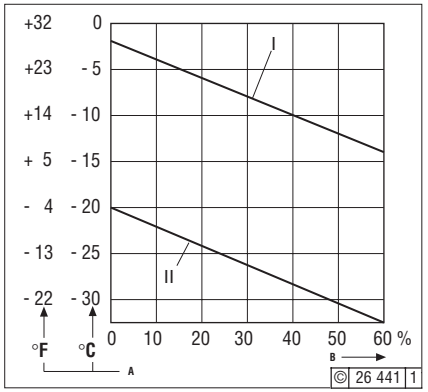

Legend:	
I	Summer-grade diesel fuel
II	Winter-grade diesel fuel
A	Ambient temperature
B	Percentage of kerosene added

Diesel fuels must never be mixed with petrol (Normal and Super grades)!

Mix in tank only! Fill with the appropriate amount of kerosene first, then add the diesel fuel.

C 2000

C 2001

5.1 Service Plan
5.2 Scheduled Maintenance Plan
5.3 Maintenance Chart
5.4 Maintenance Work Completed

Deutz maintenance and service schedule = E check = ● adjust = ❍ clean = ▲ replace = ■

prior to or during 1st trial run, check 2x daily during the breaking-in phase or when commissioning new and overhauled engines

Industrial engines

The specified engine maintenance intervals are permissible recommended maximums. Depending on usage, reduced maintenance intervals may be necessary (comply with the unit manufacturer's operating instructions).
#Maintenance must only be carried out by authorise service personnel

	every 10 operating hours or daily	in operating hours (OH) every						Years			
E10	E20	E25	E30	E40	E50	E60	E70			Operation	Section
		500	1000	3000	5000	6000	12000	1	2		
●	●									Top lube oil up if necessary	6.1.2/3.1.4
			■							FL 2011 lube oil, see TC 0199-99-3002	6.1.1/ 6.1.2
		■								BFL 2011 lube oil, see TC 0199-99-3002	6.1.1/6.1.2
	●		▲				■			Oil bath (lube oil quality, see TC 0199-99-3002 / Dry type filter	6.4
			■							Oil filter cartridge FL 2011	6.1.3
		■								Oil filter cartridge BFL 2011	6.1.3
			■							Fuel filter cartridge	
			▲							Change fuel pump/strainer if necessary	6.2.2
			●						■	Flexible fuel leakage lines, see TC 0138-21-9300	6.2.1/6.2.3
				●			■			Injection valve	#
●			▲							Fuel pre-cleaner	4.2
			●						■	Intake air cleaner (if available, maintain according to maintenance indicator)	6.4.3/6.4.4
		●								Battery and cable connectors	6.7.1
●									●	Engine monitoring system, warning system (replace if necessary)	3.3 #
❍			❍							Valve clearance	6.6.1#
			❍						■	V-belt	6.5.#
				●						Crankcase pressure vent valve	#
				■						Timing belt, extreme-duty, see adjacent table	#
					■					Timing belt, heavy-duty, see adjacent table	#
						■				Timing belt, light-duty, see adjacent table	#
●										Check engine for leaks (visual inspection)	–
			●				■			Engine mount (replace if damaged)	9.2
							■			Basic overhaul	#

Timing belt change intervals Guideline values in OH	Engine application Example:	Engine/ application/operating parameters Example:
6000 or max. 5 years	Generating sets 1500/1800 rpm; pump units, low speed; platform lifts; refrigeration units etc.	low speed; moderate ambient temperature; low dust exposure
5000 or max. 5 years	compressors; rollers; forklift trucks; welding units; small dumpers; ski-steer loaders etc.	wheel loaders; medium to high variable speed; high ambient temperature moderate dust exposure
3000 or max. 5 years	agricultural machinery; ski-steer loaders; wheel loaders; drilling	high speed; impact loads; extreme ambient temperature;

equipment; trench-cutting machines; joint cutters; bulldozers etc. high dust exposure

5.2 Scheduled Maintenance Plan

5.2.1 Scheduled Maintenance Plan

Intervals at/after	Deutz maintenance and service schedule	Operation	Carried out by:
50 OH	E10	After commissioning and E50-E70	Authorised specialists
Daily	E20	Daily check	Operator
250 OH	E25	Inspection	Authorised specialists
500 OH	E30	Extended inspection	Authorised specialists
1000 OH	E40	Interim overhaul	Authorised specialists
3000 OH	E50	Extended interim overhaul	Authorised specialists
6000 OH	E60	Partial overhaul	Authorised specialists
12000 OH	E70	Basic overhaul	Authorised specialists

The maintenance chart shown here is supplied as a self-adhesive label with each engine. It should be affixed where it can be seen clearly on the engine or driven equipment.

Check that this is the case.

If necessary, ask your engine or equipment supplier for a fresh supply of labels.

Routine work should be carried out according to the schedule in 5.1.

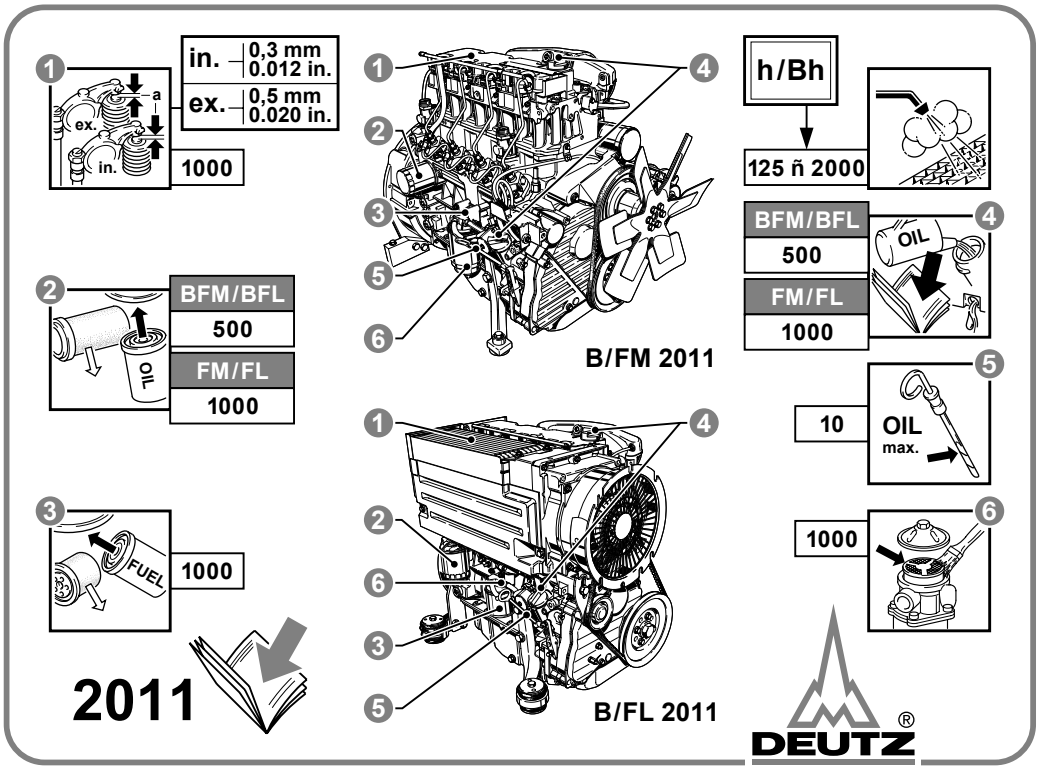

0297 9935 0

Stop the engine before carrying out any maintenance work.

Op. hours	Date	Signature/stamp	Op. hours	Date	Signature/stamp
50-150*			-		
125			250		
375			500		
625			750		
875			1000		
1125			1250		
1375			1500		
1625			1750		
1875			2000		
2115			2250		
2375			2500		
2625			2750		

* Following commissioning of new and overhauled engines
Duly completed maintenance jobs can be recorded and signed off in the above chart.

Op. hours	Date	Signature/stamp	Op. hours	Date	Signature/stamp
2875			3000		
3125			3250		
3375			3500		
3625			3750		
3875			4000		
4125			4250		
4375			4500		
4625			4750		
4875			5000		
5125			5250		
5375			5500		
5625			5750		

Duly completed maintenance jobs can be recorded and signed off in the above chart.

Op. hours	Date	Signature/stamp	Op. hours	Date	Signature/stamp
5875			6000		
6125			6250		
6375			6500		
6625			6750		
6875			7000		
7125			7250		
7375			7500		
7625			7750		
7825			8000		
8125			8250		
8375			8500		
8625			8750		
Duly completed maintenance jobs can be recorded and signed off in the above chart.					

Op. hours	Date	Signature/stamp	Op. hours	Date	Signature/stamp

6.1 Lubrication System
6.2 Fuel System
6.3 Cooling system
6.4 Combustion Air Filter
6.5 Belt Drives
6.6 Adjustments
6.7 Accessories
6.8 Engine Cleaning

C 2001

6.1.1 Oil Change Intervals

- Oil change intervals are dependent on engine application and quality of lube oil.
- If engine runs fewer hours during year than stated in table, oil should be changed at least **once a year**.
- Table refers to following conditions:
  - sulphur content max. 0.5% by weight for diesel fuel
  - continuous ambient temperature to -10°C (+14°F).
- If sulphur content is > 0.5 to 1% or continuous ambient temperature below -10°C (+14°F), intervals between oil changes should be halved.
- In case of fuels containing more than 1% sulphur, contact **your service representative**.

Engines for installation			Lube oil change intervals in OH		
			Naturally aspirated engines	Turbocharged engines	
Lube quality	API-specification		CF-4/ CG-4 / CH-4	CF-4	CG-4 / CH-4
	ACEA-specification		E1-E3/96+ E4-98	E1-E2/96	E3-96+ E4-98
Normal duty oil, e.g.: road vehicles, cranes, construction machinery, ships, generating sets, pumps, rail vehicles.			1000	250	500
Heavy duty for oil, e.g.: combine harvesters, emergency pumps, underground mining units, sweeping machines, winter maintenance equipment, emergency generators.			500	125	250
Vehicle engines			**Lube oil change intervals in km**		
			Naturally aspirated engines	Turbocharged engines	
Lube oil quality	API specification		CF-4/ CG-4 / CH-4	CF-4	CG-4 / CH-4
	ACEA specification		E1-E3/96+ E4-98	E1-E2/96	E3-96+ E4-98
Service group	Annual usage km	Average driving speed approx. km/h			
I	< 30 000	20	20 000	5 000	10 000
II	30 000 – 100 000	40	40 000	10 000	20 000
III	> 100 000	60	60 000	15 000	30 000

Change oil with engine off but still warm (lube oil temperature approx. 80°C).

C 2001

6.1.2 Check Oil Level / Change Engine Oil

6.1.2.1 Check Oil Level

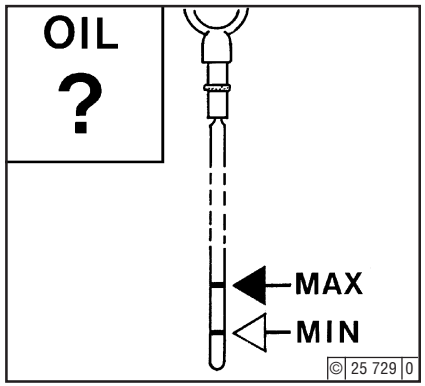

- Switch engine off before checking oil level.
- Ensure that engine or vehicle is level.
- Remove oil dipstick.
- Wipe dipstick with non-fibrous, clean cloth.
- Insert it to stop and remove again.
- Check oil level, and if necessary, top up to **"MAX"** mark.
  - If oil level is only just above **"MIN"** mark, more oil must be added.

The level must not fall below the **"MIN"** mark.

6.1.2.2 Change Engine Oil

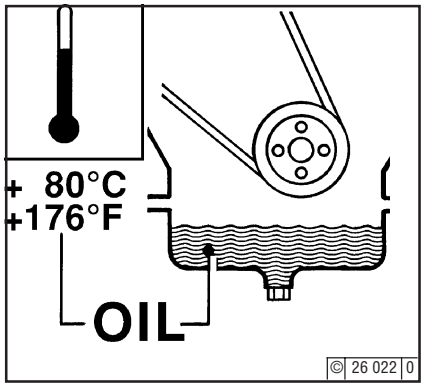

- Allow engine to warm up.
- Ensure that engine or vehicle is level.
  - Lube oil temperature approx. 80°C.
- Switch off engine.

Caution when draining hot oil: Risk of scalding!
Do not let used oil run into the soil but collect it in a container!
Dispose of this in accordance with environmental regulations!

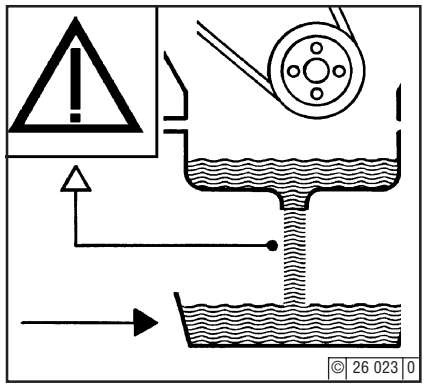

- Place oil tray under engine.
- Unscrew oil drain plug.
- Drain oil.
- Fit oil drain plug with new seal ring and tighten firmly (for torque, see 9.2)
- Pour in lube oil
  - For grade / viscosity, see 4.1
  - For quantity, see 9.1
- Check oil level, see 6.1.2.1.

C 2001

6.1.3 Changing Oil Filter

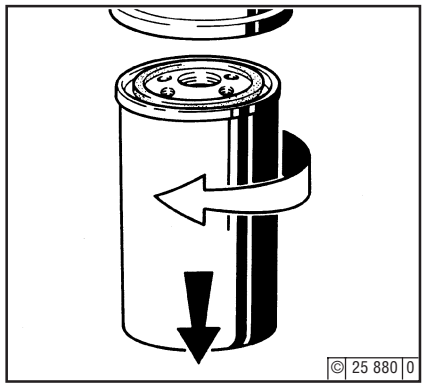

- Undo lube oil filter cartridge using commercial tool and spin off.
- Catch any escaping oil.

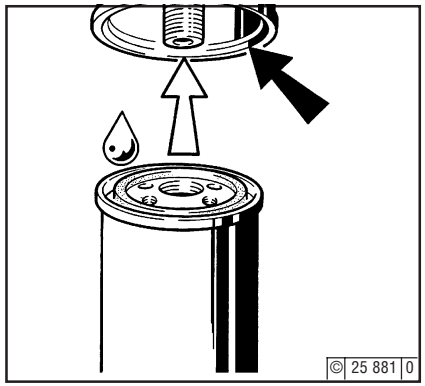

- Clean any dirt from filter carrier sealing surface.
- Lightly oil rubber gasket of new lube oil filter cartridge.
- Manually screw in new cartridge until gasket is flush.

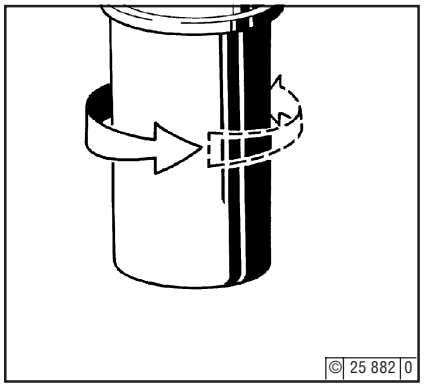

- Tighten lube oil filter cartridge with another half-turn.
- Check oil level, see 6.1.2.
- Check oil pressure, see 3.3.1.
- Check lube oil filter cartridge seal for leaks.

Caution is required in case of hot oil: Risk of scalding!

C 2001

6.1.4 Clean / Replace Oil Filter (Cup)

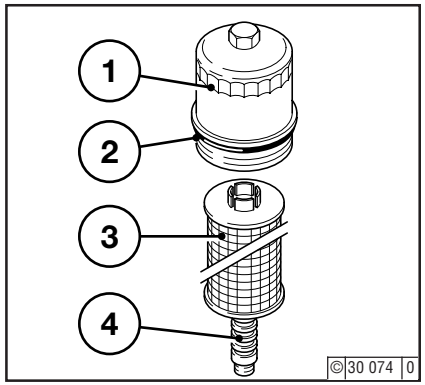

- Switch off engine.
- Loosen lube oil filter cover 1 and unscrew in anticlockwise direction.
- Carefully loosen paper filter cartridge 3 upwards from guide 4.
- Catch any escaping oil.
- Replace paper filter cartridge 3.
- Clean any dirt from sealing surface of filter carrier and lube oil filter cover 1 and from guide 4.
- Replace and lightly oil rubber gasket 2.
- Carefully insert new paper filter cartridge 3 into guide 4.
- Tighten lube oil filter cover 1 in clockwise direction (25 Nm).
- Start engine.
- Check oil level, see 6.1.2.
- Check oil pressure, see 3.3.1.
- Check lube oil filter attachment for leaks.

Caution is required in case of hot oil:
Risk of scalding!

C 2001

6.2.1 Replace Fuel Filter

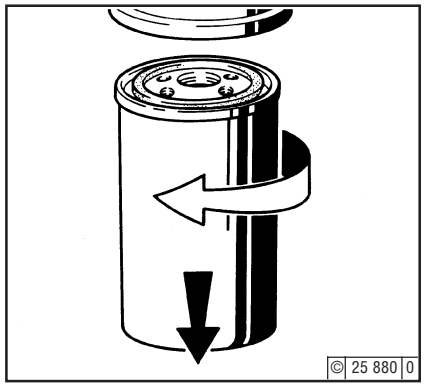

- Close fuel shut-off valve.
- Undo fuel filter cartridge with commercial tool and spin off.
- Catch any escaping fuel.

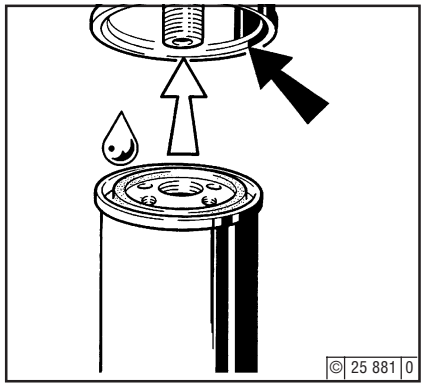

- Clean any dirt from filter carrier sealing surface.
- Apply light film of oil or diesel fuel to rubber gasket of new fuel filter cartridge.
- Manually screw in new cartridge until gasket is flush.

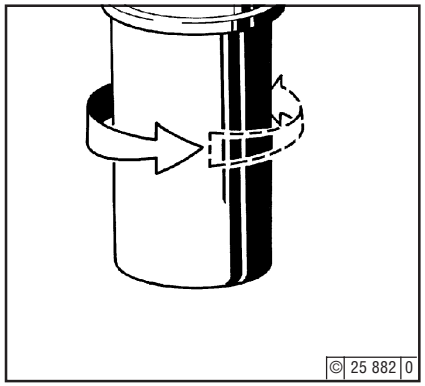

- Tighten fuel filter cartridge with final half-turn.
- Open fuel shut-off valve.
- Check for leaks.

Keep naked flames away when working on the fuel system. Do not smoke!

The fuel system does not need to be bled.

C 2001

6.2.2 Clean / Replace Fuel Filter (Cup)

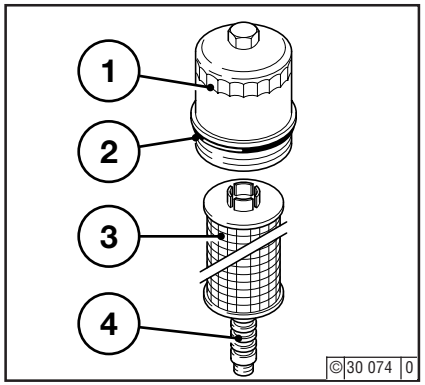

- Switch off engine.
- Loosen fuel oil filter cover 1 and unscrew in anticlockwise direction.
- Carefully loosen paper filter cartridge 3 upwards from guide 4.
- Catch any escaping fuel.
- Replace paper filter cartridge 3.
- Clean any dirt from sealing surface of filter carrier and fuel filter cover 1 and from guide 4.
- Replace and lightly oil rubber gasket 2.
- Carefully insert new paper filter cartridge 3 into guide 4.
- Tighten fuel filter cover 1 in clockwise direction (25 Nm).
- Start engine.
- Check fuel filter attachment for leaks.

Keep naked flames away when working on the fuel system. Do not smoke!

6.2.3 Clean Strainer of Fuel Filter

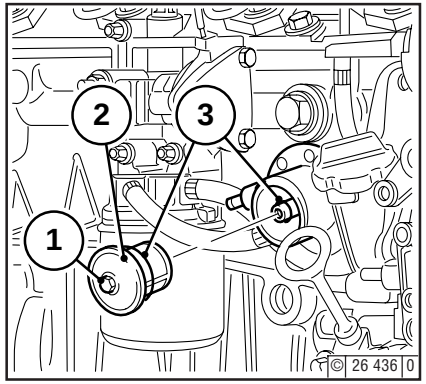

- Close fuel shut-off valve.
- Loosen and unscrew hexagonal nut 1.
- Remove fuel strainer cover 2 (cover and strainer, one unit).
- Clean fuel strainer 2 with diesel fuel. Replace if necessary.
- Place seal 3 in position.
- Mount fuel strainer cover 2.
- Tighten hexagonal screw 1.
- Check for leaks.

Keep naked flames away when working on the fuel system. Do not smoke!

6.2.4 Change Fuel Leakage Line

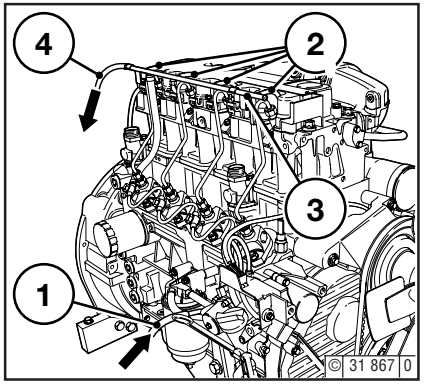

- Close fuel shut-off valve.
- Disconnect rubber hoses 3 from injection valves.
- Disconnect rubber hose 1 from fuel tank.
- Disconnect rubber hoses 4, 3 and 1 from unions 2 and dispose of in an environmentally friendly manner.
- Connect new rubber hoses 4, 3 and 1 to unions 2.
- Connect rubber hoses 3 to injection valves.
- Connect rubber hose 1 to fuel tank.
- Open fuel shut-off valve.
- Check for leaks after start-up.

C 2001

6.3.1 Cleaning Intervals

- Amount of contamination in cooling system depends on engine application.
- Oil and fuel residues on engine increase risk of contamination. Therefore pay special attention to leaks if engine is used in dusty environments.
- Serious contamination can occur, for example:
  - on construction sites where there is a high level of air-borne dust.
  - in harvesting applications where there are high concentrations of chaff and chopped straw in vicinity of machine.
- Because applications vary, cleaning intervals have to be determined from case to case. Cleaning intervals given in table on right can be used as a guide.

Checking or cleaning intervals Guideline values OH	Engine application
2000	Ships, generating sets in enclosed areas, pumps.
1000	Vehicles on paved roads
500	Tractors, fork-lift trucks, mobile generating sets
250	Vehicles on construction sites and unpaved roads, construction machines, compressors, underground mining units
125	Agricultural machines, tractors in harvesting applications

6.4.1 Cleaning Intervals

- Amount of dirt in air cleaner depends on amount of dust in air and size of air cleaner used. If high level of dust is anticipated, cyclone-type precleaner can be fitted to air cleaner.
- Cleaning intervals will have to be determined from case to case.
- If dry type air filters are used, cleaning should only be carried out according to service indicator or service switch.
- Air cleaner servicing is needed when:
  - **Service indicator**
    red signal 1 is fully visible when engine is off.
  - **Service switch**
    yellow pilot light comes on when engine is running.
- pressing button on service indicator. Service indicator is now ready for operation again.

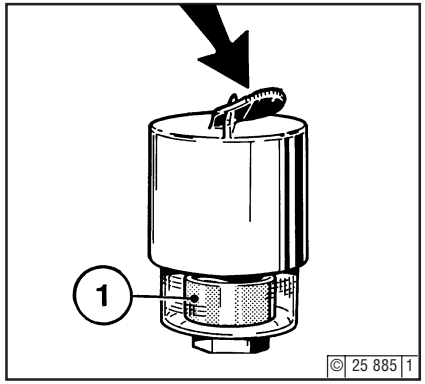

6.4.2 Emptying Cyclone-Type Precleaner

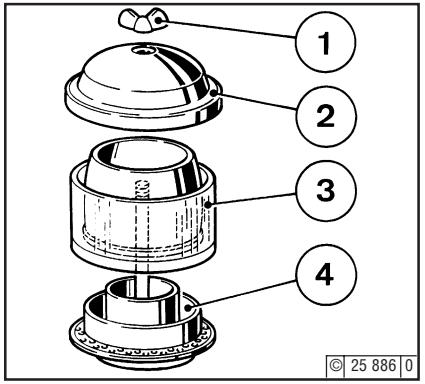

- Undo wing nut 1 and remove cover 2.
- Remove collector bowl 3 from lower section 4 and empty. Clean leaves, straw and other foreign matter from lower section of pre-cleaner.
- Reposition collector bowl 3 onto lower section 4, fasten cover 2 in place by tightening wing nut 1.

Never fill collector bowl with oil. Replace collector bowl if damaged.

6.4.3 Dry Type Air Cleaner

Discharge Valve

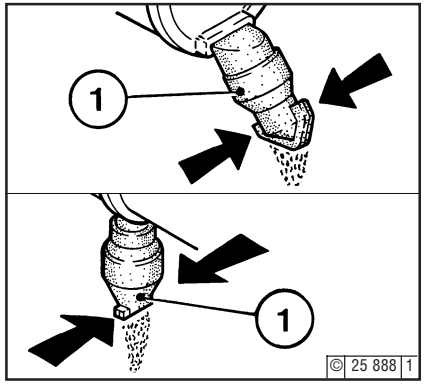

- Empty dust discharge valve 1 by pressing apart lips of discharge slot as indicated by arrows.
- Clean discharge slot from time to time.
- Remove any caked dirt by pressing together upper section of valve.

Filter Cartridges

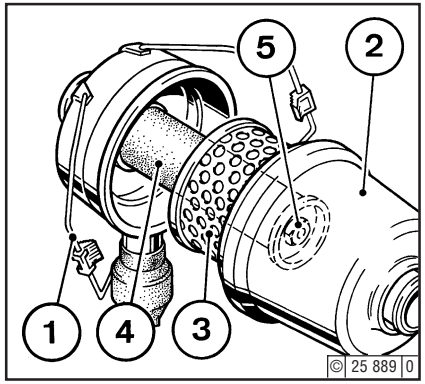

- Undo clip fasteners 1.
- Take off hood 2 and remove cartridge 3.
- Clean cartridge, replace at least once a year.
- Clean cartridge 3.
  Using dry compressed air (max. 5 bar), blow out from inside to outside (or in difficult cases, tap out, taking care not to damage cartridge, or wash according to manufacturer's instructions).
- Gaskets on filter cartridge can become damaged through regular removal and replacement. Check paper filter (light showing through) and gaskets for damage.
  Replace if necessary.
- After five cleaner services or after two years at latest, replace safety cartridge 4 (never clean).
  To do so:
  - Undo hex nut 5 and remove cartridge 4.
  - Install new cartridge, fit and tighten hex nut.
- Install cartridge 3, replace hood 2 and do up clip fasteners 1.

Never clean filter cartridge with petrol or hot fluids.

6.5.1 Check V-belt

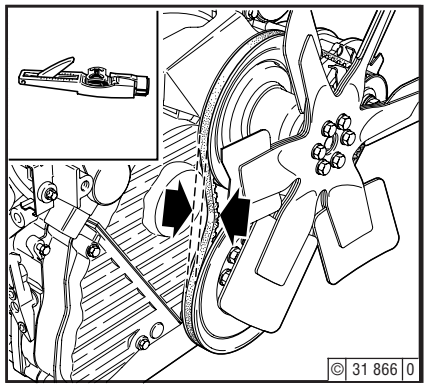

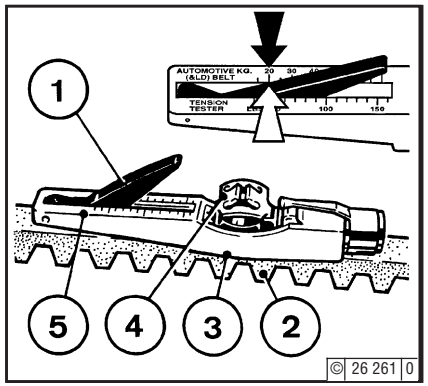

- Visually inspect entire V-belt for damage.
- Replace damaged V-belts.
- After installing new belts, run engine for 15 minutes, then check belt tension.
- To check tension of V-belt, use tension gauge (see 9.3).
  - Place indicator arm 1 into gauge.
  - Position guide 3 on V-belt 2, midway between pulleys, with stop against edge of belt.
  - Push slowly on black pad 4 at right angles to V-belt 2 until spring is heard or felt to trigger.
  - Carefully remove gauge without altering position of indicator arm 1.
  - Read off value where black indicator arm 1 intersects scale 5 (arrow). For settings, see 9.1.
  - If necessary, retension belt and measure again.

Check, tension and change belts only with engine off. Refit belt guard, if provided.

After installing new belts, run engine for 15 minutes, then check belt tension.

6.5.2 Tensioning Alternator Belts

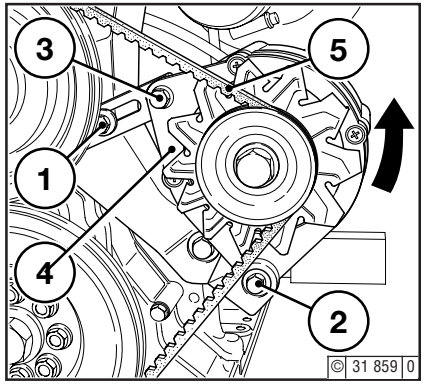

- Slacken off bolts 1, 2 and 3.
- Adjust alternator 4 in direction of arrow by turning bolt 3 until correct belt tension is achieved.
- Retighten bolts 1, 2 and 3.

Check, tension and change belts only with engine off. Refit belt guard, if provided.

6.5.3 Changing Alternator Belts

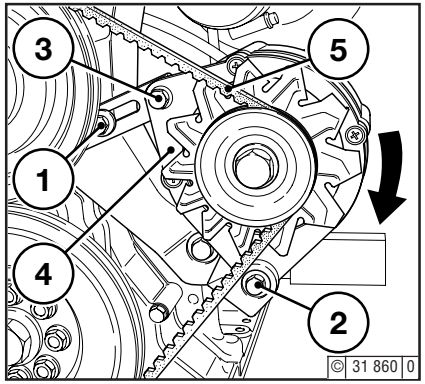

- Slacken off bolts 1, 2 and 3.
- Adjust alternator 4 in direction of arrow by turning bolt 3.
- Remove and replace belt.
- Adjust alternator 4 against direction of arrow by turning bolt 3, until correct belt tension is achieved.
- Retighten bolts 1, 2 and 3.

6.6.1 Check Valve Clearance, adjust if necessary

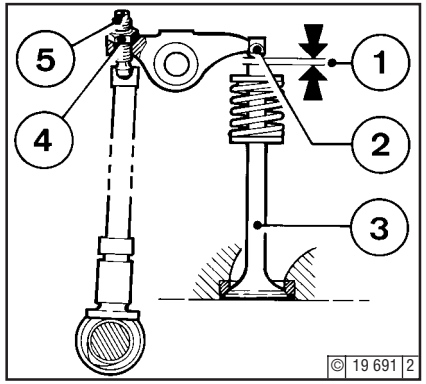

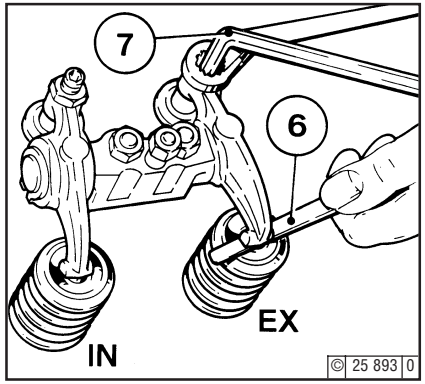

- Remove cylinder head cover.
- Position crankshaft as per schematic, see 6.6.1.1.
- Before adjusting valve clearance, allow engine to cool down for at least 30 minutes. Oil temperature should be below 80°C.
- Check valve clearance 1 between rocker arm / tappet contact face 2 and valve stem 3 with feeler gauge 6 (there should be only slight resistance when feeler blade is inserted).
  For permissible valve clearance, see 9.1.
- Adjust valve clearance if necessary:
  - Release locknut 4.
  - Use Allan key 7 to turn setscrew 5 so that correct clearance is attained after locknut 4 has been tightened.
- Check and adjust valve clearance on all cylinders.
- Reinstall cylinder head cover, with new gasket if necessary.

6.6.1.1 Valve Clearance Adjustments Schematic

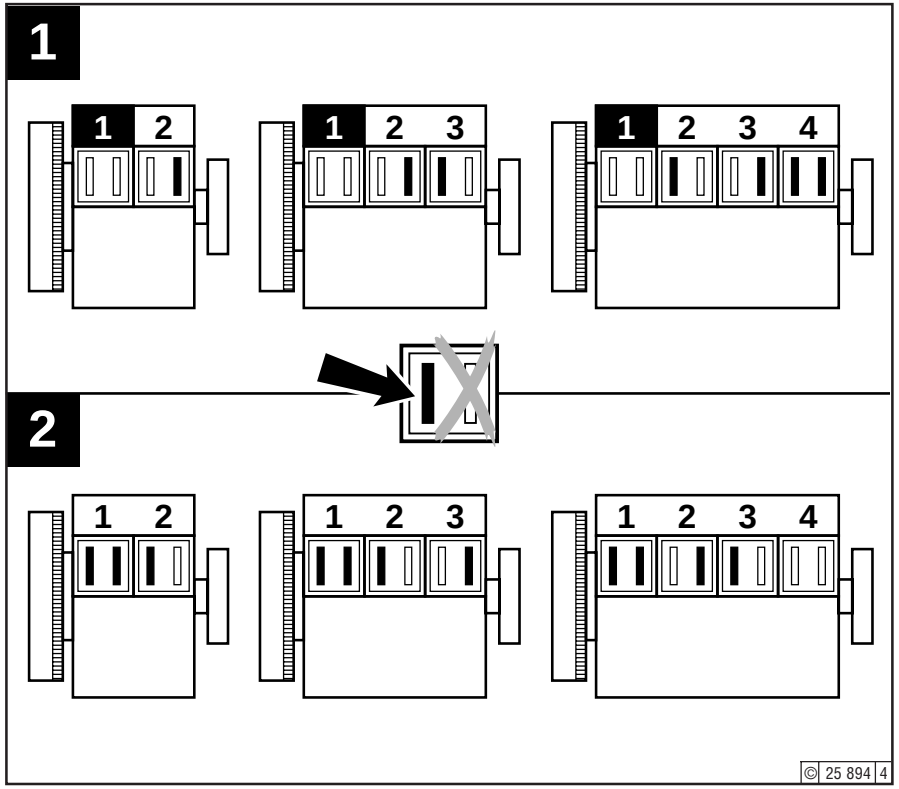

- **Crankshaft Position 1:**
  Turn crankshaft until both valves in cylinder 1 overlap (exhaust valve about to close, inlet valve about to open). Adjust clearance of valves **marked in black** on schematic. Mark respective rocker arm with chalk to show that adjustment has been carried out.

- **Crankshaft Position 2:**
  Turn crankshaft one full revolution (360°). Adjust clearance of valves **marked in black** on schematic.

6

6.7.1 Battery

6.7.1.1 Check Battery and Cable Connectors

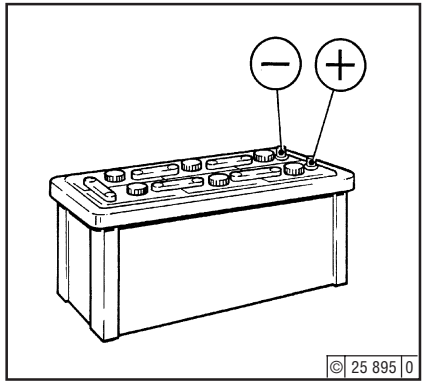

- Keep battery clean and dry.
- Undo dirty clamps.
- Clean terminal posts (+ and -) and clamps of battery, and grease with acid-free and acid-resistant grease.
- When reassembling, ensure that clamps make good contact. Tighten clamp bolts hand-tight.

6.7.1.2 Check Electrolyte Level

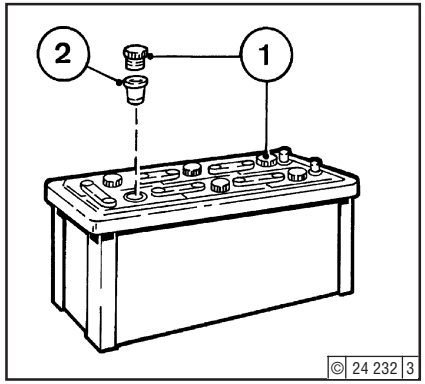

- Remove sealing caps 1.
- If testers 2 are present:
  Electrolyte level should reach base of these.
- Without testers:
  Electrolyte level should be 10-15 mm above top of plates.
- If necessary, top up with distilled water.
- Screw sealing caps back in.

6.7.1.3 Check Electrolyte Density

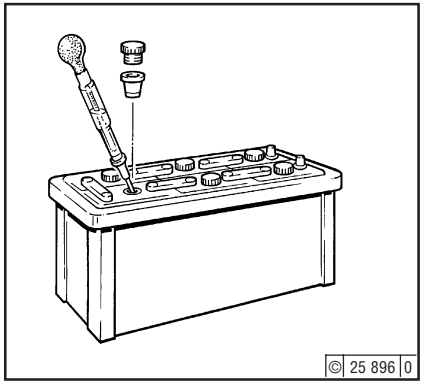

- Measure electrolyte density of individual cells with commercial hydrometer.

  Hydrometer reading (see table on following page) indicates battery's state of charge.
  During measurement, temperature of electrolyte should preferably be +20°C.

Electrolyte density				
in [kg/ l]		in [°Bé (Baumé scale)*]		Charge status
Normal	Tropical	Normal	Tropical	
1.28	1.23	32	27	well charged
1.20	1.12	24	16	semi-charged, re-charge
1.12	1.08	16	11	discharged, immediately charge

*Measurement of electrolyte density in °Bé (Baumé scale) is out of date and rarely used today.

The gases emitted by the battery are explosive! Keep sparks and naked flames away from the battery!
Do not allow battery acid to come into contact with skin or clothing!
Wear protective goggles!
Do not rest tools on the battery!

6.7.2 Rotary Current Alternator

Notes on the three-phase system:

- Never disconnect cables between battery, alternator and regulator while engine is running.
- If, however, it is necessary to start and operate engine without battery, disconnect regulator from alternator before starting.
- Be sure not to confuse battery terminals.
- Replace defective charge pilot lamp bulb immediately.
- When washing engine, cover up alternator and regulator.
- Touching lead against frame to check whether it is live must not, under any circumstances, be carried out with three-phase electrical systems.
- In case of electric welding, connect ground terminal on welder directly to piece being welded.

6.7.3 Transportation Shackles

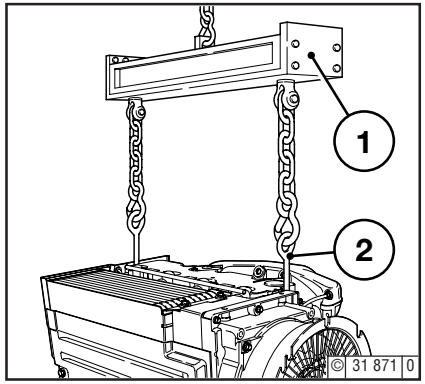

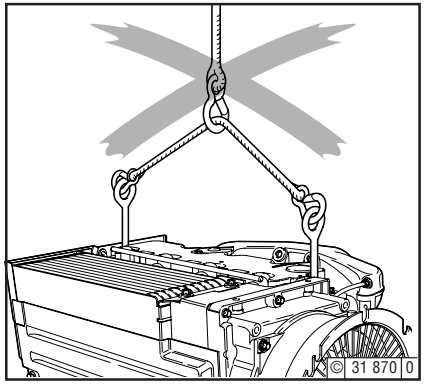

- Always use proper lifting tackle 1 when transporting engine.
- After transportation and before commissioning of engine: remove attachment eyes 2.

Use only correct lifting gear.

6.8.1 Engine Cleaning

Preperation

- Switch off engine.
- Remove engine covers and cooling air hood. Replace them after cleaning and before test run.
- Cover electrical / electronic components and connections (e.g. alternator, starter, governor, solenoid).

Using compressed air

- Blow air through engine, taking particular care not to damage cooler and cooling fins (begin to blow through air from exhaust side).
  Remove dirt which has blown into interior space.

Using cold-cleaning compound

- Spray engine with commercial cold-cleaning compound and allow to react for approx. 10 mins.
- Spray-clean engine with strong water jet, repeat if necessary.
- Allow engine to run warm so that remaining water evaporates.

Using high-pressure device

- Clean engine with steam jet (max. spray pressure of 60 bar, max. steam temperature of 90ºC).
- Allow engine to run warm so that remaining water evaporates.

Clean the engine only when the engine is switched off.

7.1 Fault Table

- Faults are often caused by engine not being properly operated or maintained.
- Each time fault occurs, check whether all operating and servicing regulations have been complied with.
- Corresponding fault table can be found on adjacent page.
- If you cannot ascertain cause of a fault or cannot rectify fault, please contact DEUTZ SERVICE.

Faults											Measures	
Engine does not start or is difficult to start											Check	Ch
	Engine starts, but runs irregularly or fails										Adjust	A
		Engine becomes excessively hot. Temperature warning system responds									Replace	Rp
			Engine output is deficient								Clean	Cl
				Engine does not run on all cylinders							Top up	T
					Engine oil pressure is non-existent or excessively low						Reduce	Rd
						Engine oil consumption excessive						
							Engine smokes - blue					
								- white				
									- black			
										Cause	**Section**	
●										Not declutched (where possible)	Engine Operation	Ch
●								●		Below starting limit temperature		Ch
		●			●					Oil level too low		T
		●	●			●	●			Oil level too high		Ch
					●	●	●			Excessive inclination of engine		Rd
●					●					Incorrect lube oil SAE class or quality	Operating media	Rp
●	●		●					●		Fuel quality not as per operating manual		Rp
		●	●						●	Air cleaner clogged / turbocharger defective	Combustion air	Ch / Rp
		●	●						●	Air cleaner service switch / indicator defective		Ch / Rp
									●	CPD * defective		Ch
			●						●	Charge air line leaking		Ch
		●								Oil cooler panels clogged		Ch / Cl
		●								Cooling fan defective, split or loose V-belt	Cooling system	Ch / Rp
		●								Cooling air temperature rise / heating short circuit		Ch
		●								Resistance in cooling system too great / through-flow quantity too small		Ch
●										Battery defective or discharged	Electrics	Ch / T

*CPD = Charge pressure-dependent full-load stop

Faults											Measures	
Engine does not start or is difficult to start											Check	Ch
	Engine starts, but runs irregularly or fails										Adjust	A
		Engine becomes excessively hot. Temperature warning system responds									Replace	Rp
			Engine output is deficient								Clean	Cl
				Engine does not run on all cylinders							Top up	T
					Engine oil pressure is non-existent or excessively low						Reduce	Rd
						Engine oil consumption excessive						
							Engine smokes - blue					
								- white				
									- black			
										Cause	**Section**	
●										Electric cable connections to starter electrical system loose or oxidised	Electrics	Ch
●										Starter defective or pinion does not engage		Ch
●										Solenoid defective (release switch)		Ch
●	●		●					●	●	Incorrect valve clearance	Engine	A
	●		●	●						Injection line leaks		Ch
●	●	●	●	●				●	●	Injection valve defective		Ch / Rp

8.1 Preservation

If the engine is to remain idle for an extended period of time, it is necessary to take protective measures to prevent rusting. The preservative measures described here will protect the engine for up to 6 months.
The procedure will have to be reversed before the engine is recommissioned.

- Anti-corrosion oils to specification:
  MIL-L-21260B
  TL 9150-037/2
  Nato Code C 640 / 642
- Anti-corrosion media for exterior protection only to specification:
  Nato Code C 632
- Recommended cleaning agent to remove preservatives:
  Petroleum benzine
  (hazardous materials class A3)

8.1.1 Preserving Engine

- Clean engine using high-pressure equipment (or with cold-cleansing agent in emergency).
- Run engine until warm, then turn off.
- Drain engine oil (see 6.1.2) and fill with anti-corrosion oil.
- If necessary, clean oil bath cleaner (see 6.4.3) and fill with anti-corrosion oil.
- Drain fuel tank.
- Make up a mixture of 90% diesel fuel and 10% anti-corrosion oil, and refill fuel tank.
- Allow engine to run for approx. 10 mins.
- Switch off engine.
- Turn engine over manually several times to preserve cylinders and combustion chamber.
- Remove V-belts and store in wrapped condition.
- Spray grooves on V-belt pulleys with anti-corrosion spray.
- Close intake ports and exhaust ports.

8.1.2 Removing Engine Preservatives

- Remove anti-corrosion agent from grooves in V-belt pulleys.
- Install V-belt, retension after brief operation if necessary, see 6.5.
- Remove covers from intake port and exhaust port.
- Commission engine, see also 5.1, note 2.

Technical Specification

9

9.1 Engine Specifications and Settings
9.2 Torque Wrench Settings
9.3 Tools

9

Model		F2L 2011	F3L 2011	F4L 2011
Number of cylinders		2	3	4
Cylinder arrangement		vertical in line		
Bore	[mm]	94		
Stroke	[mm]	112		
Total displacement	[cm^3]	1554	2331	3108
Compression ratio	[ε]	19		
Working cycle		4-stroke diesel engine		
Combustion system		Naturally aspirated engine with direct injection		
Direction of rotation		On left when looking at flywheel		
Weight incl. integral cooling system to DIN 70020-A (without starter, with alternator)	approx. [kg]	175	217	256
Engine output	[kW (hp)]	1)		
Speed	[rpm]	1)		
Lubrication		Pressure lubrication		
SAE oil		20 W 20		
Maximum oil temperature in oil pan	[°C]	130		
Min. oil pressure in warm condition, oil temperature 110°C at: 900 rpm (low idling speed)	[bar]	1.4 3)		
1800 rpm	[bar]	2.2 3)		
max. 2800 rpm	[bar]	3 3)		
Oil change quantity (oil pan) approx.	[l]	6 2)	5.5 2)	10 2)
Oil change quantity with filter (standard 0.5 l)	approx. (l)	6.5 2)	6 2)	10.5 2)
Valve clearance with cold engine (Engine cooling time at least 30 min.: oil temperature should be below 80°C).	[mm]	Inlet 0.3 +0.1 / Exhaust 0.5 +0.1		
Start of feed	[°crankshaft BTDC]	1)		
Injector opening pressure: vehicle/unit	[bar]	210 +8		
Firing order of engine		1 - 2	1 - 2 - 3	1 - 3 - 4 - 2
V-belt tension: pretension / retension (after engine has been running under load for 15 mins)	[N]	450 / 350 ±20		

1) Engine power, speed, start of delivery are stamped on engine rating plate, see also 2.1.
2) Approx. values can vary depending on sump and/or cooler design (external cooling system). **Upper oil dipstick mark is always authoritative.**
3) Values for engines without engine oil heating.

Model		BF3L 2011	BF4L 2011
Number of cylinders		3	4
Cylinder arrangement		vertical in line	
Bore	[mm]	94	
Stroke	[mm]	112	
Total displacement	[cm^3]	2331	3108
Compression ratio	[ε]	17.5	
Working cycle / Combustion system		Four-stroke diesel with turbocharging and direct fuel injection	
Direction of rotation		On left when looking at flywheel	
Weight without cooling system			
Weight without starter, with alternator as per DIN 70020-A approx.	approx. [kg]	222	257
Engine output	[kW (hp)]	1)	
Speed	[rpm]	1)	
Lubrication		Pressure lubrication	
SAE oil		20 W 20	
Maximum oil temperature in oil pan	[°C]	130	
at: 900 rpm (low idling speed)	[bar]	1.4 3)	
1800 rpm	[bar]	2.2 3)	
max. 2800 rpm	[bar]	3 3)	
Oil change quantity (oil pan without cooling system) ca.	[l]	7.5	10 2)
Oil change quantity with filter (Standard 0.5 l)	approx. (l)	8	10.5 2)
Valve clearance with cold engine			
(Engine cooling time at least 30 min.: oil temperature should be below 80°C).	[mm]	Inlet $0.3^{+0.1}$ / Exhaust $0.5^{+0.1}$	
Injector opening pressure: vehicle/unit	[bar]	210^{+8}	
Start of feed	[°crankshaft BTDC]	1)	
Firing order of engine		1 - 2 - 3	1-3-4-2
V-belt tension: pretension / retension (after engine has been running under load for 15 mins):	[N]	450 / 350 ±20	

1) Engine power, speed, start of delivery are stamped on engine rating plate, see also 2.1.
2) Approx. values can vary depending on sump and/or cooler design (external cooling system). **Upper oil dipstick mark is always authoritative.**
3) Values for engines without engine oil heating.

Model		F2M 2011	F3M 2011	F4M 2011
Number of cylinders		2	3	4
Cylinder arrangement		vertical in line		
Bore	[mm]	94		
Stroke	[mm]	112		
Total displacement	[cm³]	1554	2331	3108
Compression ratio	[ε]	19		
Working cycle		4-stroke diesel engine		
Combustion system		Naturally aspirated engine with direct injection		
Direction of rotation		On left when looking at flywheel		
Weight without cooling system		Refer to head-office		
(without starter, with alternator) approx.	approx. [kg]	169	210	248
Engine output	[kW (hp)]	1)		
Speed	[rpm]	1)		
Lubrication		Pressure lubrication		
SAE oil		20 W 20		
Maximum oil temperature in oil pan	[°C]	130		
Min. oil pressure in warm condition, oil temperature 110°C at: 900 rpm (low idling speed)	[bar]	1.4 3)		
1800 rpm	[bar]	2.2 3)		
max. 2800 rpm	[bar]	3 3)		
Engine with Thermostat				
Oil change quantity without external cooler (see 3.1.1.2)/without filter approx.	[l]	5.5 2)	10 2)	
Oil change quantity without external cooler (see 3.1.1.2) + filter replacement (standard 0.5 litre) approx.	[l]	6 2)	10.5 2)	
Genset Engine without Thermostat:				
Oil change quantity including external cooler (see 3.1.1.3)/without filter approx.	[l]	8.5 2)	13 2)	
Oil change quantity including cooler (see 3.1.1.3) + filter replacement (standard 0.5 litre) approx.	[l]	9 2)	13.5 2)	
Valve clearance with cold engine (Engine cooling time at least 30 min.: oil temperature should be below 80°C).	[mm]	Inlet 0.3 +0.1 / Exhaust 0.5 +0.1		
Start of feed	[°crankshaft BTDC]	1)		
Injector opening pressure: vehicle/unit	[bar]	210 +8		
Firing order of engine		1-2	1 - 2 - 3	1 - 3 - 4 - 2
V-belt tension: pretension / retension (after engine has been running under load for 15 mins):	[N]	450 / 350 ±20		

1) Engine power, speed, start of delivery are stamped on engine rating plate, see also 2.1.
2) Approx. values can vary depending on sump and/or cooler design (external cooling system). **Upper oil dipstick mark is always authoritative.**
3) Values for engines without engine oil heating.

Model		BF3M 2011	BF4M 2011
Number of cylinders		3	4
Cylinder arrangement		vertical in line	
Bore	[mm]	94	
Stroke	[mm]	112	
Total displacement	[cm³]	2331	3108
Compression ratio	[ε]	17.5	
Working cycle		4-stroke diesel engine	
Combustion system		Turbocharging and direct injection	
Direction of rotation		On left when looking at flywheel	
Weight without cooling system		Refer to head-office	
(without starter, with alternator) approx.	[kg]	215	250
Engine output	[kW (hp)]	1)	
Speed	[rpm]	1)	
Lubrication		Pressure lubrication	
SAE oil		20 W 20	
Maximum oil temperature in oil pan	[°C]	130	
Min. oil pressure in warm condition, oil temperature 110°C at: 900 rpm (low idling speed)	[bar]	1.4 3)	
1800 rpm	[bar]	2.2 3)	
max. 2800 rpm	[bar]	3 3)	
Engine with Thermostat			
Oil change quantity without external cooler (see 3.1.1.2) / without filter approx.	[l]	7.5	10 2)
Oil change quantity without external cooler (see 3.1.1.2) + filter replacement (standard 0.5 litre) approx.	[l]	8	10.5 2)
Genset Engine without Thermostat:			
Oil change quantity including external cooler (see 3.1.1.3) / without filter approx.	[l]	11	13.5 2)
Oil change quantity including cooler (see 3.1.1.3) + filter replacement (standard 0.5 litre) approx.	[l]	11.5	14 2)
Valve clearance with cold engine (Engine cooling time at least 30 min.: oil temperature should be below 80°C).	[mm]	Inlet 0.3 +0.1 / Exhaust 0.5 +0.1	
Start of feed	[°crankshaft BTDC]	1)	
Injector opening pressure: vehicle/unit	[bar]	210 +8	
Firing order of engine		1-2-3	1-3-4-2
V-belt tension: pretension / retension (after engine has been running under load for 15 mins):	[N]	450 / 350 ±20	

1) Engine power, speed, start of delivery are stamped on engine rating plate, see also 2.1.
2) Approx. values can vary depending on sump and/or cooler design (external cooling system). **Upper oil dipstick mark is always authoritative.**
3) Values for engines without engine oil heating.

Installation location	Pre-tension [Nm]			Re-tension [Nm]				Total	Comments
	1st stage	2nd stage	3rd stage	1st stage	2nd stage	3rd stage	4th stage	[Nm]	
Cylinder head cover								8.5	
Cylinder head cover								8.5	
Rocker arm adjustment screw								21	
Intake manifold								8.5	
Foot Rigid suspension	30			45					
Foot Elastic suspension								106	
Air intake pipe								21	
Exhaust manifold								22	
Oil drain plug								55	
Oil pan (sheet metal)								21	
Oil pan (cast)								31	
Injection line attachment								30	
Injection valve attachment								21	TORX
Lube oil filter cartridge								27	on engine or separate
Threaded pipe union								4	

TORX

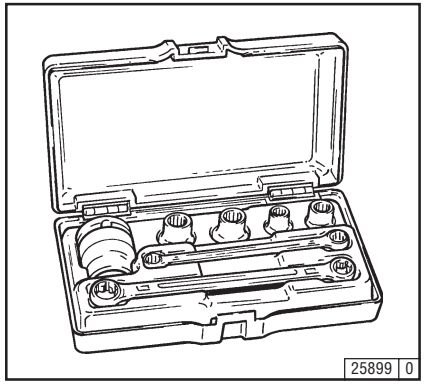

A TORX BN. 8189 screw set is used with engines in the 1011 series.
This system was chosen because of the many advantages it offers:

- Outstanding accessibility to bolts.
- High load transfer when loosening and tightening.
- Almost impossible for socket to slide off or break, thereby practically ruling out risk of injury.

TORX tools can be ordered from:

FA.WILBÄR
Postfach 14 05 80
D-42826 Remscheid

V-belt tension gauge

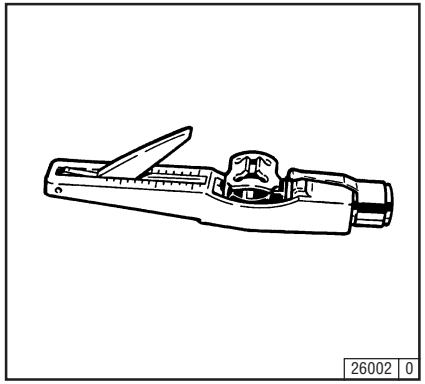

The V-belt tension gauge can be obtained under order number **8115** from:

FA.WILBÄR
Postfach 14 05 80
D-42826 Remscheid

Notice

Notes

Warnings to Place on Equipment

CALIFORNIA

Proposition 65 Warning

Diesel engine exhaust and some of its constituents are known to the State of California to cause cancer, birth defects, and other reproductive harm.

Warning in the Manual

CALIFORNIA

Proposition 65 Warning

Diesel engine exhaust and some of its constituents are known to the State of California to cause cancer, birth defects, and other reproductive harm.

or

CALIFORNIA

Proposition 65 Warning

Diesel engine exhaust and some of its constituents are known to the State of California to cause cancer, birth defects, and other reproductive harm.

Notes

California Proposition 65 Information

To California customers and to customers selling diesel engine equipment into or for use in California.

Proposition 65, a California law, requires warnings on products which expose individuals in California to chemicals listed under that law, including certain chemicals in diesel engine exhaust.

Obligations of Manufactures of Diesel-Powered Off-Road Equipment. The California Superior Court has approved either of the following two methods of compliance with Proposition 65 requirements by manufactures of off-road equipment containing diesel engines. (The court order containing these provisions is attached.)

1. **On-Equipment Warning.** Place the warning pictured in attachment 1 on all equipment shipped by you into or for sale in California after January 1, 1996. The warning must be in a location where it is easily visible to the operator of the equipment when (s)he is operating the equipment. The warning must be secured to the equipment. If warnings or operating instructions are provided through a digital display, you may usee that method of providing warning.
2. **Operator Manual Warning.** When the operator manual is next revised or by December 31, 1995 whichever is earlier, place the warning in attachment 2 in the operator manual. The warning may be either printed in the manual or on a sticker.

The warning must appear in one of the following locations:

- Inside The front cover
- Inside the back cover
- Outside the front cover
- Outside the back cover
- As the first page of text

Under either alternative, the warning must appear in the same size, print and format as the attachment selected or be of an equally conspicuous size and format. If the warning is provided in an on-screen display, the warning must contain the language in the attachment and must be provided at the time of or in connection with ignition in the same manner as other safety warnings electronically communicated on screen.

Obligation of Resellers of Diesel Engines. This letter must accompany any loose diesel engine sold in California.
Should you have any questions, please call Deutz Corporation Product Support Department.

Knowing it's DEUTZ

DEUTZ has always stood for excellence in motor construction, pioneering many developments in the industry. As an independent motor manufacturer, we offer — worldwide — a comprehensive range of diesel and gas motors spanning from 4kW to 7,400kW. Our products are perfectly tailored to meet our customers' individual requirements.

Over 1.4 million DEUTZ motors do their job reliably all over the world. We are determined to preserve the high standard of performance and dependability of our motors, thus keeping our customers satisfied at all times. Therefore we are represented worldwide through a network of highly competent service partners who will meet the needs of our customers, wherever they are.

This is why DEUTZ is not only the name for motors which pack a lot of inventive genius. DEUTZ also means reliable service and comprehensive support to enhance your motor's performance.

This index Sales & Service offers you an overview of the DEUTZ partners in your vicinity, including the products for which they are responsible and the range of services provided. But even when no direct product responsibility is mentioned, your DEUTZ partner will be happy to help you with expert advice.

The Index is constantly updated. Please ask your DEUTZ service partner for the latest edition.

DEUTZ AG — at your service.

Order-No.: 0312 0806

Order-No.: 0312 0807 (CD-ROM)

Obtainable from the local service Partner reponsible for you or from:

DEUTZ AG
Deutz-Mülheimer Str. 147-149
D-51057 Köln

Phone: 0049-221-822-0
Telefax: 0049-221-822-5304
Telex: 8812-0 khd d
http://www.deutz.de